vending machine

file immagini/ricambi/copertine/luce x2 pro.jpg NOT exists!!!!!!

spare parts manual

www.rheavendors.com tel: 0039 02 966 551 fax: 0039 02 96 55 086 email: rheavendors@rheavendors.com exclusive property of rheavendors group

cabinet

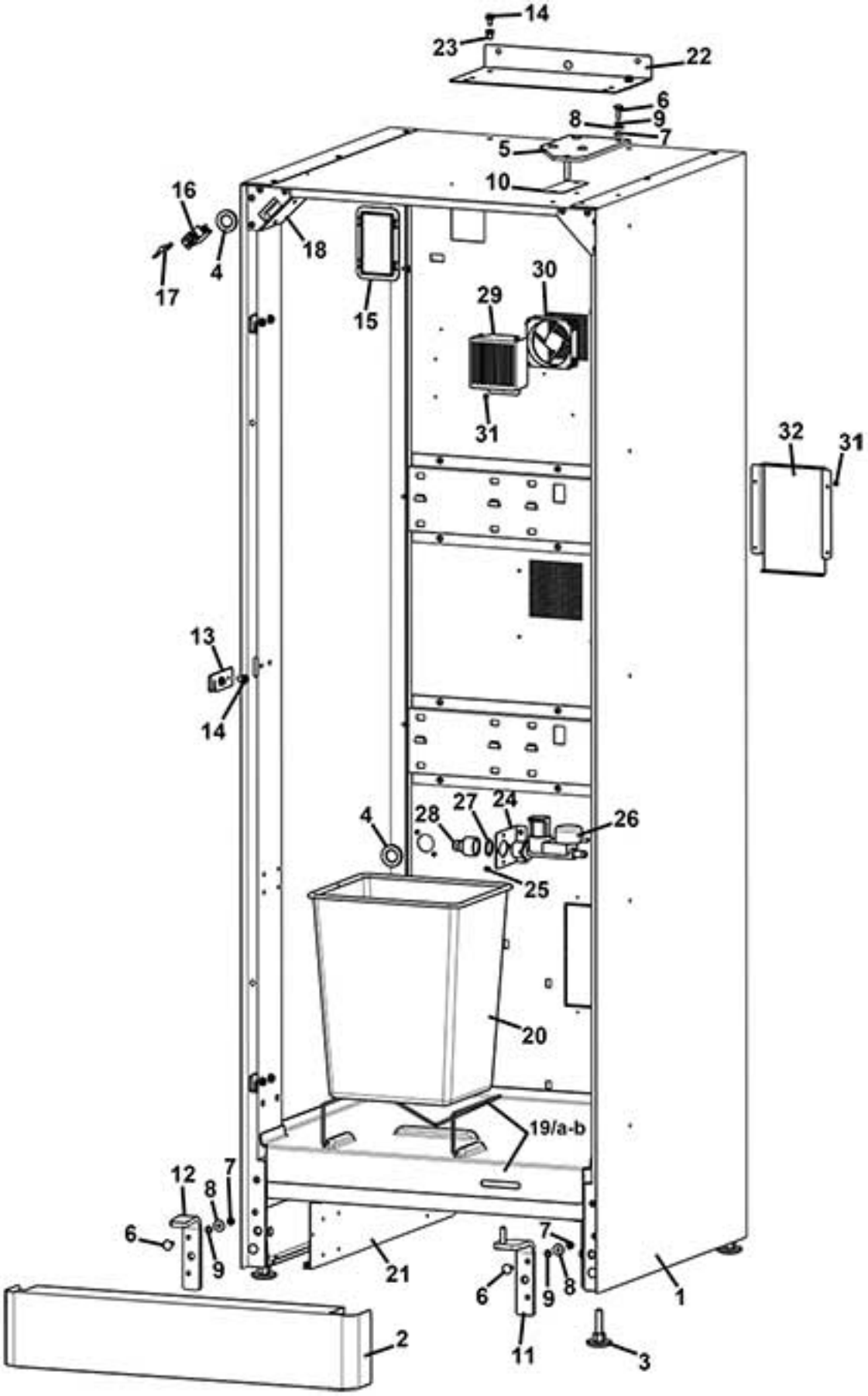

www.rheavendors.com tel: 0039 02 966 551 fax: 0039 02 96 55 086 email: rheavendors@rheavendors.com exclusive property of rheavendors group

cabinet		
Pos.	**Code**	**Description**
1	Z0010030021DACL	§CABINET RAL 9022
2/a	Z0010030055DA	KICK PLATE RAL 9022
2/b	Z0010030059NA	KICK PLATE RAL 9005
3	Z0010013208	MACHINE FOOT
4	GUA0010502	ELECTRICAL GROMMET Ø21
5	Z0010030028	UPPER HINGE
6	VIT0005802	SCREW 6X20
7	VIT0004505	NUT M6
8	VIT0003303	WASHER 6,6X18X1,5
9	VIT0003453	SPRING WASHER 6,4
10	Z0010030042	THICKNESS HINGE
11	Z0010030029	LOWER HINGE
12	Z0010030031	MACHINE FOOT
13	Z0010030015	LOCK HOOK
14	VIT0000236	SCREW HEX HEAD M6X11
15/a	Z0010030054NA	WIRING SUPPLY COVER (BLACK)
15/b	Z0010030054NA	WIRING SUPPLY COVER (BLACK)
16	ELE0002009	BIPOLAR SWITCH 15A 250V
17	Z0270011109CL	§ SERVICE KEY
18	Z0010030075	DOOR SWITCH SUPPORT
19/a	Z0010030049	BIN FRAME
19/b	Z0010032019NA	BOTTOM PROTECTION (BLACK)
20	CON0000201	BIN
21	Z0010030077	CABINET REINFORCEMENT
22	Z0010018071	MACHINE FIXING PLATE
23	VIT0005702	THREADED INSERT
24	Z0010030082	DOUBLE EV SUPPORT
25	VIT0002010	SCREW ST HEAD CAP M3.5X9.5
26	Z0110001109	INLET WATER VALVE 2W 24V DC
27	GUA0000021	OR 130 NBR AL 75 BLACK
28/a	Z0010019223	H2O INLET CONNECTOR 3/4F-3/8M
28/b	Z0810010556	H2O INLET CONNECTOR
29	Z0010030043	FAN SUPPORT
30	ELE0000463R	§ FAN 24V DC D.80
31	VIT0002009	SCREW ST HEAD CAP M3.5X6.5
32	Z0012300244NA	COVER BACK from serial 20133800000

www.rheavendors.com tel: 0039 02 966 551 fax: 0039 02 96 55 086 email: rheavendors@rheavendors.com exclusive property of rheavendors group

external door

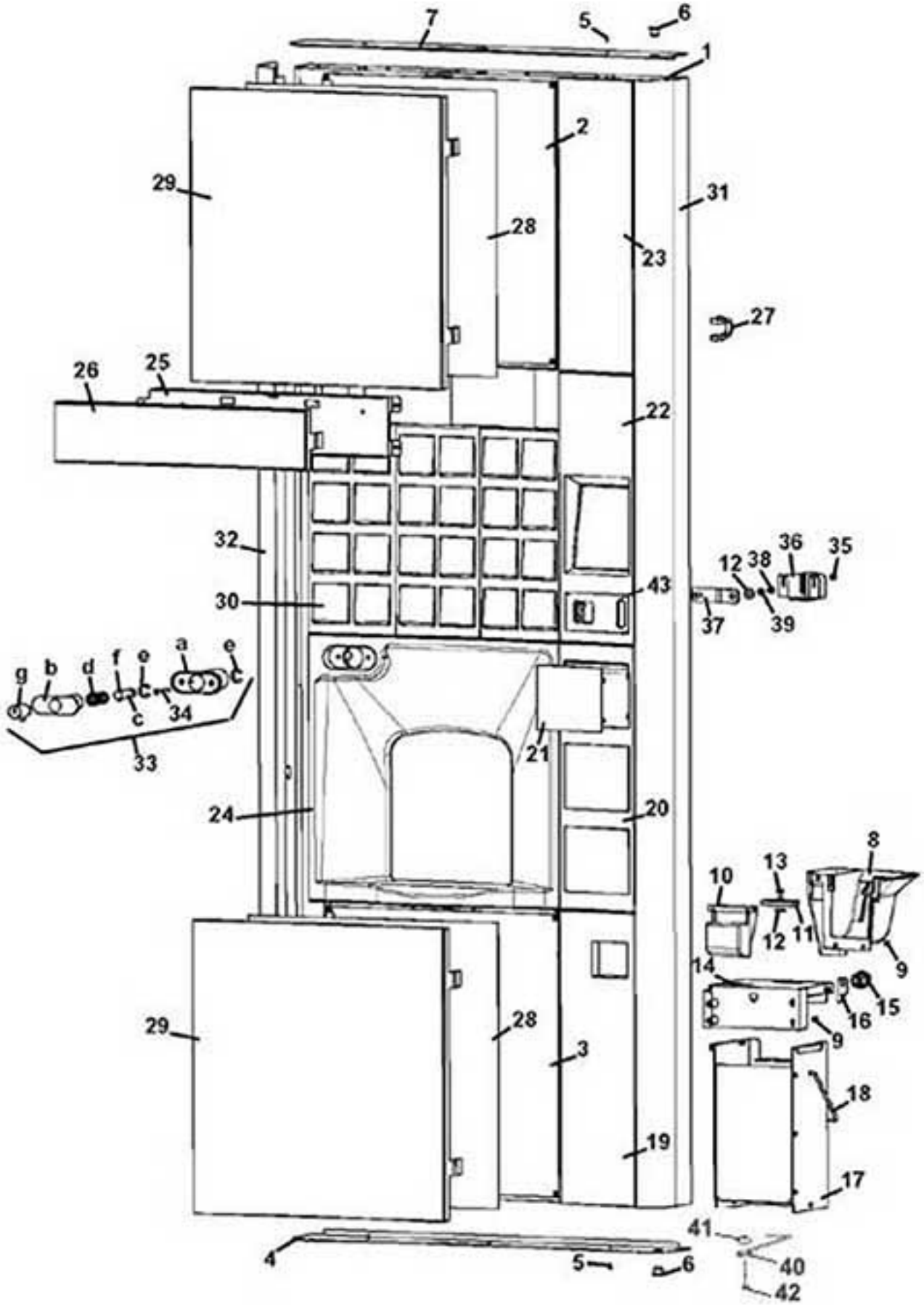

www.rheavendors.com tel: 0039 02 966 551 fax: 0039 02 96 55 086 email: rheavendors@rheavendors.com exclusive property of rheavendors group

external door		
Pos.	**Code**	**Description**
1	Z0020042005	§ DOOR
2		See table upper lighting kit
3		See table bottom lighting kit
4	Z0020042075	DOOR LOWER CLOSING PLATE
5	VIT0007020	BLIND RIVET
6	Z0020034156	DOOR HINGE BUSH
7	Z0020042061	DOOR UPPER CLOSING PLATE
8	Z0020042014CY	COINS RETURN CHUTE RAL9018
9	VIT0002401	SCREW ST HEAD CAP M3.5X9.5
10	Z0020042056XC	COINS RETURN FLAP CHROME
11	Z0020042030	COIN RETURN FLAP COUNTERWEIGHT
12	VIT0000208	SCREW HEX HEAD M5X10
13	VIT0003302	WASHER 5,5X15X1,6
14	Z0020042095	COIN BOX LID
15	SER0000010	LOCK MM20 C.3480
16	SER0001005	LOCK PLATE
17	Z0030006255CL0	§COIN BOX Include cod.Z0030006258 HOOK
18	Z0030006258	COIN BOX HOOK
19/a	Z0020042045DA	COIN RETURN FRAME RAL9022
19/b	Z0020042045NA	COIN RETURN FRAME BLACK
20/a	Z0020042044DA	INSTRUC. MODULE FRAME RAL9022
20/b	Z0020042044NA	INSTRUC. MODULE FRAME BLACK
21/a	Z0020042079	INSTRUCTION MODULE
21/b	Z0020042079ND	INSTRUCTION MODULE (BLACK)
21/c	Z0020042079DA	INSTRUCTION MODULE RAL9022
22		See table display kit
23/a	Z0020042920DA	PAY. SYSTEM PANEL RAL9022
23/b	Z0020042042NA	PAY. SYSTEM PANEL BLACK
24/a		See table 1 turret cups station
24/b		See table 2 turrets cups station
25	Z0020042055	INSTRUCTION MODULE SUPPORT
26/a	Z0020042021DA	INSTRUCTION FRAME RAL9022
26/b	Z0020042021NA	INSTRUCTION FRAME BLACK
27	Z0020042175	PLEXIGLASS HOOK
28	Z0020042320	GRAPHIC PANEL LUCE COVER
29	Z0020042015	PLEXIGLASS PICTURE
30		See table KEYBOARD
31/a	Z0020042013DA	RIGHT DOOR COVER RAL9006
31/b	Z0020042838CM	RIGHT DOOR COVER RAL9006
32/a	Z0020042058DA	LEFT DOOR COVER RAL9006
32/b	Z0020042840CM	LEFT DOOR COVER RAL9006
33_1	1150003213DA	LOCK RIELDA RAL9022
33_1/a	1150003126DA	SLEEVE (RAL9022)
33_1/b	1150002112DA	SLEEVE RAL9022
33_1/c	1150002111	PIN
33_1/d	1150002113	SPRING
33_1/e	VIT0006508	RING 10

www.rheavendors.com tel: 0039 02 966 551 fax: 0039 02 96 55 086 email: rheavendors@rheavendors.com exclusive property of rheavendors group

external door		
33_1/f	VIT0005203	DOWEL PIN 4X18
33_1/g	SER0000022	LOCK
33_2	1150003200NA	LOCK BLACK
33_2/a	1150003126NA	SLEEVE BLACK
33_2/b	1150002112NA	SLEEVE BLACK
33_2/c	1150002111	PIN
33_2/d	1150002113	SPRING
33_2/e	VIT0006508	RING 10
33/_2/f	VIT0005203	DOWEL PIN 4X18
33_2/g	SER0000003	LOCK c.7851
34	VIT0000125	SCREW COUNT FLAT HEAD M4X45
35	VIT0004815	NUT M4
36	Z0020042280	LOCK PROTECTION
37	Z0020042036	LOCK PLATE
38	VIT0003302	WASHER 5,5X15X1,6
39	VIT0003104	SPRING WASHER 5,3
40	Z0020034172	DOOR STOP
41	VIT0007102	BENZING CLIP
42	Z0020034173	DOOR STOP IN
43	Z0020042359	SELF-ADHESIVE COIN LABEL COVER

www.rheavendors.com tel: 0039 02 966 551 fax: 0039 02 96 55 086 email: rheavendors@rheavendors.com exclusive property of rheavendors group

internal door

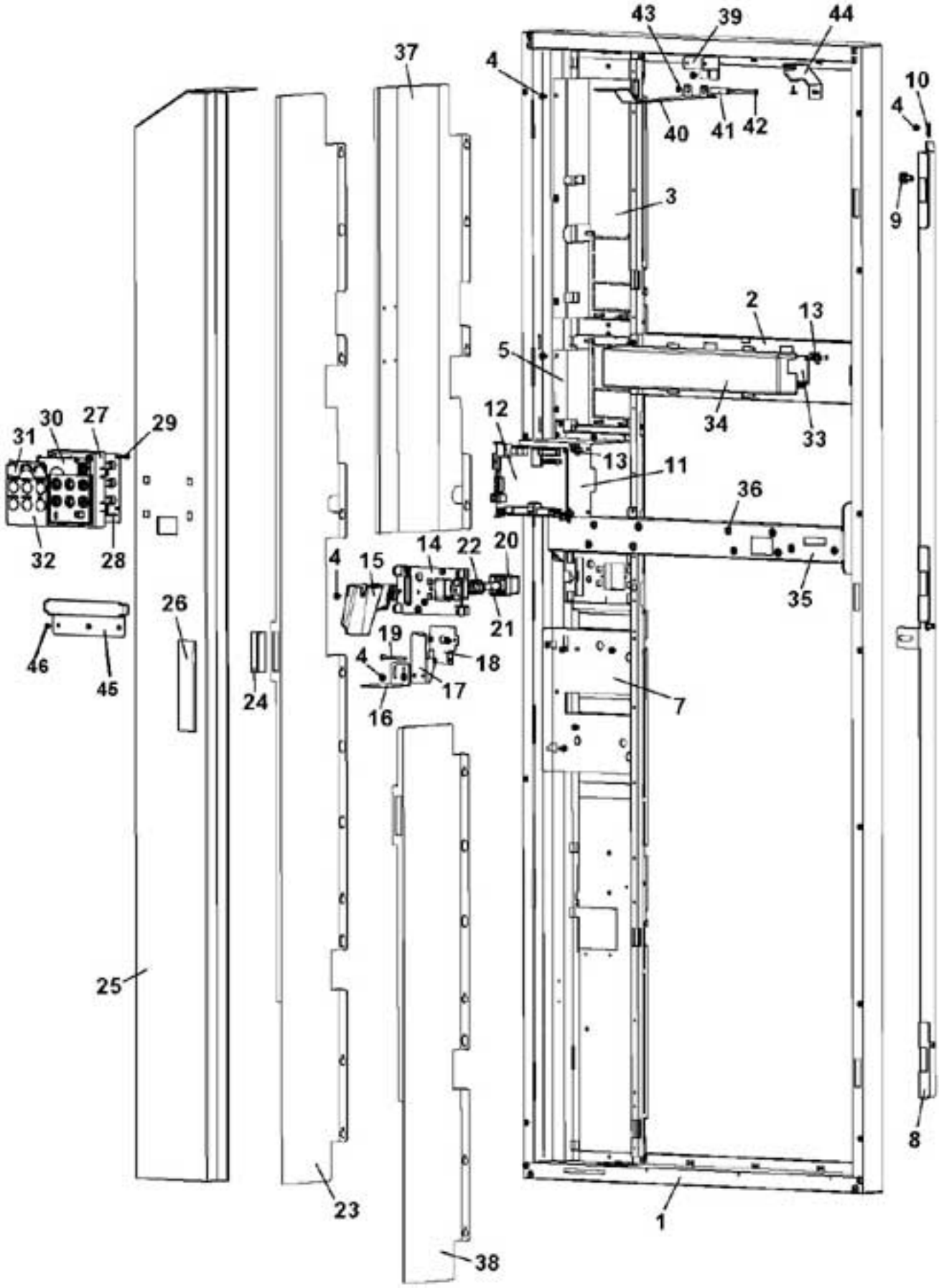

www.rheavendors.com tel: 0039 02 966 551 fax: 0039 02 96 55 086 email: rheavendors@rheavendors.com exclusive property of rheavendors group

internal door		
Pos.	**Code**	**Description**
1	Z0020042005	§ DOOR
2	Z0020042055	INSTRUCTION MODULE SUPPORT
3	Z0020042106	PAY. SYSTEM PLATE
4	VIT0002401	SCREW ST HEAD CAP M3.5X9.5
5	Z0020042149	PAYMENT SYSTEM PLATE
7	Z0020042063	PAYM SYSTEM SUPPORT
8	Z0020042913-02	DOOR BLOCK SHAFT
9	Z0020029923	FIXING SCREW
10	Z0020042911	DOOR BLOCK SHAFT SPRING
11	Z0020042103	CPU SUPPORT
12	SCH0007904	CPU BOARD (2017)
13	ELE0062003	BOARD SUPPORT
14	Z0020042083	COIN ENTRY GUIDE
15	Z0020042051CY	COINS ENTRY CHUTE RAL9018
16	Z0020042052	LOWER BRACKET
17	Z0020042057	UPPER BRACKET
18	Z0020042064	COIN RETURN BUTTON PLATE
19	Z0020034173	DOOR STOP IN
20	Z0020042062XC	COIN RETURN BUTTON CHROMO
21	Z0020034023	COIN RETURN PIN
22	4050010074	COIN RETURN BUTTON SPRING
23	Z0020042122	5C COIN BOX RETURN PROTECTION
24	ELE0000103	MAGNETIC CLICK-LOCK
25/a	Z0020042097CL	§PAYM SYSTEM COVER 5C
25/b	Z0020042919CL	§PAYM SYSTEM COVER 4C
26	Z0020034823	HANDLE
27	Z0020042172AH	PROGRAM KEYPAD SUPPORT
28	SCH0007182	PROGRAM KEYPAD
29	VIT0002469	SCREW HEAD TAP M3.5X10
30	Z0020042171	KEYBOARD COVER
31	Z0020042164	PROGRAMM LABEL
32	Z0020042165	CLEANING LABEL
33	SCH0008420	KEYPAD BOARD
34	Z0020042173NA	KEYPAD COVER BLACK
35/a		See table 1 TURRET DB SUPPORT
35/b		See table 2 TURRETS DB SUPPORT
36	VIT0000236	SCREW HEX HEAD M6X11
37	Z0020042110	PAY. SYSTEM SUPPORT COVER
38	Z0020042345R	§ PAYMENT SYSTEM COVER 4C X2
39	Z0020042124	UPPER HINGE TURRET SUPPORT
40/a	Z0020042188	TURRET 5COLUMNS UPPER HINGE
40/b	Z0020042126	TURRET 4COLUMNS UPPER HINGE
41	Z0020038167	HINGE SPACER
42	Z0020034173	DOOR STOP IN
43	VIT0007102	BENZING CLIP
44	Z0020042162	DOOR SWITCH SUPPORT
45/a	Z0020042142	INGREDIENT CANISTER SUPPORT For version 1 turret

www.rheavendors.com tel: 0039 02 966 551 fax: 0039 02 96 55 086 email: rheavendors@rheavendors.com exclusive property of rheavendors group

internal door		
45/b	Z0020042150	INGREDIENT CANISTER SUPPORT For versione 2 turrets
46	VIT0007020	BLIND RIVET

www.rheavendors.com tel: 0039 02 966 551 fax: 0039 02 96 55 086 email: rheavendors@rheavendors.com exclusive property of rheavendors group

upper lighting kit

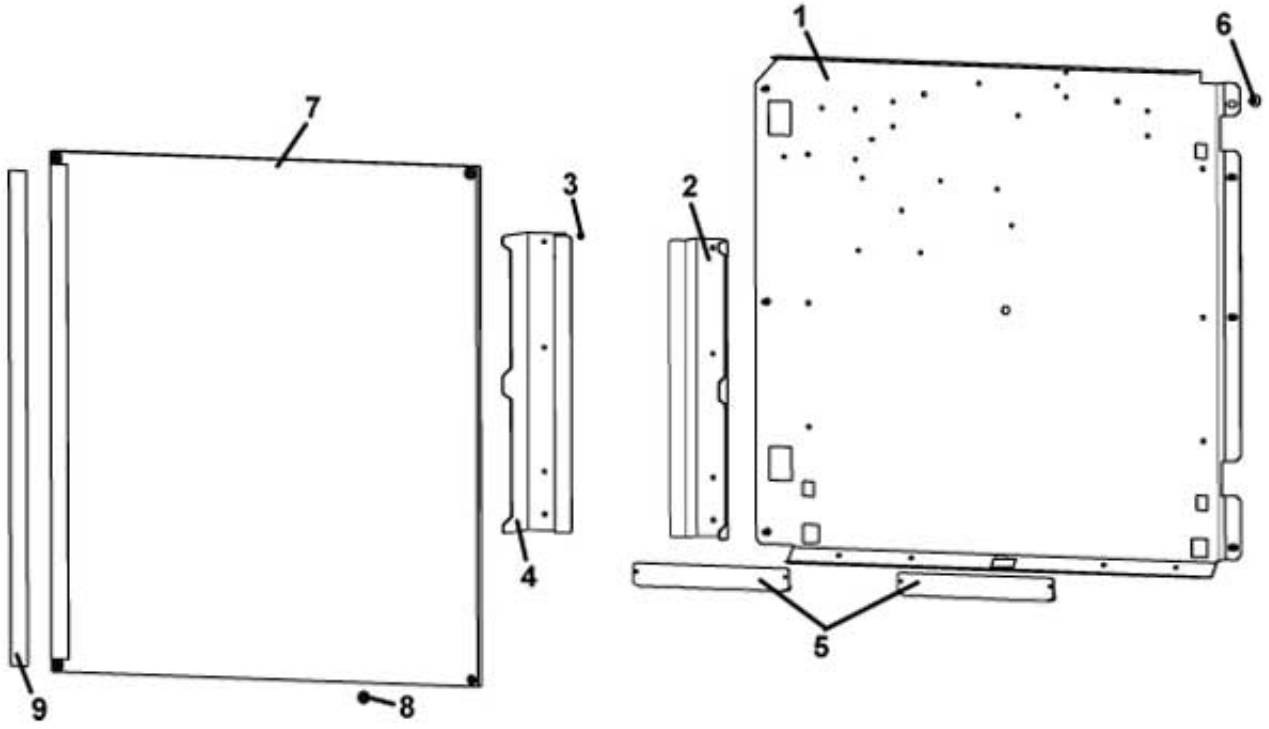

www.rheavendors.com tel: 0039 02 966 551 fax: 0039 02 96 55 086 email: rheavendors@rheavendors.com exclusive property of rheavendors group

upper lighting kit		
Pos.	**Code**	**Description**
1	Z0020042016	UPPER GRAPHIC PANEL PLATE
2	Z0020042254	LEFT GRAPHIC PANEL SUPPORT
3	VIT0007020	BLIND RIVET
4	Z0020042253	RIGHT GRAPHIC PANEL SUPPORT
5	Z0020042296	LIGHTING PANEL FIXING SUPPORT
6	VIT0002401	SCREW ST HEAD CAP M3.5X9.5
7	Z0020042272	PLEXIGLASS PANEL Pos.7+9
8	VIT0002012	SCREW ST HEAD CAP M2.9X16
9		included into pos. 7

www.rheavendors.com tel: 0039 02 966 551 fax: 0039 02 96 55 086 email: rheavendors@rheavendors.com exclusive property of rheavendors group

bottom lighting kit

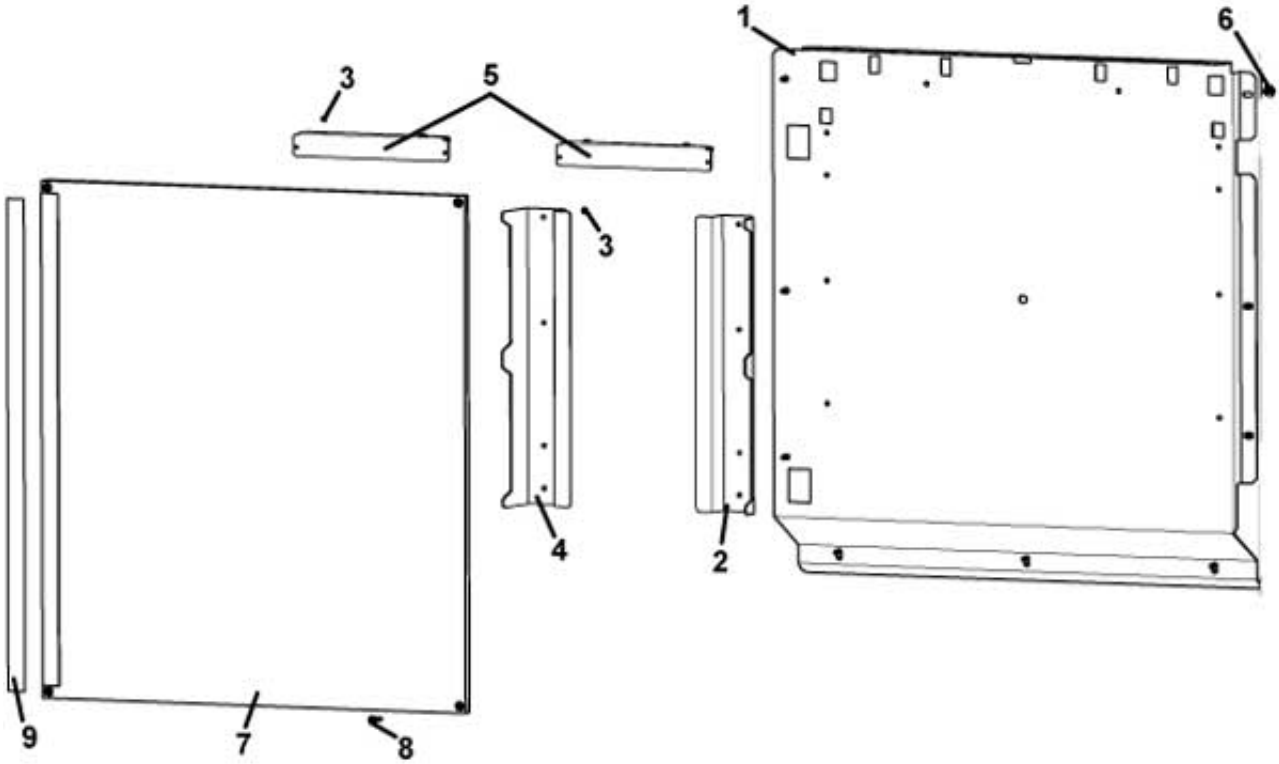

www.rheavendors.com tel: 0039 02 966 551 fax: 0039 02 96 55 086 email: rheavendors@rheavendors.com exclusive property of rheavendors group

bottom lighting kit		
Pos.	**Code**	**Description**
1	Z0020042148	LOWER GRAPHIC PANEL PLATE
2	Z0020042254	LEFT GRAPHIC PANEL SUPPORT
3	VIT0007020	BLIND RIVET
4	Z0020042253	RIGHT GRAPHIC PANEL SUPPORT
5	Z0020042296	LIGHTING PANEL FIXING SUPPORT
6	VIT0002401	SCREW ST HEAD CAP M3.5X9.5
7	Z0020042272	PLEXIGLASS PANEL Pos.7+9
8	VIT0002012	SCREW ST HEAD CAP M2.9X16
9		included into pos. 7

www.rheavendors.com tel: 0039 02 966 551 fax: 0039 02 96 55 086 email: rheavendors@rheavendors.com exclusive property of rheavendors group

display kit

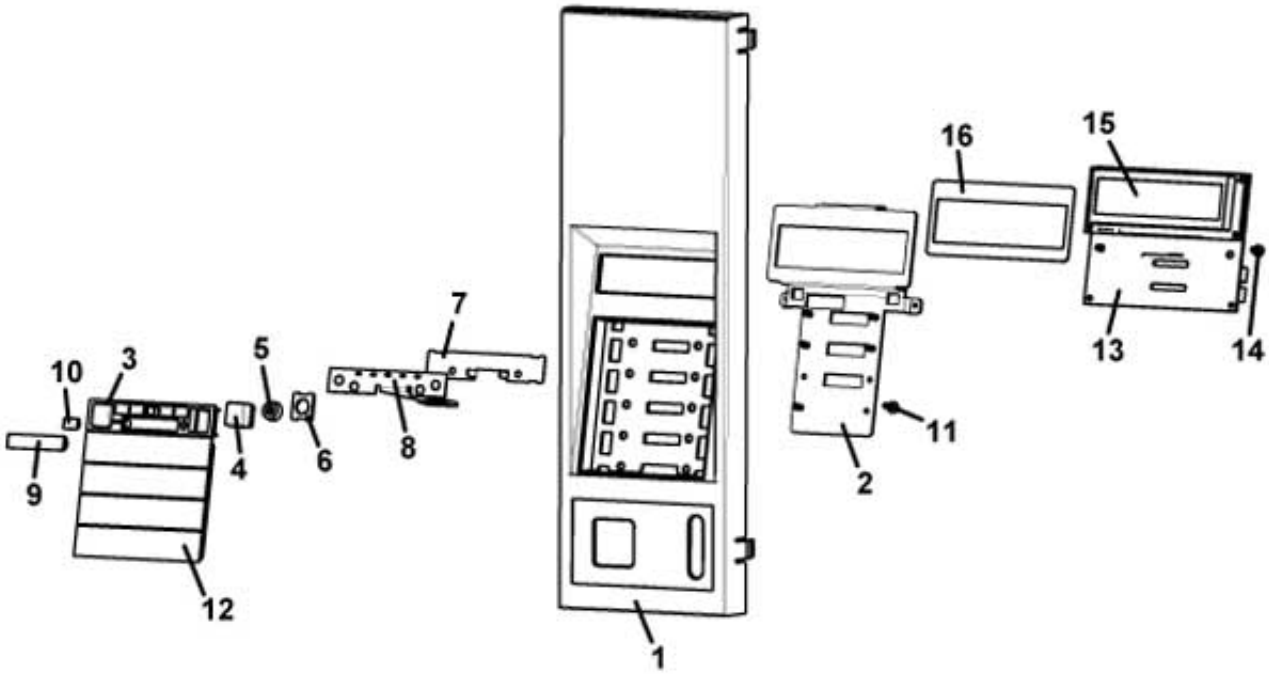

www.rheavendors.com tel: 0039 02 966 551 fax: 0039 02 96 55 086 email: rheavendors@rheavendors.com exclusive property of rheavendors group

display kit		
Pos.	**Code**	**Description**
1/a	Z0020042043DA	DISPLAY PANEL RAL9022
1/b	Z0020042043NA	DISPLAY PANEL BLACK
2	Z0020042087	SUGAR DISPLAY SUPPORT
3/a	Z0020042143DA	SUGAR MODULE RAL9022
3/b	Z0020042143NA	SUGAR MODULE BLACK
4/a	Z0020042081DA	SUGAR BUTTON RAL9022
4/b	Z0020042081CM	SUGAR BUTTON RAL9006
5	Z0020034311	SPRING
6	Z0020042153	SPACER
7	Z0020042155	KEYPAD SUPPORT
8	Z0020042154	KEYPAD 2 BUTTON
9	Z0020042146	PLEXIGLASS REGUL. SUGAR MODULE
10	Z0020042144	PLEXIGLASS LED
11	VIT0002011	SCREW ST HEAD CAP M2.9X9.5
12/a	Z0020042158DA	DISPLAY PANEL PLUG RAL9022
12/b	Z0020042158NA	DISPLAY PANEL PLUG BLACK
13	SCH0009421	DISPLAY RS232
14	VIT0002009	SCREW ST HEAD CAP M3.5X6.5
15	Z0020030271	PLEXIGLASS DISPLAY
16	Z0020042221	DISPLAY INSULATOR
100	Z0020042143DAR	SUGAR MODULE RAL9022
100	Z0020042143NAR	SUGAR MODULE (BLACK)

www.rheavendors.com tel: 0039 02 966 551 fax: 0039 02 96 55 086 email: rheavendors@rheavendors.com exclusive property of rheavendors group

TOUCH SCREEN KIT

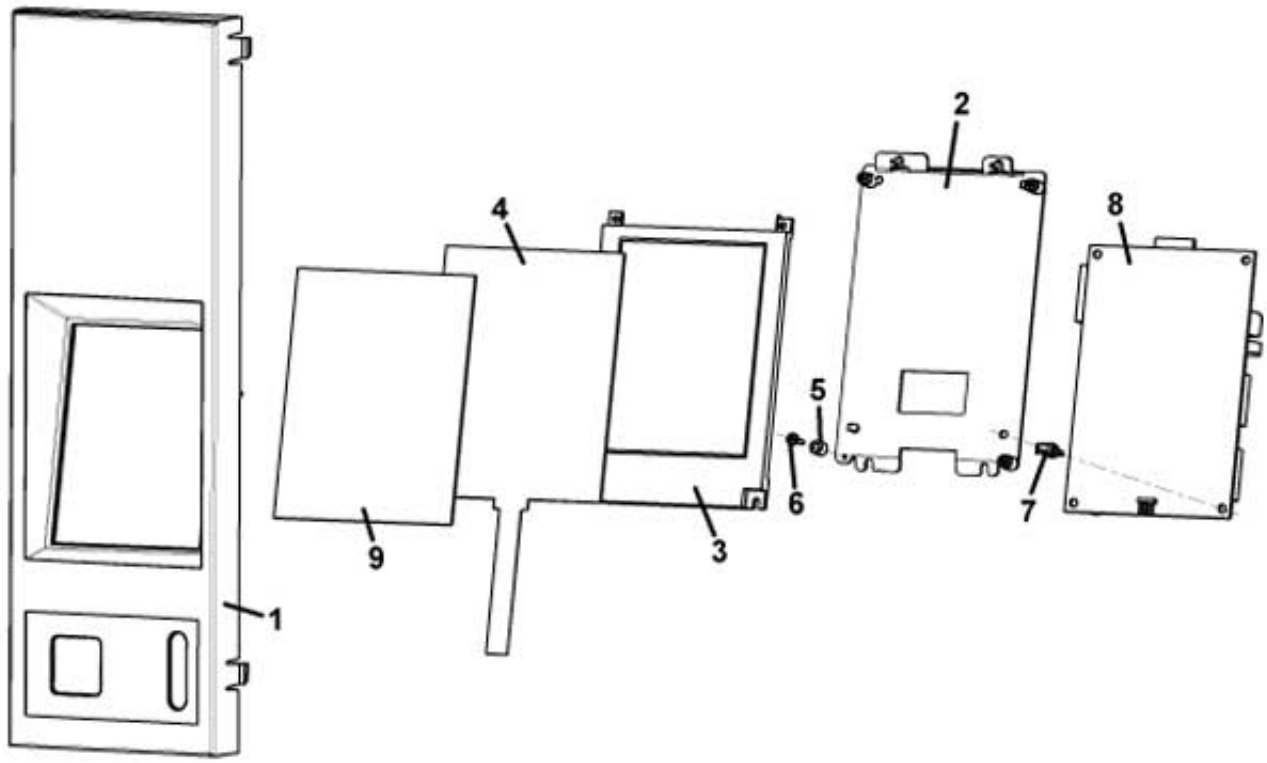

www.rheavendors.com tel: 0039 02 966 551 fax: 0039 02 96 55 086 email: rheavendors@rheavendors.com exclusive property of rheavendors group

TOUCH SCREEN KIT		
Pos.	**Code**	**Description**
1	Z0020042193CG	MONITOR MOUNTING FRAME R7035
1	Z0020042193CM	MONITOR MOUNTING FRAME RAL9006
1	Z0020042193DA	MONITOR MOUNTING FRAME RAL9022
1	Z0020042193NA	MONITOR MOUNTING FRAME BLACK
2	Z0020042258	TOUCH SCREEN SUPPORT
3	ELT0030429	LCD TFT 5.7"
4	ELT0030444	TOUCH PANEL 5,8"
5	Z0020042265	SPACER
6	VIT0000005	SCREW HEAD TAP CAP M3X12
7	ELE0062003	BOARD SUPPORT
8	SCH0007562	LCD 5,7" GPU BOARD
9	Z0020042275	DISPLAY COVER

www.rheavendors.com tel: 0039 02 966 551 fax: 0039 02 96 55 086 email: rheavendors@rheavendors.com exclusive property of rheavendors group

KEYBOARD

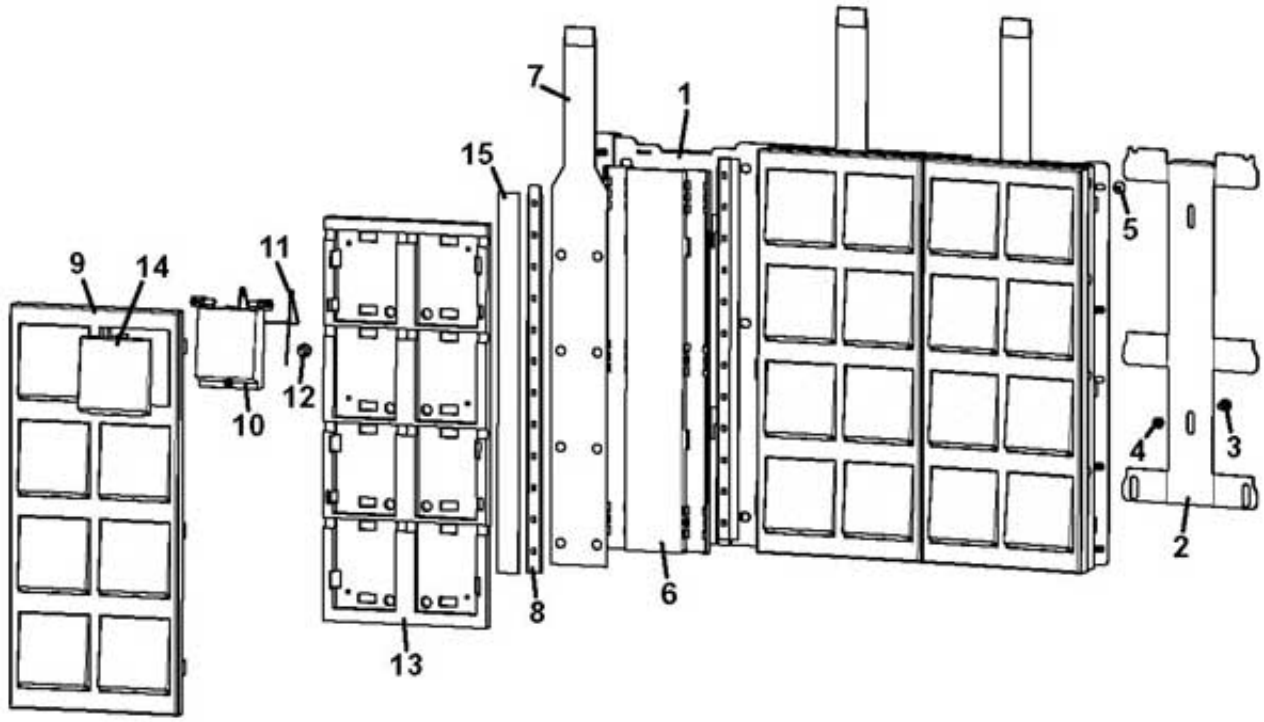

www.rheavendors.com tel: 0039 02 966 551 fax: 0039 02 96 55 086 email: rheavendors@rheavendors.com exclusive property of rheavendors group

KEYBOARD		
Pos.	**Code**	**Description**
1	Z0020042176R	§KEYPAD SUPPORT incl. Pos. 1 + 2 + 3 + 4
2	Z0020042123	FRAME REMOVE LEVER
3	4060010126	PAYM SYSTEM FIXING SCREW
4	VIT0004503	NUT M4
5	VIT0002401	SCREW ST HEAD CAP M3.5X9.5
6	Z0020042236	KEYPAD SUPPORT
7	Z0020042024	KEYPAD 8 BUTTON
8	Z0020042234	12 ADHESIVE LED STRIP
9/a	Z0020042025DA	BUTTON FRAME RAL9022
9/b	Z0020042025NA	BUTTON FRAME BLACK
10	Z0020042027TR	SELECTION BUTTON
11	Z0020042012	SELECTION BUTTON SPRING
12	Z0020042023	SELECTION BUTTON PLUG
13	Z0020042026	KEYPAD SUPPORT
14	Z0020042028	TRANSPARENT BUTTON LID
15/a	Z0020042238ID	ORANGE LED FILTER
15/b	Z0020042238PM	BLUE LED FILTER

www.rheavendors.com tel: 0039 02 966 551 fax: 0039 02 96 55 086 email: rheavendors@rheavendors.com exclusive property of rheavendors group

1 turret cups station

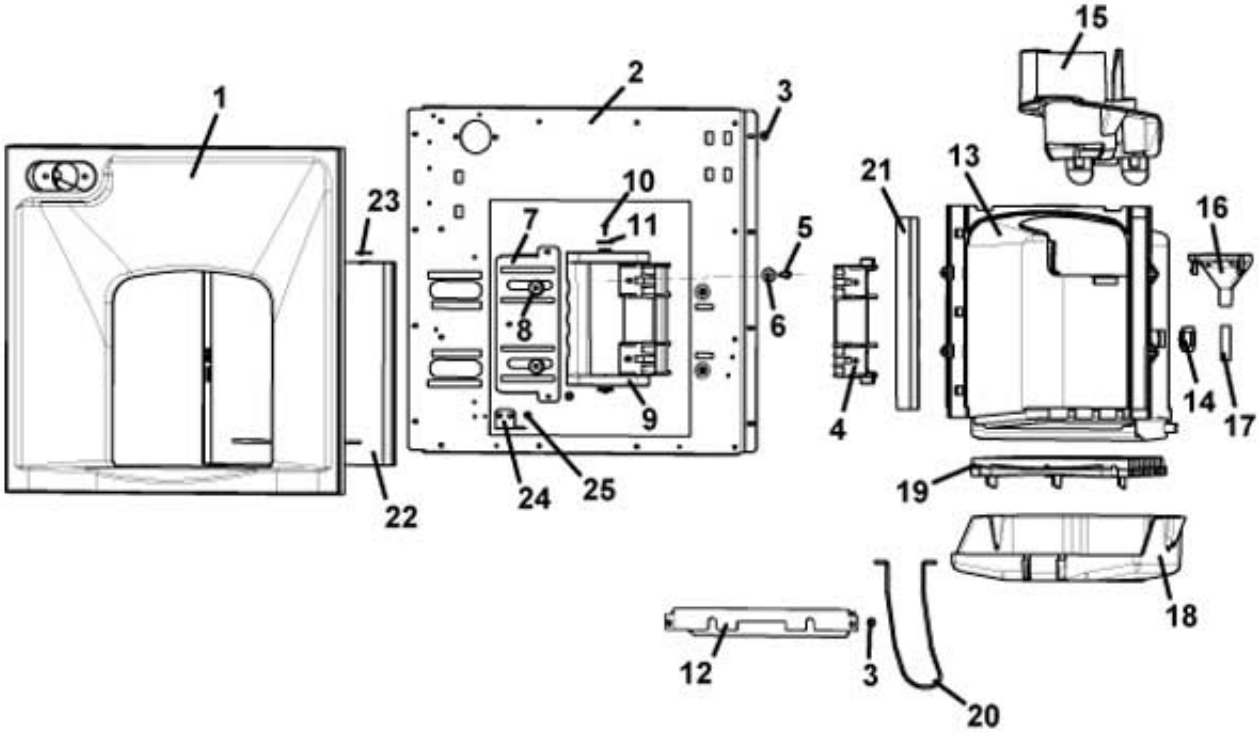

www.rheavendors.com tel: 0039 02 966 551 fax: 0039 02 96 55 086 email: rheavendors@rheavendors.com exclusive property of rheavendors group

1 turret cups station		
Pos.	**Code**	**Description**
1	Z0400009013DA	CUPS STATION FRAME RAL9022
1	Z0400009013NA	CUPS STATION FRAME BLACK
2	Z0400009014	CUPS STATION SUPPORT
3	VIT0002401	SCREW ST HEAD CAP M3.5X9.5
4	Z0400009007CY	CUP STATION PLATE
5	VIT0000210	5x18 T.E. SCREW
6	VIT0003302	WASHER 5,5X15X1,6
7	Z0400009121	HANDLE SUPPORT
8	Z0400009009	CUP STATION SPACER
9	Z0400009008IC	CUP STATION HANDLE RAL2011
10	VIT0002469	SCREW HEAD TAP M3.5X10
11	VIT0003303	WASHER 6,6X18X1,5
12	Z0400009012	DRIP TRAY
13	Z0400009001CW	CUPS STATION FRAME RAL7043
14	Z0400009018	SENSOR PLUG
15	Z0400009003CW	CUP CHUTE RAL 7043
16	Z0400009015CI	DROPS CHUTE RAL7042
16	Z0400009015CW	DROPS CHUTE RAL7043
17/a	TSIL07/11T-10	SILICON HOSE 7X11 MT.10
17/b	TSIL07/11T-50	SILICON HOSE 7X11 MT.50
18	Z0400009011CW	LIQUID CHUTE RAL7043
19	Z0400009019CW	CUP STATION GRID (RAL7043)
20	Z0150001105	DRIP TRAY SPRING
22	Z0400009006	FLAP
23	GUA0011017	MACHINE FOOT D.7,9
24	Z0400009025	SPACER PLATE
25	VIT0002009	SCREW ST HEAD CAP M3.5X6.5

www.rheavendors.com tel: 0039 02 966 551 fax: 0039 02 96 55 086 email: rheavendors@rheavendors.com exclusive property of rheavendors group

2 turrets cups station

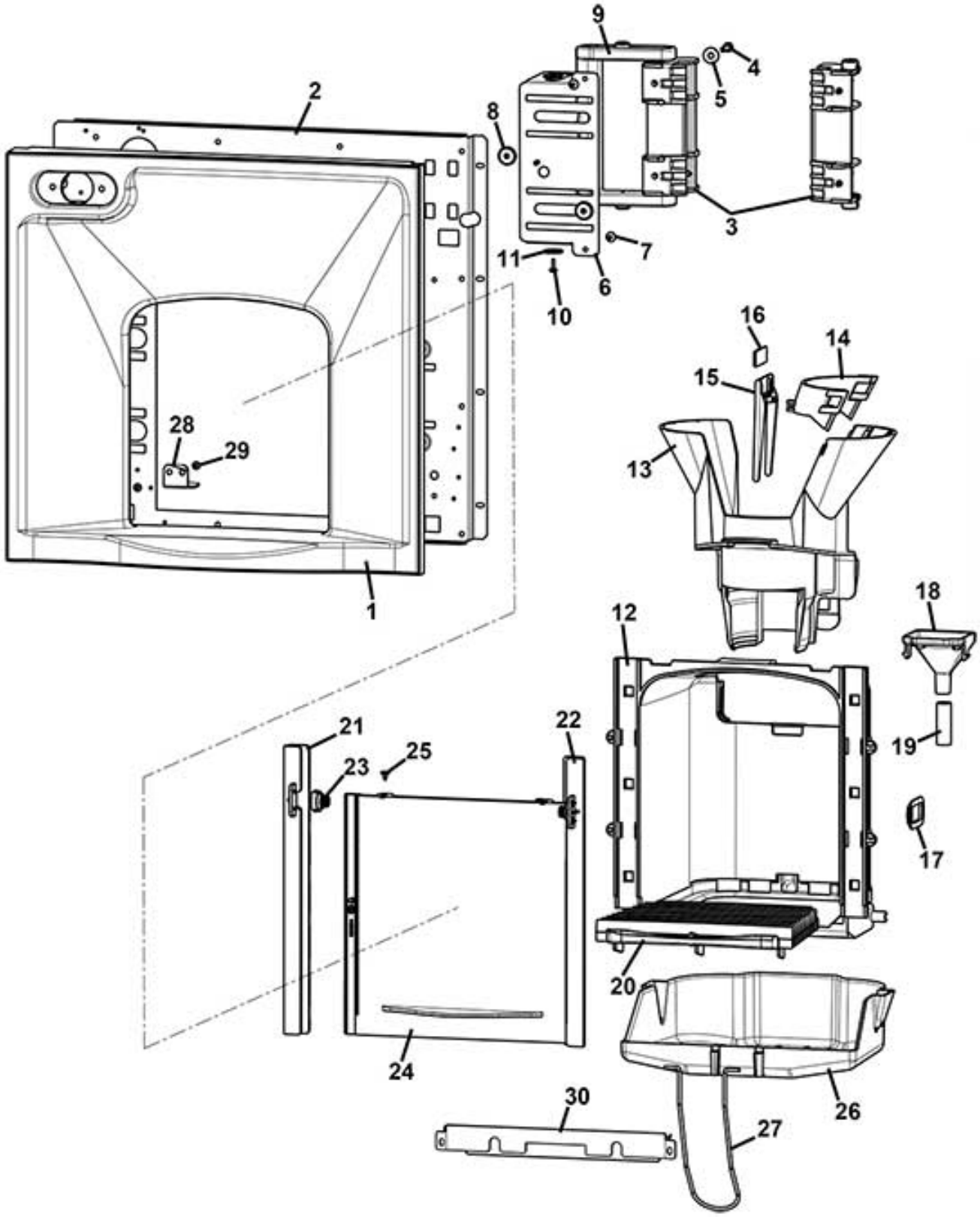

www.rheavendors.com tel: 0039 02 966 551 fax: 0039 02 96 55 086 email: rheavendors@rheavendors.com exclusive property of rheavendors group

2 turrets cups station		
Pos.	**Code**	**Description**
1	Z0400009013NA	CUPS STATION FRAME BLACK
2	Z0400009014	CUPS STATION SUPPORT
3	Z0400009007CY	CUP STATION PLATE
4	VIT0001110	SCREW HEX HEAD M5X20
5	VIT0003302	WASHER 5,5X15X1,6
6	Z0400009121	HANDLE SUPPORT
7	VIT0002401	SCREW ST HEAD CAP M3.5X9.5
8	Z0400009009	CUP STATION SPACER
9	Z0400009008IC	CUP STATION HANDLE RAL2011
10	VIT0002469	SCREW HEAD TAP M3.5X10
11	VIT0003305	WASHER 5,5X20X2
12	Z0400009001CW	CUPS STATION FRAME RAL7043
13	Z0400009002CW	DOUBLE CUP CHUTE RAL7043
14	Z0400009026CW	DOUBLE CHUTE ADAPTER RAL7043
15	Z0400009027CW	CUP STOPPER RAL7043
16	Z0020042219	CUP STOPPER WEIGHT
17	Z0400009018	SENSOR PLUG
18	Z0400009015CW	DROPS CHUTE RAL7043
19	TSIL10/14T	SILICON HOSE 10X14
20	Z0400009019CW	CUP STATION GRID (RAL7043)
21	Z0400009851CWR	§ DOOR GUIDE LH+RH RAL 7043 Pos.21+22
22	Z0400009851CWR	§ DOOR GUIDE LH+RH RAL 7043 Pos.21+22
23	Z0400009096	FLAP RETARDER
24	Z0400009006	FLAP
25	GUA0011017	MACHINE FOOT D.7,9
26	Z0400009011CW	LIQUID CHUTE RAL7043
27	Z0150001105	DRIP TRAY SPRING
28	Z0400009025	SPACER PLATE
29	VIT0002009	SCREW ST HEAD CAP M3.5X6.5
30	Z0400009012	DRIP TRAY

www.rheavendors.com tel: 0039 02 966 551 fax: 0039 02 96 55 086 email: rheavendors@rheavendors.com exclusive property of rheavendors group

1 TURRET DB SUPPORT

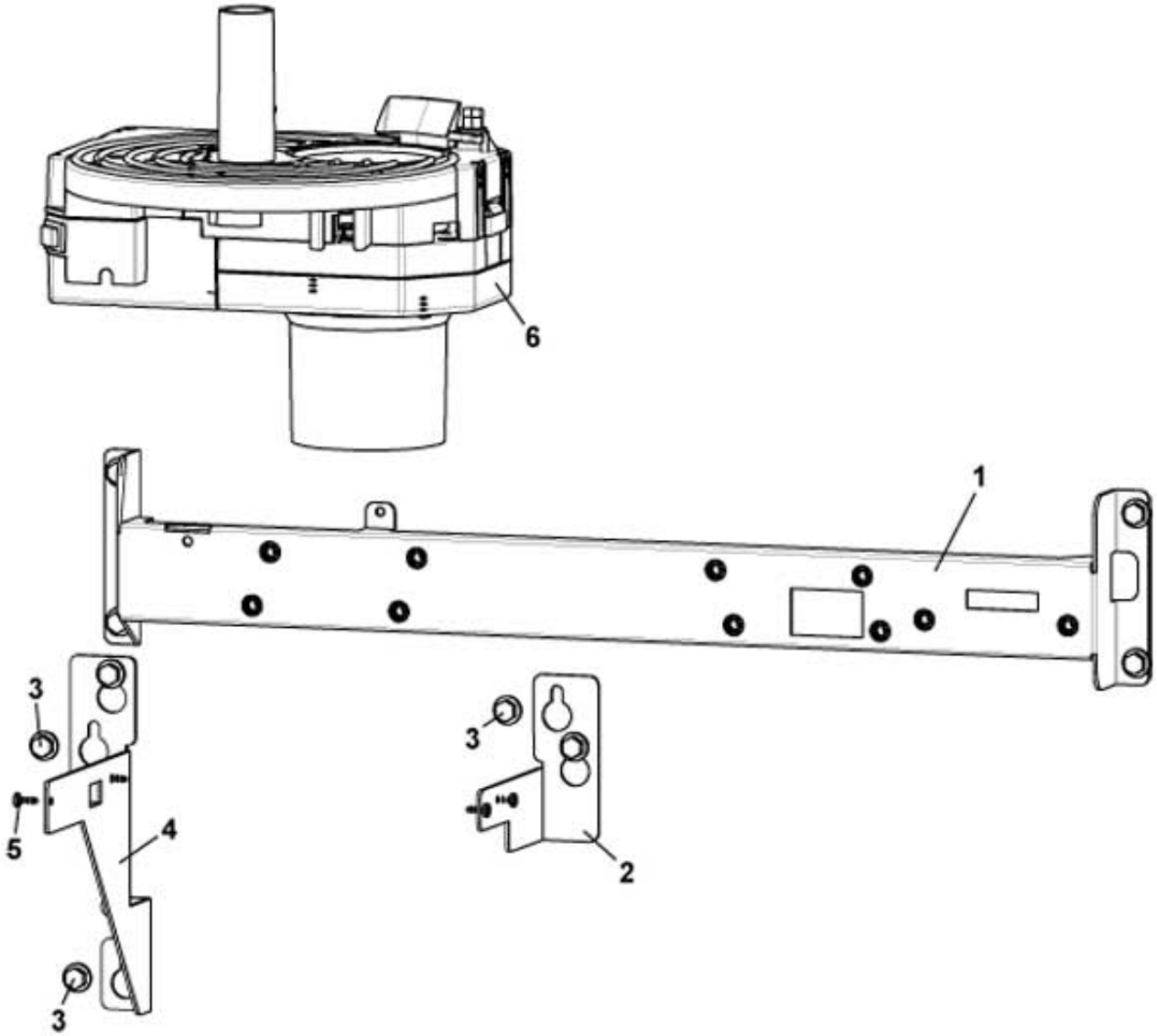

www.rheavendors.com tel: 0039 02 966 551 fax: 0039 02 96 55 086 email: rheavendors@rheavendors.com exclusive property of rheavendors group

1 TURRET DB SUPPORT		
Pos.	**Code**	**Description**
1	Z0020042069CK	TURRE SUPPORT PLATE RAL7037
2	Z0020042116	TURRET RIGHT SUPPORT-5COLUMNS
3	VIT0000236	SCREW HEX HEAD M6X11
4	Z0020042114	TURRET LEFT SUPPORT-5COLUMNS
5	VIT0002469	SCREW HEAD TAP M3.5X10
6		See table cups loader

www.rheavendors.com tel: 0039 02 966 551 fax: 0039 02 96 55 086 email: rheavendors@rheavendors.com exclusive property of rheavendors group

2 TURRETS DB SUPPORT

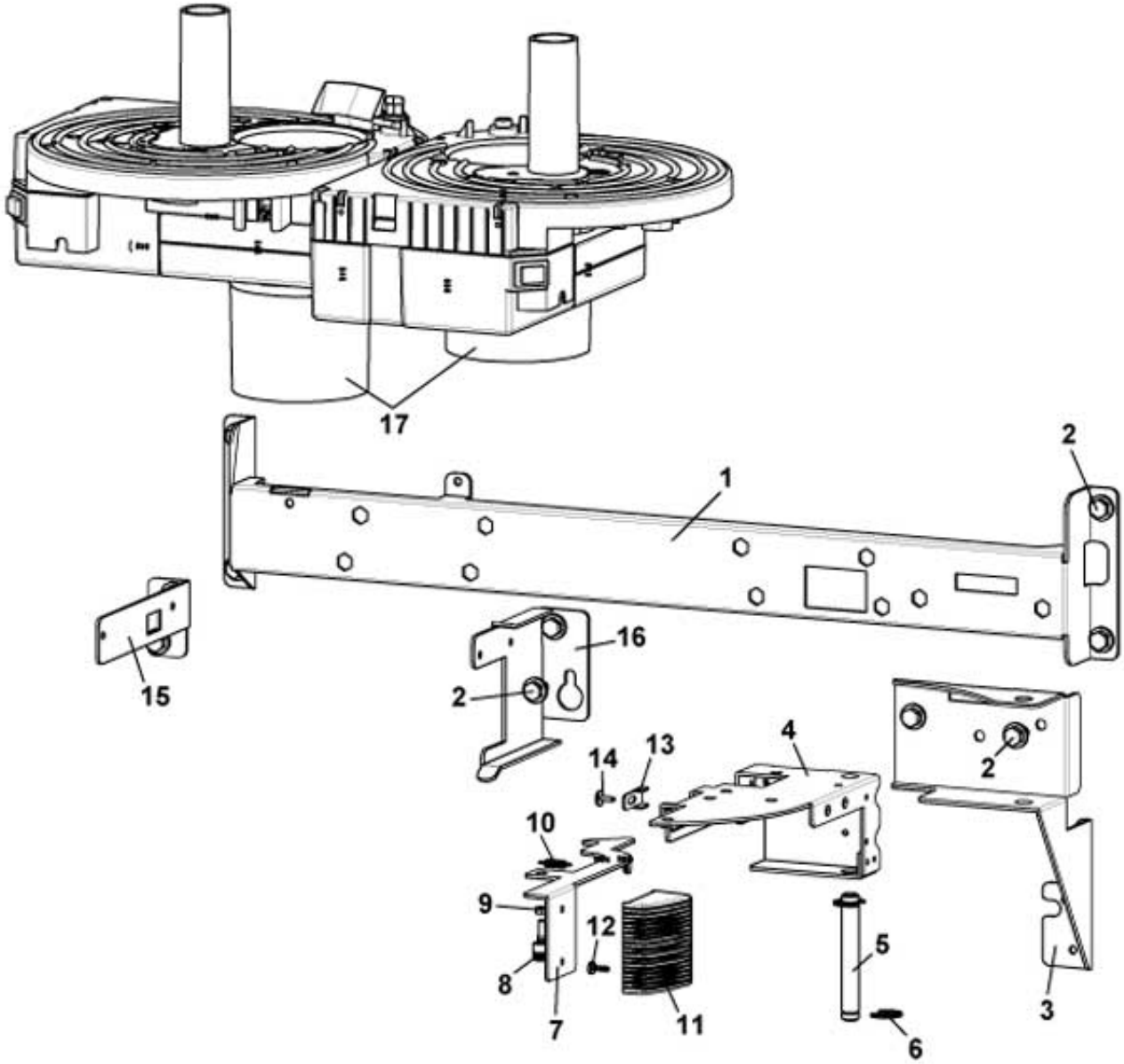

www.rheavendors.com tel: 0039 02 966 551 fax: 0039 02 96 55 086 email: rheavendors@rheavendors.com exclusive property of rheavendors group

2 TURRETS DB SUPPORT		
Pos.	**Code**	**Description**
1	Z0020042069CK	TURRE SUPPORT PLATE RAL7037
2	VIT0000236	SCREW HEX HEAD M6X11
3	Z0020042074	TURRET SUPPORT
4	Z0020042071	TURRET SUPPORT
5	Z0020042078	HINGE PIN
6	VIT0006518	RING 9
7	Z0020042077	TURRET HOOK
8	Z0020031343	PIN
9	VIT0004503	NUT M4
10	Z0450003010	SPRING
11	Z0020042168IC	HANDLE RAL2011
12	VIT0002469	SCREW HEAD TAP M3.5X10
13	Z0020042076	REGULATION LEVER
14	VIT0002401	SCREW ST HEAD CAP M3.5X9.5
15	Z0020042066	TURRET LEFT SUPPORT
16	Z0020042067	TURRET RIGHT SUPPORT
17		See table cups loader

www.rheavendors.com tel: 0039 02 966 551 fax: 0039 02 96 55 086 email: rheavendors@rheavendors.com exclusive property of rheavendors group

cups loader

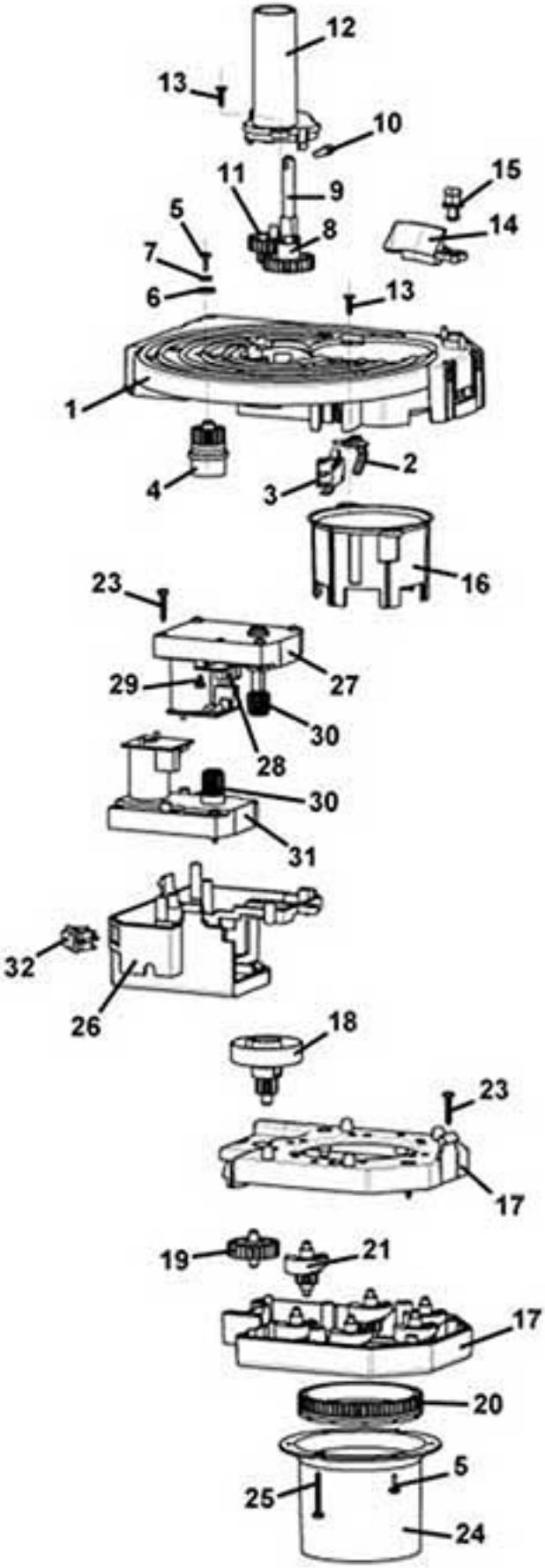

www.rheavendors.com tel: 0039 02 966 551 fax: 0039 02 96 55 086 email: rheavendors@rheavendors.com exclusive property of rheavendors group

cups loader		
Pos.	**Code**	**Description**
1	Z0190006534CY-03	TURRET SUPPORT RAL9018
2/a	Z0190006543-01	MICROSWITCH LEVER WHITE
2/b	Z0190006556KA	MICROSWITCH LEVER RAL3020
3	ELE0001530	MICROSWITCH 3A 125-250VA
4	Z0190006546	CUP DISPENSER MOTOR CONNECTOR
5	VIT0002469	SCREW HEAD TAP M3.5X10
6	VIT0003301	WASHER 4,3X12X1,5
7	VIT0003103	SPRING WASHER 4,3
8	Z0190006503	Z26 WHEEL TURRET (WHITE)
9	Z0190006536	TURRET SHAFT
10	Z0190006553	PIN
11	Z0190006544	Z16 PINION WHITE
12/a	Z0190006547CF	TURRET CUP CONNEC. 5C. RAL7016
12/b	Z0190006537CY	TURRET CUP CONNEC. 4C. RAL9018
13	VIT0002101	SCREW COUNT FLAT HEAD M3.5X13
14	Z0190006554CYR	§ TURRET STOPPER LEVER+PIN pos.14+15
16/a	Z0190006538CF	CUPS REDUCER D.70 RAL7016
16/b	Z0190006539CY	CUPS REDUCER D.73 RAL9018
17	Z0190006521CYR	LOWER/UPPER CUP DROP MECH.
18	Z0190006511NA	CUPS TURRET SPINDLE BLACK
19	Z0190006528	Z26 WHEEL WHITE
20/a	Z0190006523	TOOTHED RING NUT D.70/73
20/b	Z0190006507	TOOTHED RING NUT D.78/80 WHITE
21/a	Z0190006506IC	SPLIT UP D.70/78-ORANGE PL
21/b	Z0190006551GJ	SPLIT UP D.70/78-YELLOW PP
21/c	Z0190006552CI	SPLIT UP D.73-GREY PL
21/d	Z0190006502	CUP SPLITTER D.73/80 PP WHITE
23	VIT0002456	SCREW HEAD TAP M3.5X25
24/a	Z0190006514CY	CUPS CHUTE 70/73 RAL9018
24/b	Z0190006515CY	CUPS CHUTE 78/80 RAL9018
25	VIT0002468	SCREW HEAD TAP M3.5X30
26	Z0190006522CY	MOTOR SUPPORT RAL9018
27	Z0090002114R2	§ GEARBOX MOTOR 11RPM 24V DC Cups drop
28	SCH0007000	SPLIT UP SENSOR
29	VIT0002002	SCREW ST HEAD CAP M3.5X6.5
30	Z0190006518	TOOTHED SHAFT Z18 WHITE
31	Z0090002123R	§ GEARBOX MOTOR 5,5RPM 24V DC Column rotation
32	ELE0002258CL	§ PUSH BUTTON RED
100/a	Z0190006501CL	§ CUPS DISPENSER 5C. D.70 PL
100/b	Z0190006501CL0	§ CUPS DISPENSER 5C. D.70 PP
100/c	Z0190006501CL1	§ CUPS DISPENSER 5C. D.73 PL
100/d	Z0190006501CL2	§ CUPS DISPENSER 5C. D.73 PP
100/e	Z0190006501CL3	§ CUPS DISPENSER 5C. D.78 PL
100/f	Z0190006500CL	§ CUPS DISPENSER 4C. D.70 PL
100/g	Z0190006500CL0	§ CUPS DISPENSER 4C. D70 PP
100/h	Z0190006500CL1	§ CUPS DISPENSER 4C. D.73 PL
100/i	Z0190006500CL2	§ CUPS DISPENSER 4C. D.73 PP

www.rheavendors.com tel: 0039 02 966 551 fax: 0039 02 96 55 086 email: rheavendors@rheavendors.com exclusive property of rheavendors group

cups loader		
100/l	Z0190006500CL3	§ CUPS DISPENSER 4C. D.78 PL
100/m	Z0190006500CL5	§ CUPS DISPENSER 4C. D.80 PP
101/a	Z0190006534CL0R	§ TURRET SUPPORT-5COLUMNS (From pos. 1 to pos. 15-pos.12/a and 2/a)
101/b	Z0190006534CLR	§ TURRET SUPPORT-4COLUMNS (From pos. 1 to pos. 15-pos.12/b and 2/a)
101/c	Z0190006534CL1R	§ TURRET SUPPORT-4COLUMNS (From pos. 1 to pos. 15-pos.12/b and 2/b)
102/a	Z0190006521CLR	§ CUP DROP MECH. D.70 PL (From pos. 17 to pos. 24-pos.20/a+21/a+24/a)
102/b	Z0190006521CL0R	§ CUP DROP MECH. D.70 PP (From pos. 17 to pos. 24-pos.20/a+21/b+24/a)
102/c	Z0190006521CL1R	§ CUP DROP MECH. D.73 PL (From pos. 17 to pos. 24-pos.20/a+21/c+24/a)
102/d	Z0190006521CL2R	§ CUP DROP MECH. D.73 PP (From pos. 17 to pos. 24-pos.20/a+21/d+24/b)
102/e	Z0190006521CL3R	§ CUP DROP MECH. D.78 PL (From pos. 17 to pos. 24-pos.20/b+21/a+24/b)
102/f	Z0190006521CL5R	§ CUP DROP MECH. D.80-PP (From pos. 17 to pos. 24-pos.20/b+21/d+24/b)
103	Z0190006522CLR	§ CUPS DISPENSER MOTOR SUPPORT (From pos. 26 to pos. 32)

www.rheavendors.com tel: 0039 02 966 551 fax: 0039 02 96 55 086 email: rheavendors@rheavendors.com exclusive property of rheavendors group

5 columns cups turret

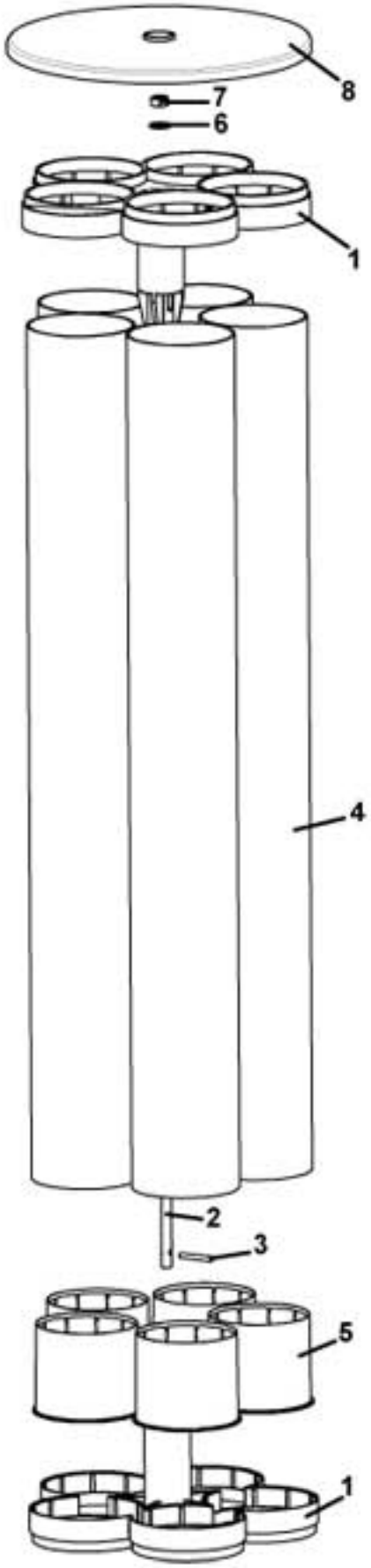

www.rheavendors.com tel: 0039 02 966 551 fax: 0039 02 96 55 086 email: rheavendors@rheavendors.com exclusive property of rheavendors group

5 columns cups turret		
Pos.	**Code**	**Description**
1	Z0180013111-02CY	CUP TURRET SPINDLE 5C RAL9018
2	Z0180013114	1 TURRET SHAFT
3	VIT0005210	DOWEL PIN 4X28
4	Z0180013109	CUP HOLDER 1T D.84/81MM L680MM
5	Z0180013113	D.70 COLUMN REDUCTION (WHITE)
6	VIT0003006	WASHER 8,4X17X1,6
7	VIT0004506	NUT M8
8	Z0180013112CY	CUPS TURRET LID 5C. RAL9018
100	Z0180013101CL	§ CUPS TURRET 5COLUMNS D.70/73 (From pos.1 to pos. 8)
101	Z0180013101CL0	5C TURRET ASSEMBLY D.78 (From pos.1 to pos. 8-excluded pos.5)

www.rheavendors.com tel: 0039 02 966 551 fax: 0039 02 96 55 086 email: rheavendors@rheavendors.com exclusive property of rheavendors group

4 columns cups turret

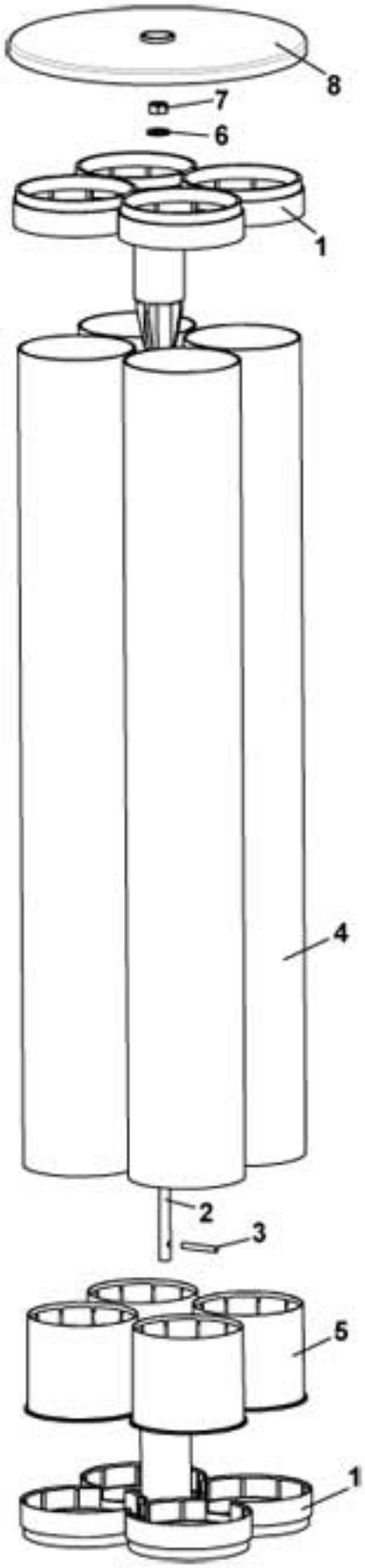

www.rheavendors.com tel: 0039 02 966 551 fax: 0039 02 96 55 086 email: rheavendors@rheavendors.com exclusive property of rheavendors group

4 columns cups turret		
Pos.	**Code**	**Description**
1/a	Z0180013105-02CY	CUP TURRET SPINDLE 4C RAL9018
1/c	Z0180013122CY-04	CUP TURRET SPINDLE 4C RAL9018
2	Z0180013108	2 TURRET SHAFT
3	VIT0005210	DOWEL PIN 4X28
4/a	Z0180013106	CUP HOLDER 2T D.84/81MM L600MM
4/b	Z0180013117	CUP HOLDER 2T D.87/84MM L600MM
5	Z0180013113	D.70 COLUMN REDUCTION (WHITE)
6	VIT0003006	WASHER 8,4X17X1,6
7	VIT0004506	NUT M8
8	Z0180013107CY	CUPS TURRET LID 4C. RAL9018
100	Z0180013100R	§ CUPS TURRET 4COLUMNS D.70/73 (From pos.1 to pos. 8-pos.1/a+4/a)
101	Z0180013100R3	§ CUPS TURRET 4COLUMNS D.80 (From pos.1 to pos. 8-pos.1/a+4/a-excluded pos.5)
102	Z0180013100R3	§ CUPS TURRET 4COLUMNS D.80 (From pos.1 to pos. 8-pos.1/b+1/c+4/b-excluded pos.5)

www.rheavendors.com tel: 0039 02 966 551 fax: 0039 02 96 55 086 email: rheavendors@rheavendors.com exclusive property of rheavendors group

stirrer dispenser

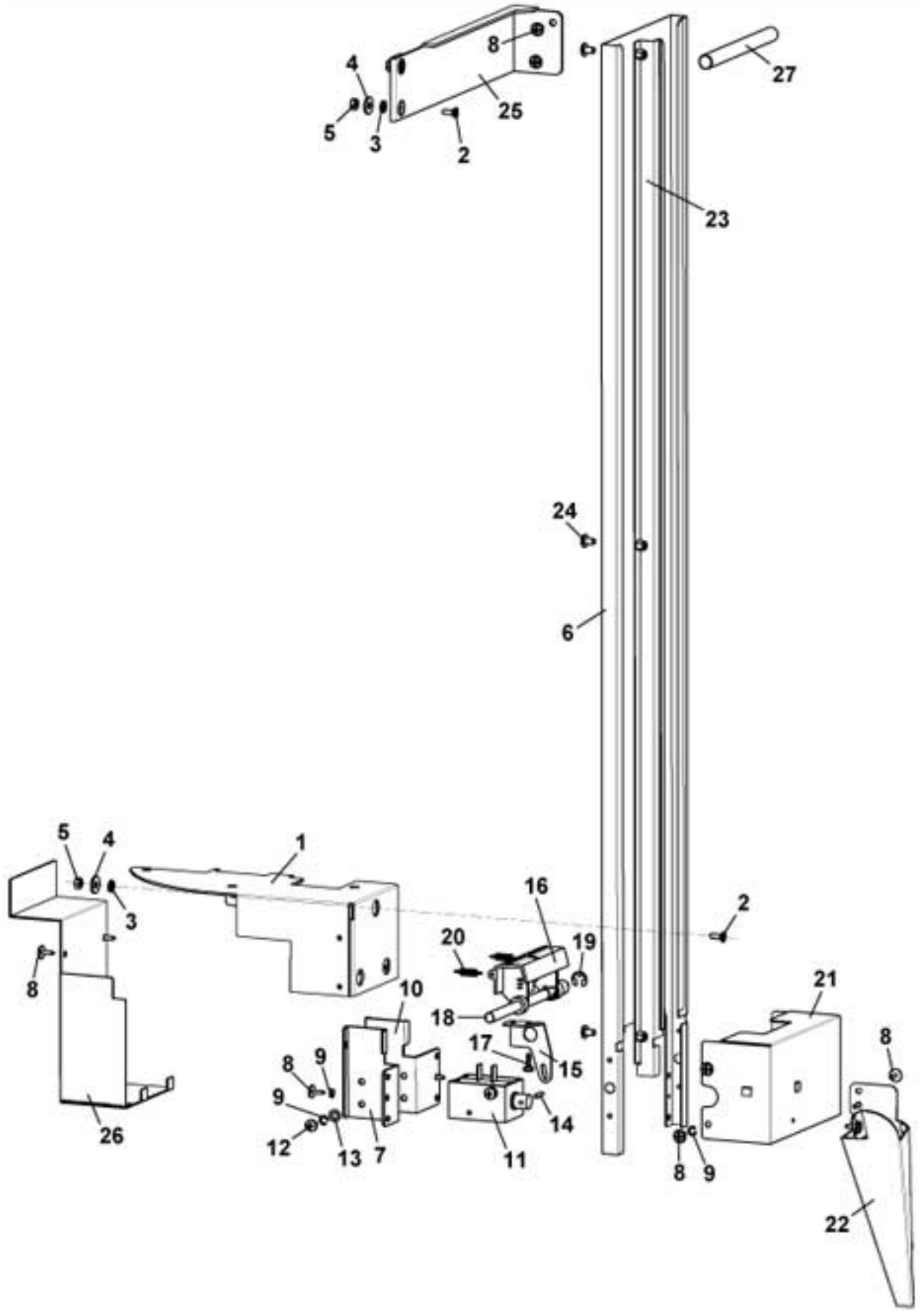

www.rheavendors.com tel: 0039 02 966 551 fax: 0039 02 96 55 086 email: rheavendors@rheavendors.com exclusive property of rheavendors group

stirrer dispenser		
Pos.	**Code**	**Description**
1	Z002A003072	STIRRERS SUPPORT
2	VIT0000107	SCREW COUNT FLAT HEAD M4X10
3	VIT0003103	SPRING WASHER 4,3
4	VIT0003302	WASHER 5,5X15X1,6
5	VIT0004815	NUT M4
6	Z0450011006	STIRRERS CONTAINER 89-104-115
7	Z0450009139	ELECTROMAGNET RIGHT SUPPORT
8	VIT0002401	SCREW ST HEAD CAP M3.5X9.5
9	VIT0003405	SPRING WASHER 4,3
10	Z0450009140	ELECTROMAGNET LEFT SUPPORT
11	ELE0000055	ELECTROMAGNET 5% 24V DC
12	VIT0000021	SCREW HEAD TAP CAP M4X6
13	VIT0003003	WASHER 4,3X8X0,8
14	VIT0005211	DOWEL PIN 2.5X12
15	Z0450009141	ELECTROMAGNET CONNECTING ROD
16	Z0450002003	STIRRER EJECTOR
17	VIT0002469	SCREW HEAD TAP M3.5X10
18	Z0450011066	STIRRER EJECTOR PIN
19	VIT0006504	RING 5
20	Z0450003010	SPRING
21	Z0450011045	STIRRER FUNNEL 89-104-115 2T
22	Z0450011017	STIRRER CHUTE 2T
23	Z0450011019	STIRRERS CONTAINER GUIDE
24	VIT0000030	SCREW HEAD TAP CAP M4X7
25	Z0020042167	STIRRERS REINFORCEMENT
26	Z0020042169	ELECTROMAGNET COVER
27/a	4001012030	STIRRER WEIGHT 89MM
27/b	Z0450003033	STIRRER WEIGHT 104MM
27/c	Z0450011121	STIRRER WEIGHT 115MM

www.rheavendors.com tel: 0039 02 966 551 fax: 0039 02 96 55 086 email: rheavendors@rheavendors.com exclusive property of rheavendors group

solubles dispenser H/5

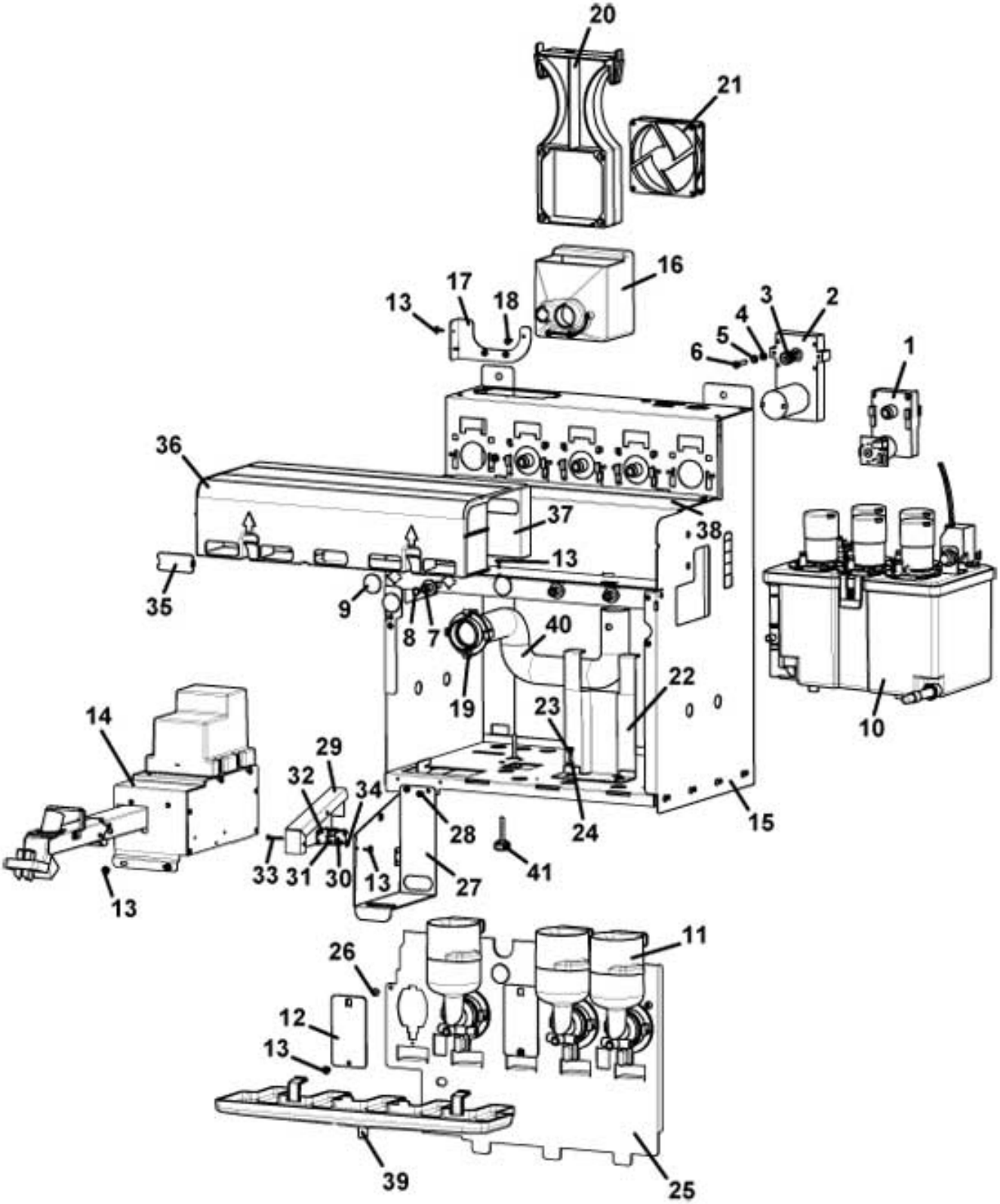

www.rheavendors.com tel: 0039 02 966 551 fax: 0039 02 96 55 086 email: rheavendors@rheavendors.com exclusive property of rheavendors group

solubles dispenser H/5		
Pos.	**Code**	**Description**
1	Z0090002113R	§ GEARBOX MOTOR 24V DC+FILTER
2/a	Z0090002082	MOTOR 24 DC 55 RPM
2/b	Z0090002081	MOTOR 24 DC 85 RPM
3	Z0230012010	PINION
4	Z0090002079	SPACER
5	VIT0003104	SPRING WASHER 5,3
6	VIT0000015	SCREW HEAD TAP CAP M4X25
7/a	Z0080100043	MIXER CONNECTOR BLACK
7/b	Z0080100043-02PL	MIXER CONNECTOR-SHORT BLUE
7/c	Z0080100043-02MD	MIXER CONNECTOR-SHORT GREEN
7/d	Z0080100043-02IC	MIXER CONNECTOR-SHORT ORANGE
8	GUA0000089	OR 2031 RED SILICONE A70
9	Z0080100035NA	CONNECTOR PLUG BLACK
10		See table boiler
11		See table mixer
12	Z0010020028NA	MIXER PLUG BLACK
13	VIT0002401	SCREW ST HEAD CAP M3.5X9.5
14		See table distribution pipes movement
15	Z0070020001-09	HOUSING H5
16	Z0070020017CY	EXTRACTOR FUNNEL RAL9018
17	Z0070020030	FAN PLATE
18	VIT0002469	SCREW HEAD TAP M3.5X10
19	Z0070020019CY	EXTRATOR TUBE SUPPORT
20	Z0070020024IC	FAN SUPPORT RAL2011
21/a	ELE0000464R	§ FAN 24V DC D. 92 Up to serial 20133799999
21/b	ELE0000468R	§ FAN 24V DC-HIGH SPEED-D.92 from serial 20133800000
22	Z0070021013	BOILER BRACKET
23	VIT0001005	SCREW HEAD TAP CAP M4X12
24	VIT0003109	SPRING WASHER 4,3
25	Z0070020011	MIXER SUPPORT
26	VIT0000012	SCREW HEAD TAP CAP M4X10
27	Z0070020231	PIPE SUPPORT GUIDE
28	VIT0002009	SCREW ST HEAD CAP M3.5X6.5
29	Z0070020037	SWITCH COVER
30	ELE0001528	MICROSWITCH
31	NL201106265	MICRO LEVER
32	4600010014	SPACER
33	VIT0000006	SCREW HEAD TAP CAP M3X16
34	VIT0004701	NUT M3
35	Z0070014776	TRAP PLUG
36	Z0070020012CY	EXTRACTOR DRAWER RAL9018
37	Z0070020013CY	EXTRACTOR COVER RAL9018
38	Z0070020004	TRAP SUPPORT (BLACK)
39	Z0070020035CY	POWDER TRAY RAL9018
40	TEOL000002	EXTRACTOR TUBE D.30
41	VIT0009164	HANDLE
100	Z0070020024R1	FAN SUPPORT ASS.Y Pos.20+21/b+0010030121+VIT0002009 Up to serial 2013379999

www.rheavendors.com tel: 0039 02 966 551 fax: 0039 02 96 55 086 email: rheavendors@rheavendors.com exclusive property of rheavendors group

solubles dispenser H/5 ET

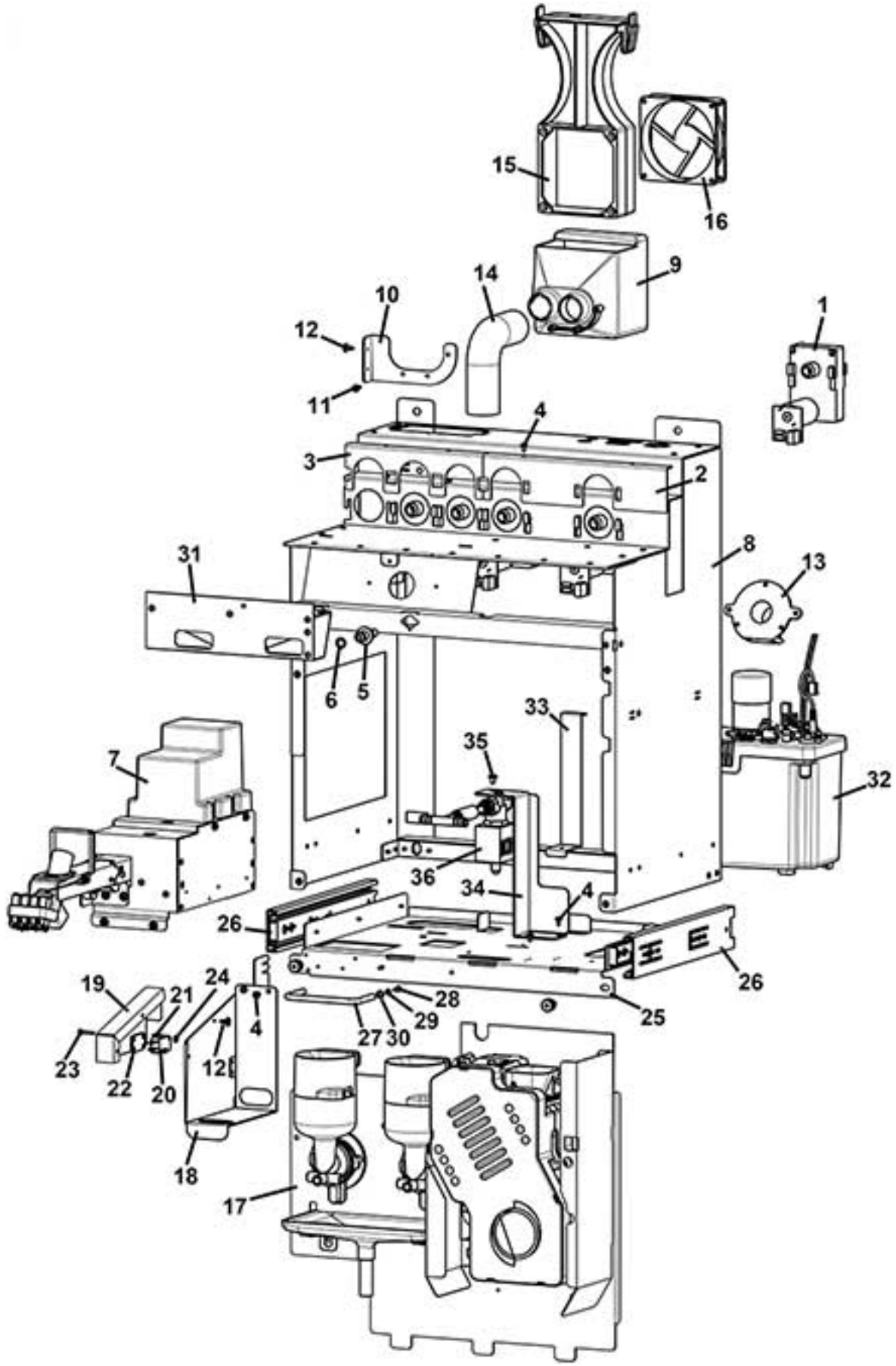

www.rheavendors.com tel: 0039 02 966 551 fax: 0039 02 96 55 086 email: rheavendors@rheavendors.com exclusive property of rheavendors group

solubles dispenser H/5 ET		
Pos.	**Code**	**Description**
1	Z0090002113R	§ GEARBOX MOTOR 24V DC+FILTER
2	Z0070020220	2 PRD. MOTORS SUPPORT
3	Z0070021014	3 PRD.MOTORS SUPPORT
4	VIT0002009	SCREW ST HEAD CAP M3.5X6.5
5/a	Z0080100043GJ	MIXER CONNECTOR-SHORT YELLOW
5/b	Z0080100043-02IC	MIXER CONNECTOR-SHORT ORANGE
5/c	Z0080100043-02KA	MIXER CONNECTOR-SHORT RED
5/d	Z0080100043-02MD	MIXER CONNECTOR-SHORT GREEN
5/e	Z0080100043-02PL	MIXER CONNECTOR-SHORT BLUE
6	GUA0000089	OR 2031 RED SILICONE A70
7		
8	Z0070020205	TEA GROUP HOUSING
9	Z0070020017CY	EXTRACTOR FUNNEL RAL9018
10	Z0070020030	FAN PLATE
11	VIT0002469	SCREW HEAD TAP M3.5X10
12	VIT0002401	SCREW ST HEAD CAP M3.5X9.5
13	Z0010014071	TRAP CONNECTOR
14	TEOL000002	EXTRACTOR TUBE D.30
15	Z0070020024IC	FAN SUPPORT RAL2011
16/a	ELE0000464R	§ FAN 24V DC D. 92 Up to serial 20133799999
16/b	ELE0000468R	§ FAN 24V DC-HIGH SPEED-D.92 from serial 20133800000
17		
18	Z0070020231	PIPE SUPPORT GUIDE
19	Z0070020037	SWITCH COVER
20	ELE0001528	MICROSWITCH
21	NL201106265	MICRO LEVER
22	4600010014	SPACER
23	VIT0000006	SCREW HEAD TAP CAP M3X16
24	VIT0004701	NUT M3
25	Z0070020212	MIXERS HOUSING BOTTOM
26	Z0070015144	TELESCOPICS GUIDE
27	Z0070015143	BOTTOM EXTRACTABLE HANDLE
28	VIT0000004	SCREW HEAD TAP CAP M3X10
29	VIT0003102	SPRING WASHER 3,2
30	VIT0003003	WASHER 4,3X8X0,8
31	Z0070020207	EXHAUST HOUSING
32		See table solubles dispenser H/5
33	Z0070020228	BOILER FIXING BRACKET
34	Z0070020227	3-WAYS VALVE SUPPORT
35	VIT0000030	SCREW HEAD TAP CAP M4X7
36	Z0110001112	VALVE 3W 1/8 24V DC
100	Z0070020024R1	FAN SUPPORT ASS.Y Pos.15+16/b+0010030121+VIT0002009 Up to serial 20133799999

www.rheavendors.com tel: 0039 02 966 551 fax: 0039 02 96 55 086 email: rheavendors@rheavendors.com exclusive property of rheavendors group

mixer

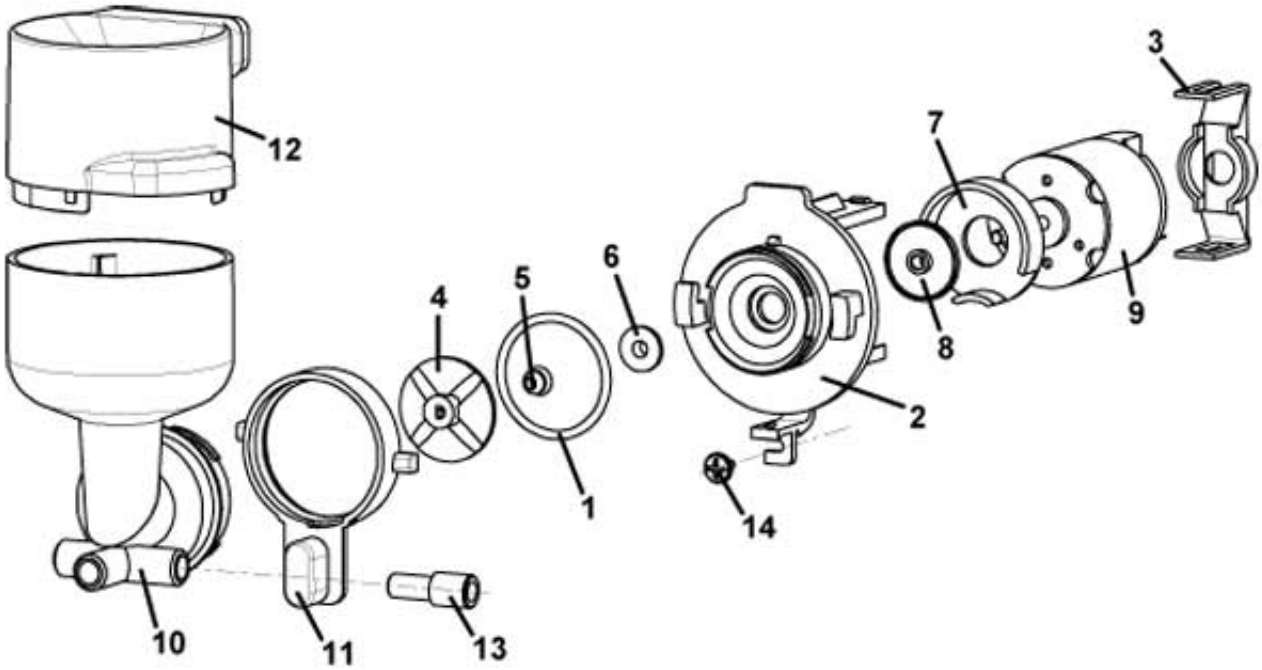

www.rheavendors.com tel: 0039 02 966 551 fax: 0039 02 96 55 086 email: rheavendors@rheavendors.com exclusive property of rheavendors group

mixer		
Pos.	**Code**	**Description**
1	GUA0000084	OR 3131 RED SILICONE A60
2	Z0080100005	MOTOR MIXER BASE
3	Z0080100009IC	MIXER MOTOR SUPPORT RAL2011
4	Z0080100011	MIXER FAN
5	Z0080100102	MIXER SHAFT GASKET
6	Z0080100015	MIXER BUSH
7	Z0080100023IC	MIXER COVER RAL2011
8	Z0080100024	MIXER FAN
9	Z0090003023	MIXER MOTOR 24V DC SHAFT D.4
10/a_1	Z0080200110L	MIXING BOWL L.W/H20 BREAKER
10/a_2	Z0080200111R	MIXING BOWL R.W/H20 BREAKER
10/a_3	Z0080200112C	MIXING BOWL F.W/H20 BREAKER
10/b_1	Z0080200107L	MIXING BOWL L.W/O H2O BREAKER
10/b_2	Z0080200108R	MIXING BOWL R.W/O H2O BREAKER
10/b_3	Z0080200109C	MIXER BODY W/O LINE CENTER
11	Z0080100006IC	LOCK RING RAL2011
12/a	Z0080100031NA	MIXING BOWL EXTRACTOR D.4,25
12/b	Z0080100029CK	MIXING BOWL EXTRACTOR D.2,3
13	Z0080100095	TUBE REDUCER D.4
14	VIT0002401	SCREW ST HEAD CAP M3.5X9.5
100	Z0080100001R	§ MIXER BOWL BASE+MOTOR (from pos.1 to pos.9)

www.rheavendors.com tel: 0039 02 966 551 fax: 0039 02 96 55 086 email: rheavendors@rheavendors.com exclusive property of rheavendors group

boiler

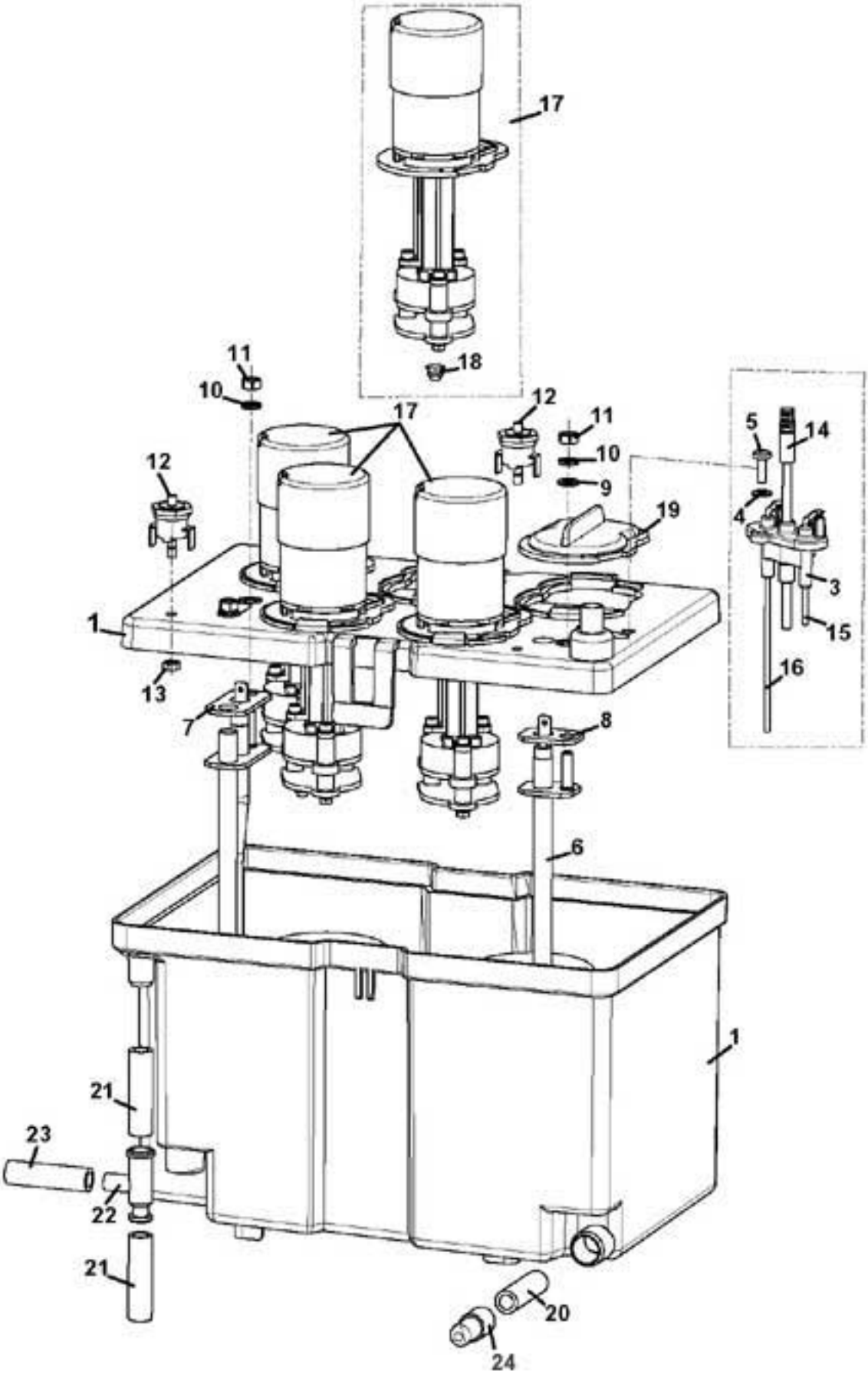

www.rheavendors.com tel: 0039 02 966 551 fax: 0039 02 96 55 086 email: rheavendors@rheavendors.com exclusive property of rheavendors group

boiler		
Pos.	**Code**	**Description**
1	Z0600014111R	§ TANK+BOILER COVER
3	Z0600016089	PROBE SUPPORT
4	VIT0003211	WASHER 4,3X9X0,8
5	VIT0001005	SCREW HEAD TAP CAP M4X12
6	Z0600016138R	§ HEATING ELEMENT 1600W 230V
7	Z0600014113-02	HEATING ELEM GASKET
8	Z0600014114-01	BOILER STRENGHT GASKET 5P
9	VIT0003203	WASHER 5,3X10X1
10	VIT0003111	SPRING WASHER 5,3
11	VIT0004804	NUT M5
12	ELE0000965	CLIXSON 88°
13	VIT0004816	NUT M4
14	ELE0000978R	SOLUBLES PROBE 80MM
15	Z0600016054	MAXIMUM LEVEL PROBE
16	Z0600016053	MINIMUM LEVEL PROBE
17	Z0600016405R	§ BOILER PUMP
18	Z0080100102	MIXER SHAFT GASKET
19	Z0600016422	PUMP LID
20/a	TSIL10/14T-10	SILICON HOSE 10X14 MT.10
20/b	TSIL10/14T-50	SILICON HOSE 10X14 MT.50
21/a	TSIL07/11T-10	SILICON HOSE 7X11 MT.10
21/b	TSIL07/11T-50	SILICON HOSE 7X11 MT.50
22	Z0600016028	T CONNECTOR
23/a	TSIL05/08T-10	SILICON HOSE 5X8 MT.10
23/b	TSIL05/08T-50	SILICON HOSE 5X8 MT.50
24	650001057	DRAINER PLUG
100	Z0600014100R2	§ BOILER 4PUMP
101	Z0600014101R2	§ BOILER 3PUMP 1600W 230V
102	Z0600014102R2	§ BOILER 5PUMP 1600W 230V

www.rheavendors.com tel: 0039 02 966 551 fax: 0039 02 96 55 086 email: rheavendors@rheavendors.com exclusive property of rheavendors group

distribution pipes movement

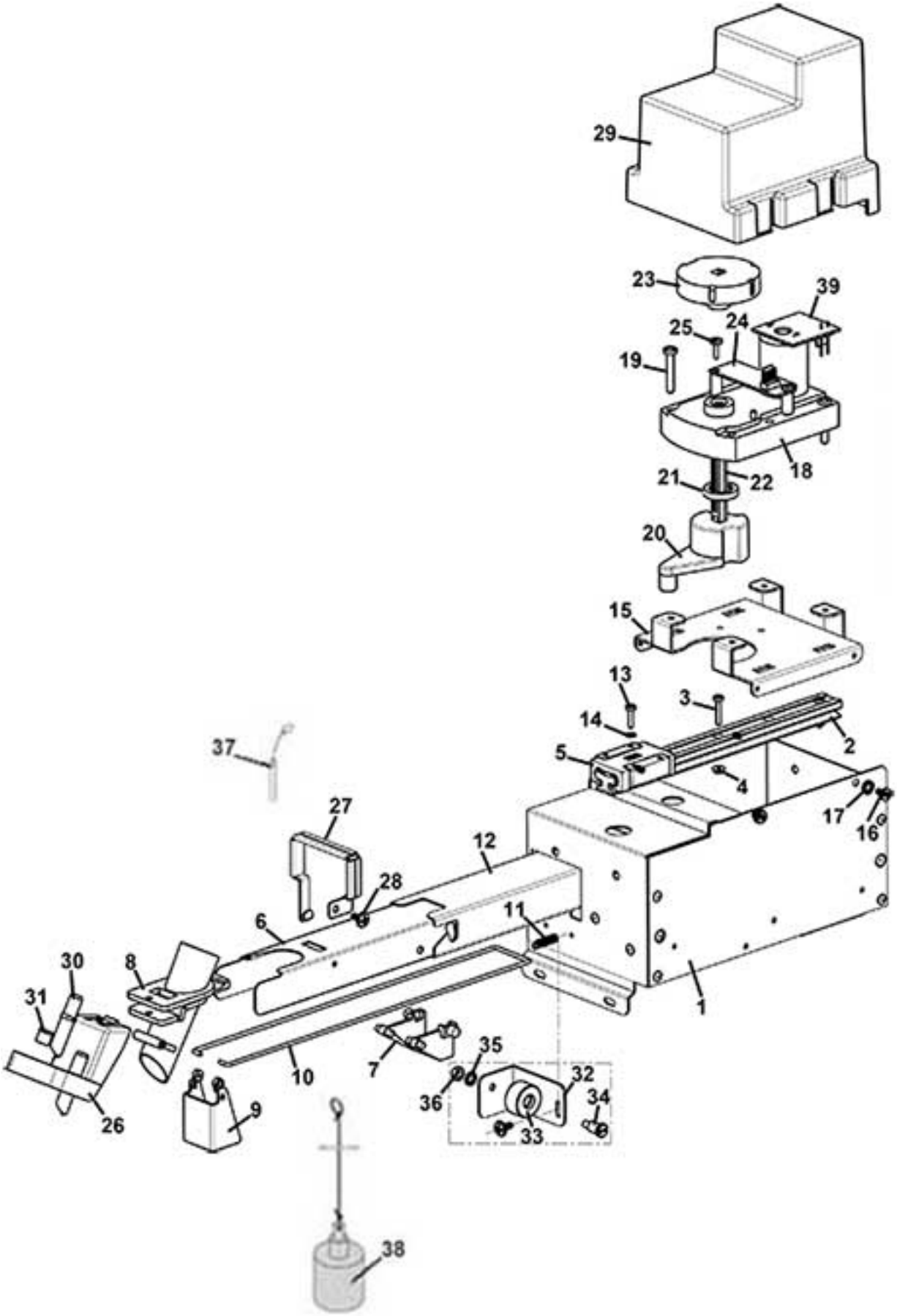

www.rheavendors.com tel: 0039 02 966 551 fax: 0039 02 96 55 086 email: rheavendors@rheavendors.com exclusive property of rheavendors group

distribution pipes movement		
Pos.	**Code**	**Description**
1	Z0380010827-03	PIPE MOVEMENT HOUSING
2	Z0380010796	NOZZLE HOLDER
3	VIT0000006	SCREW HEAD TAP CAP M3X16
4	VIT0004701	NUT M3
5	Z0380010798	NOZZLE MOVEMENT GUIDE
6	Z0380010821	NOZZLE HOLDER
7	Z0380010599	NOZZLE MOVEMENT BUTTON
8	Z0380011229NA	SUGAR CHUTE
9	Z0380010424NA	SUGAR SPLITTER
10	Z0380010823	BRACKET
11	Z0380010431	SPRING
12	Z0380010826	NOZZLE MOVEMENT SLIDE
13	VIT0000005	SCREW HEAD TAP CAP M3X12
14	VIT0003102	SPRING WASHER 3,2
15	Z0380010693	GEAR MOTOR SUPPORT
16	VIT0002009	SCREW ST HEAD CAP M3.5X6.5
17	VIT0003103	SPRING WASHER 4,3
18	Z0090002109	GEAR MOTOR 24 RPM 24V DC
19	VIT0000015	SCREW HEAD TAP CAP M4X25
20	Z0380010694	NOZZLE MOVEMENT CAM
21	Z0380010831	BUSH 20x4
22	Z0380009542	SUGAR DISPENSER SHAFT
23	Z0380009541	POSITION DISK NOZZLE MOVEMENT
24	SCH0003700	TUBES SENSOR
25	VIT0002009	SCREW ST HEAD CAP M3.5X6.5
26	Z0380010655NA/L	NOZZLES HOLDER
27	Z0380010882NA	CLAMP FIXING PIPES
28	VIT0002004	SCREW ST HEAD CAP M3.5X13
29	Z0380010695NA	NOZZLE MOVEMENT COVER BLACK
30	Z0380010657NA	ESPRESSO NOZZLE D. 5,7
31	Z0380010656NA	PLUG BLACK
32	Z0380012221	BRACKET
33	Z0380012225NA	BEARING
34	Z0200001012	PIN BEARING
35	VIT0004503	NUT M4
36	VIT0003103	SPRING WASHER 4,3
37	Z0380010429CL	§ FIXING PLATE PIN
38	Z0070020038CL2	§ WASTE FLOAT
39	SCH0003740	MOTOR FILTER
100	Z0380010792CL	§ ESPRESSO NOZZLES MOVEMENT From pos. 1 to pos. 25 and from pos. 32 to pos. 36+39

www.rheavendors.com tel: 0039 02 966 551 fax: 0039 02 96 55 086 email: rheavendors@rheavendors.com exclusive property of rheavendors group

1 GRINDER - VARIFLEX COFFEE GROUP HOUSING

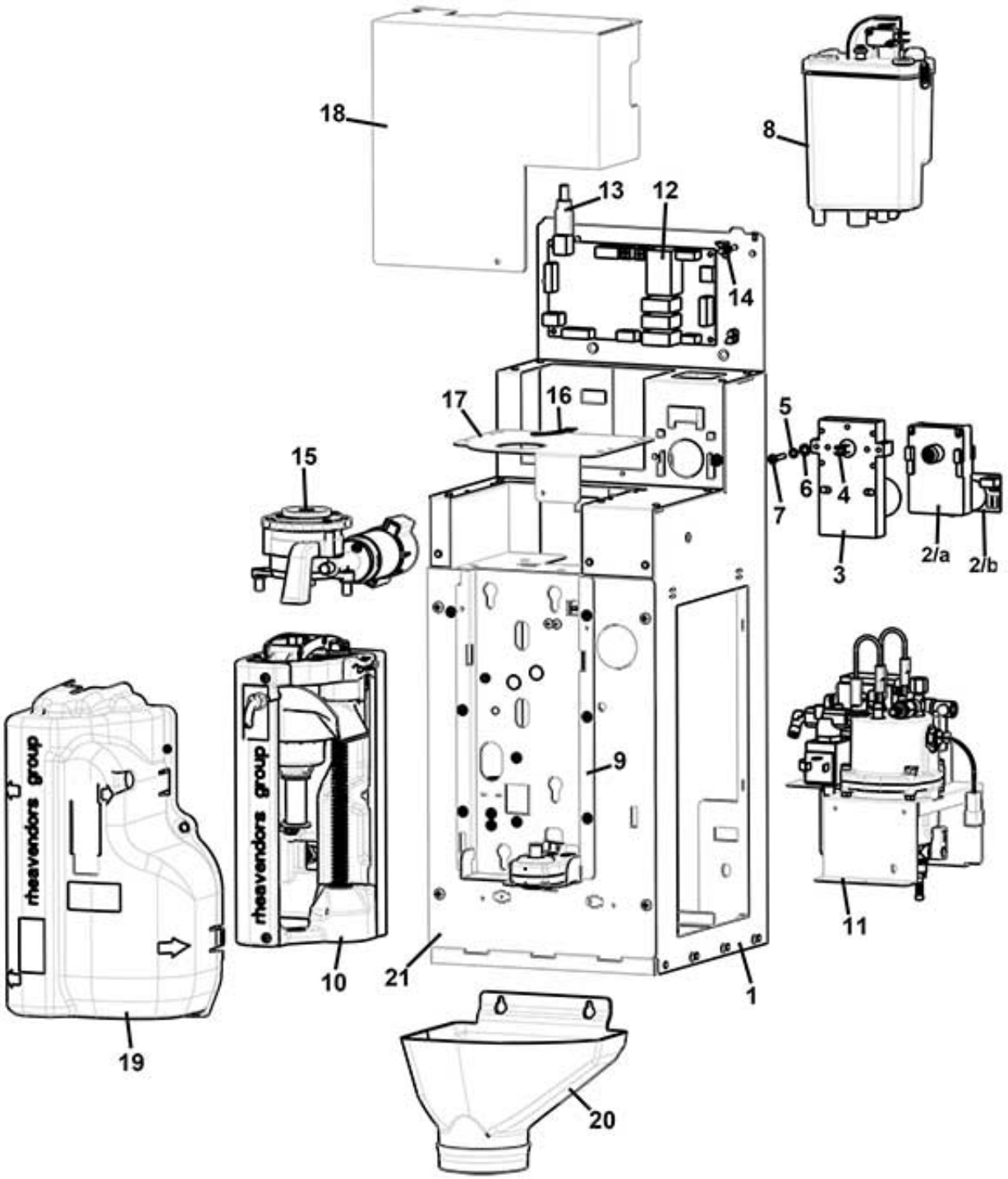

www.rheavendors.com tel: 0039 02 966 551 fax: 0039 02 96 55 086 email: rheavendors@rheavendors.com exclusive property of rheavendors group

1 GRINDER - VARIFLEX COFFEE GROUP HOUSING		
Pos.	**Code**	**Description**
1	Z0260014455-06	VARIF. HOUSING 1 BLACK GRINDER
2/a	Z0090002113	MOTOR 24 DC 97 RPM
2/b	SCH0003760	MOTOR FILTER
3	Z0090002082	MOTOR 24 DC 55 RPM
4	Z0230012010	PINION
5	VIT0003103	SPRING WASHER 4,3
6	Z0090002079	SPACER
7	VIT0000015	SCREW HEAD TAP CAP M4X25
8		See table water inlet panel
9		See table PRO BREWER SUPPORT+MOTOR
10		See table PROFESSIONAL BREWER GROUP D.45
11		See table ESPRESSO boiler support
12	BRD03002	2M FS COFFEE BREWER BOARD
13	ELT0030874	USB WIRING 1,5MT
14	ELE0062008	BOARD SUPPORT
15		See table GRINDER
16	Z0320004729	GRINDER REGULATION LABEL
17	Z0260014464	CONTAINER SUPPORT
18	Z0260011134	BOARD COVER
19	Z0250014074CL1	§ VARIFLEX BREWER COVER-FS
20	Z0070015151NA	GROUNDS CONTAINER
21	Z0260014463-03	1 GRINDER-VARIFLEX COFFEE GR.
100	Z0090002113R	§ GEARBOX MOTOR 24V DC+FILTER Pos.2/a+2/b

www.rheavendors.com tel: 0039 02 966 551 fax: 0039 02 96 55 086 email: rheavendors@rheavendors.com exclusive property of rheavendors group

2 GRINDER - VARIFLEX COFFEE GROUP HOUSING

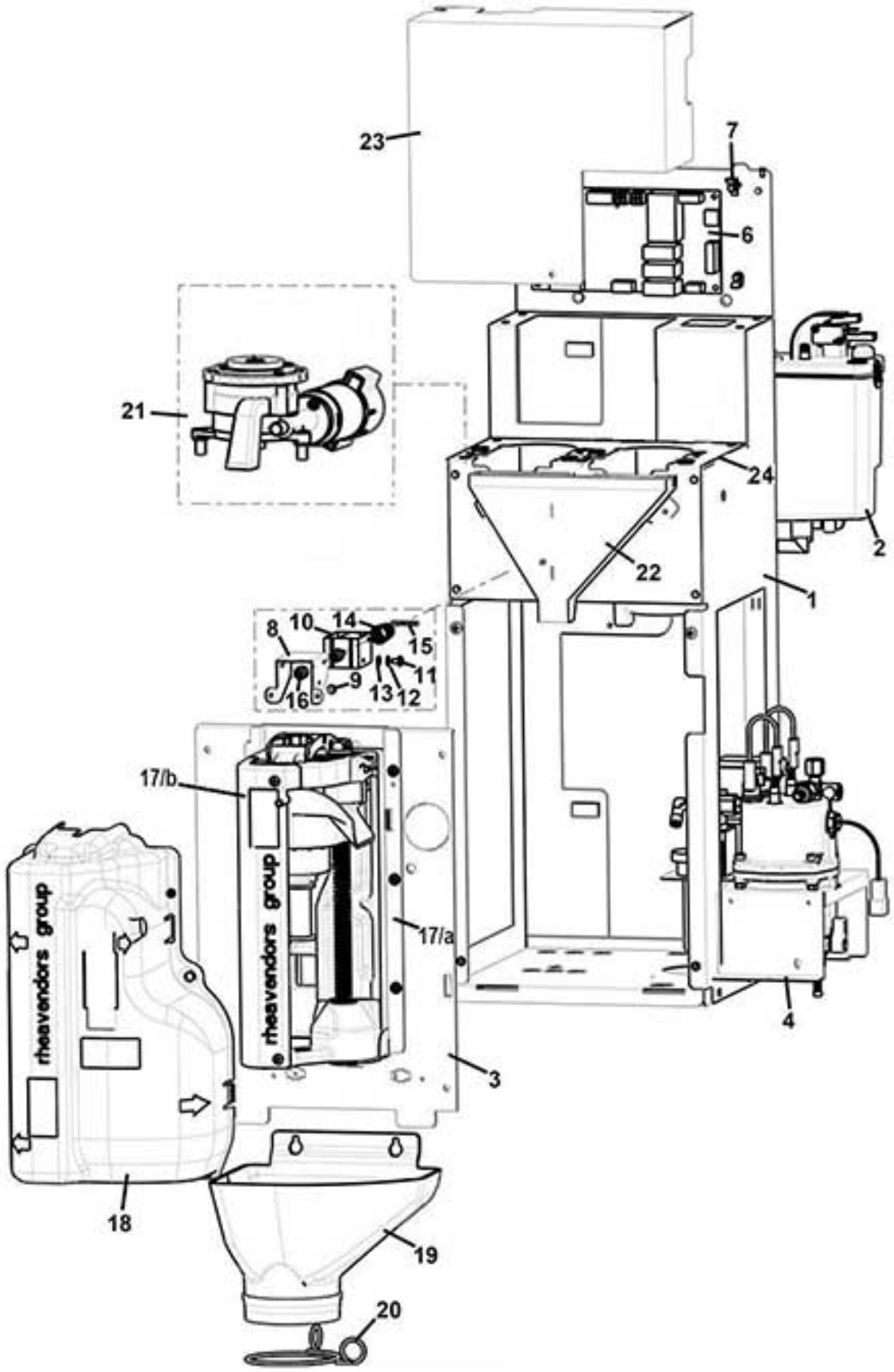

www.rheavendors.com tel: 0039 02 966 551 fax: 0039 02 96 55 086 email: rheavendors@rheavendors.com exclusive property of rheavendors group

2 GRINDER - VARIFLEX COFFEE GROUP HOUSING		
Pos.	**Code**	**Description**
1	Z0260014505-05	HOUSING VRFLX BREWER 2GRINDER
2		See table water inlet panel
3	Z02600154514-02	
4		See table ESPRESSO boiler support
6	BRD03002	2M FS COFFEE BREWER BOARD
7	ELE0062008	BOARD SUPPORT
8	Z0260014564	ELCTROMAGNET SUPPORT
9	VIT0002009	SCREW ST HEAD CAP M3.5X6.5
10	ELE0000062	15% 24VDC ELECTROMAGNET W/FAST
11	VIT0000021	SCREW HEAD TAP CAP M4X6
12	VIT0003003	WASHER 4,3X8X0,8
13	VIT0003103	SPRING WASHER 4,3
14	Z0380011419	SPRING
15	VIT0005212	DOWEL PIN 2.5X24
16	Z0260013022	PIN
17/a		See table PRO BREWER SUPPORT+MOTOR
17/b		See table PROFESSIONAL BREWER GROUP D.45
18	Z0250014074CL1	§ VARIFLEX BREWER COVER-FS
19	Z0070015151NA	GROUNDS CONTAINER
20	Z0070015149	GROUNDS BAG FIXING SPRING
21		See table GRINDER
22	Z0320005161NA	COFFEE CHUTE 2 GRINDER
23	Z0260014512	BOARD COVER
24	Z0260014511-01	COFFEE BEANS CONTAINER SUPPORT

www.rheavendors.com tel: 0039 02 966 551 fax: 0039 02 96 55 086 email: rheavendors@rheavendors.com exclusive property of rheavendors group

PRO BREWER SUPPORT+MOTOR

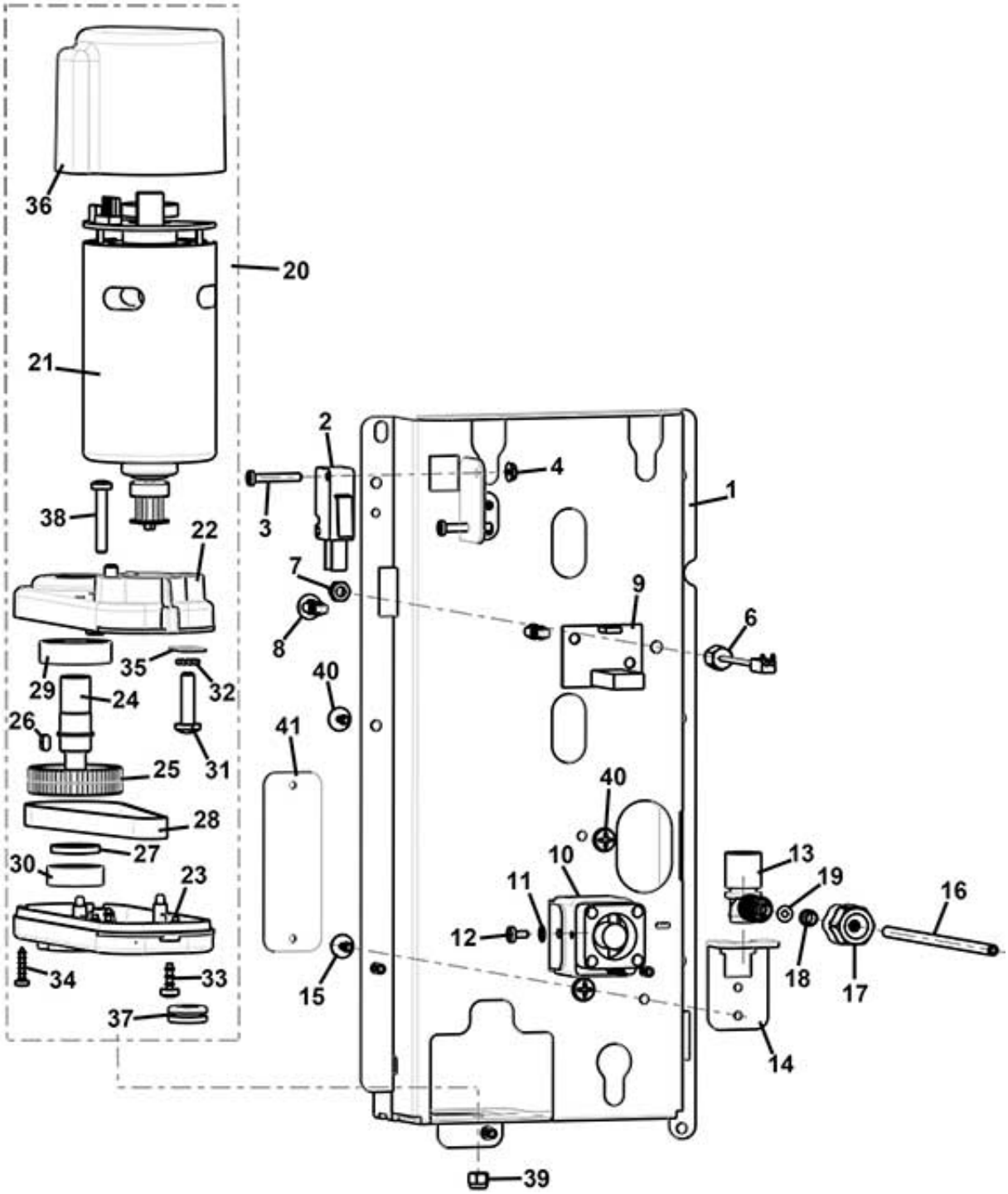

www.rheavendors.com tel: 0039 02 966 551 fax: 0039 02 96 55 086 email: rheavendors@rheavendors.com exclusive property of rheavendors group

PRO BREWER SUPPORT+MOTOR		
Pos.	**Code**	**Description**
1	Z0260014042	VARIFLEX BREWER SUPPORT
2	ELE0001522	MICROSWITCH
3	VIT0000006	SCREW HEAD TAP CAP M3X16
4	VIT0004701	NUT M3
6	ELE0000931	PROBE NTC 10K/TE
7	VIT0004816	NUT M4
8	ELE0062020	BOARD SUPPORT
9		Heater board sold with code ELE0000467-02
10	ELE0000467-02	FAN HEATER 24V DC + BOARD
11	VIT0003102	SPRING WASHER 3,2
12	VIT0000002	SCREW HEAD TAP CAP M3X6
13	Z0250014084-02	FEMALE CONNECTOR
14	Z0260014009-01	H2O CONNECTOR SUPPORT
15	VIT0002009	SCREW ST HEAD CAP M3.5X6.5
16	TTEF02/04T	PTFE PIPE 2X4
17	Z0250014086	NUT
18	Z0100002014	LOCKING RING SO1-4
19	GUA0000061	OR 2010 VITON 80 BLACK
20	Z0090002250R	§ VARIFLEX BREW. GEARBOX MOTOR From pos. 21 to pos. 37 (new version components)
21	Z0090002252-01	§ MOTOR 24V DC New version
22	Z0090002222NA	MOTOR UPPER CASE RAL9005 New version
23	Z0090002223NA	MOTOR LOWER CASE RAL9005 New version
24	Z0090002224	FEMALE CONNECTOR SHAFT
25/a	Z0090002255AN	PULLEY New version from serial 20154600000
25/b		For machine built before Serial n. 20154599999 pls order motor Z0090002250R
26	VIT0006703	CLAMP
27	Z0090002226	SPACER
28/a	Z0090002258	BELT New version from serial 20154600000
28/b		For machine built before Serial n. 20154599999 pls order motor Z0090002250R
29	VIT0009324	BEARING
30	VIT0009320	BEARING
31	VIT0000017	SCREW HEAD TAP CAP M5X20
32	VIT0003104	SPRING WASHER 5,3
33	VIT0002469	SCREW HEAD TAP M3.5X10
34	VIT0002014	SCREW ST HEAD CAP M2.9X13
35	Z0090002240	MOTOR SPACER
36	Z0090002235CK	MR GV BOARD COVER R.7037
37	GUA0010501	ELECTRICAL GROMMET DG 7,5
38	VIT0000015	SCREW HEAD TAP CAP M4X25
39	VIT0004815	NUT M4
40	VIT0002401	SCREW ST HEAD CAP M3.5X9.5
41		PARTS NO MORE AVAILABLE
100	Z0250014086R2	§WATER INLET PIPE 0,27 mt From pos. 16 to pos. 19
101	Z0090002224R	§ FEMALE CONNECTOR SHAFT From pos.24 to pos.30 excluded pos.28

www.rheavendors.com tel: 0039 02 966 551 fax: 0039 02 96 55 086 email: rheavendors@rheavendors.com exclusive property of rheavendors group

PROFESSIONAL BREWER GROUP D.45

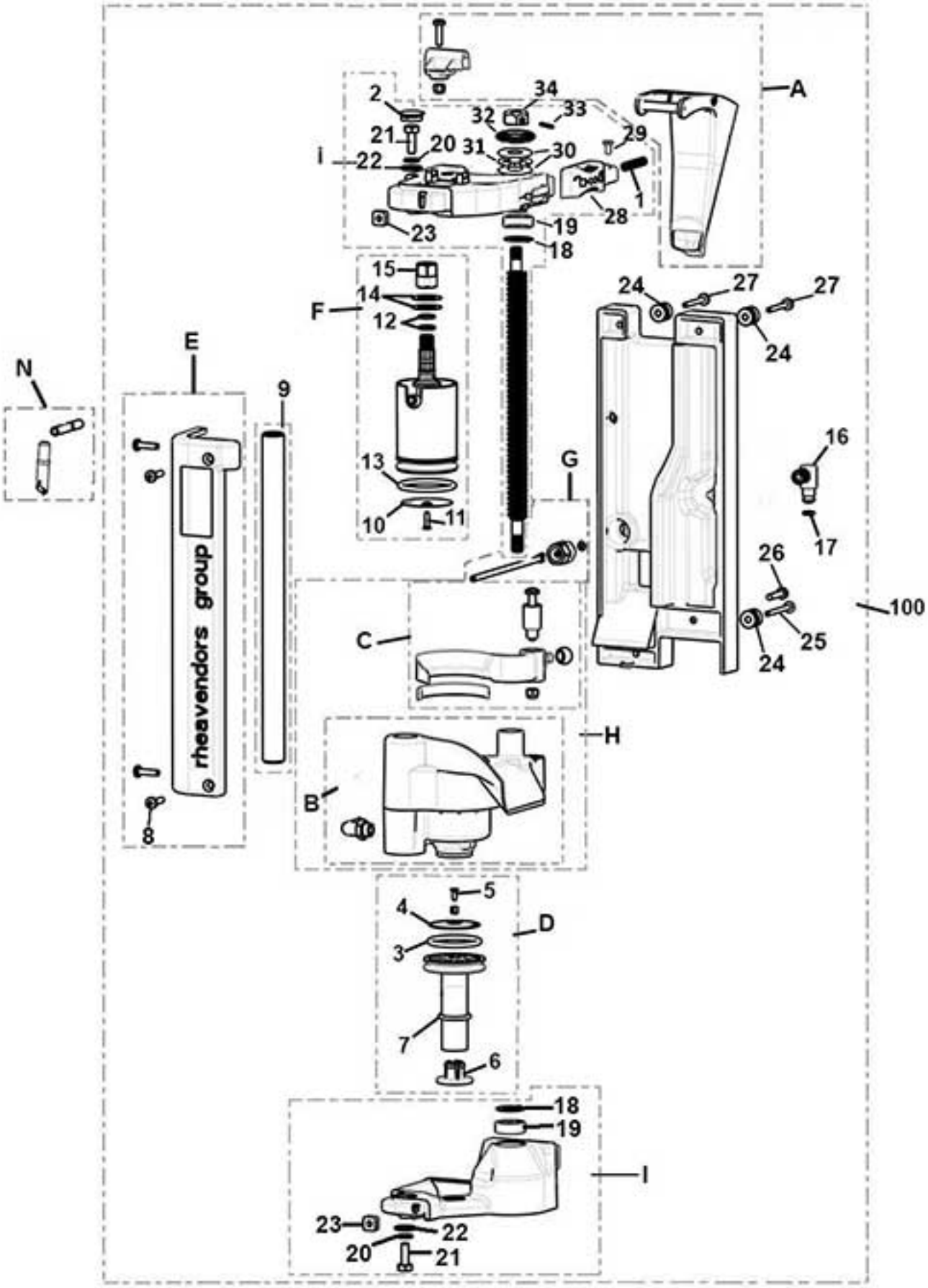

www.rheavendors.com tel: 0039 02 966 551 fax: 0039 02 96 55 086 email: rheavendors@rheavendors.com exclusive property of rheavendors group

PROFESSIONAL BREWER GROUP D.45		
Pos.	**Code**	**Description**
A	Z0250014008R	§ CHUTE D. 45
1	Z0250014081	SPRING
2	GUA0011022	PLUG
B	Z0250014022R	§ INFUSION CHAMBER D.45 included internal components and elbow
C	Z0250014024R	§ BRUSH D.45
D	Z0250014028R	§ LOWER FILTER HOLDER D.45
3	GUA0000097	OR 4131 RED SILICONE LSR70
4	Z0250014029	COFFEE FILTER DIAM. 37.3
5	VIT0000121	SCREW COUNT FLAT HEAD M3X8
6	Z0250014027R1	LOWER PISTON LOCK+SET SCREW
7	GUA0000103	OR 3075 SILICON
E	Z0250014019R	§ FRONTAL COVER
8	VIT0001009	SCREW HEAD TAP CAP M4X16
9	Z0250014013-04	CYLINDRICAL GUIDE
F	Z0250014045R	§ UPPER FILTER HOLDER D.45
10	Z0250008211	COFFEE FILTER 37,3
11	VIT0000129	SCREW COUNT HEAD M3X12
12	GUA0000045	OR 108 VITON 80 BLACK
13	GUA0000067	OR 4143 RED SILICONE LSR70
14	Z0250014048	SPRING
15	Z0250014086	NUT
16	Z0250014085	MALE CONNECTOR
17	GUA0000004	OR 104 NBR AL 75 BLACK
G	Z0250014086R	§ WATER INLET TUBE 0,15 mt
I	Z0250014005R2	§UPPER SUPPORT WITHOUT CHUTE
H	Z0250014020R	§ INFUSION CHAMBER D.45
L	Z0250014012R	§ LOWER SUPPORT
18	Z0250014077	SPACER
19	VIT0009320	BEARING
20	VIT0003113	SPRING WASHER 6,4
21	VIT0000249	SCREW HEX HEAD M6X16
22	Z0250014079	WASHER D.15 D.6,5 SP.1,5
23	VIT0009112	NUT M4
24	Z0250014072	PIN
25	VIT0000033	SCREW HEAD TAP CAP M4X35
26	VIT0001011	SCREW HEAD TAP CAP M4X20
27	VIT0001006	SCREW HEAD TAP CAP M4X30
28	Z0250014082	BREWER STOPPER BUTTON
29	VIT0002009	SCREW ST HEAD CAP M3.5X6.5
30	VIT0009318	SPACER WASHER
31	VIT0009317	BEARING
32	GUA0001007	V RING GASKET VA16
33	VIT0007011	SET SCREW 4X4
34	Z0250014071	NUT M8
N	Z0250008132CL	§ COFFEE OUTLET PIPE
100	Z0250014000CL	COFFEE BREWER VARIFLEX D 45

www.rheavendors.com tel: 0039 02 966 551 fax: 0039 02 96 55 086 email: rheavendors@rheavendors.com exclusive property of rheavendors group

PROFESSIONAL BREWER GROUP D.36

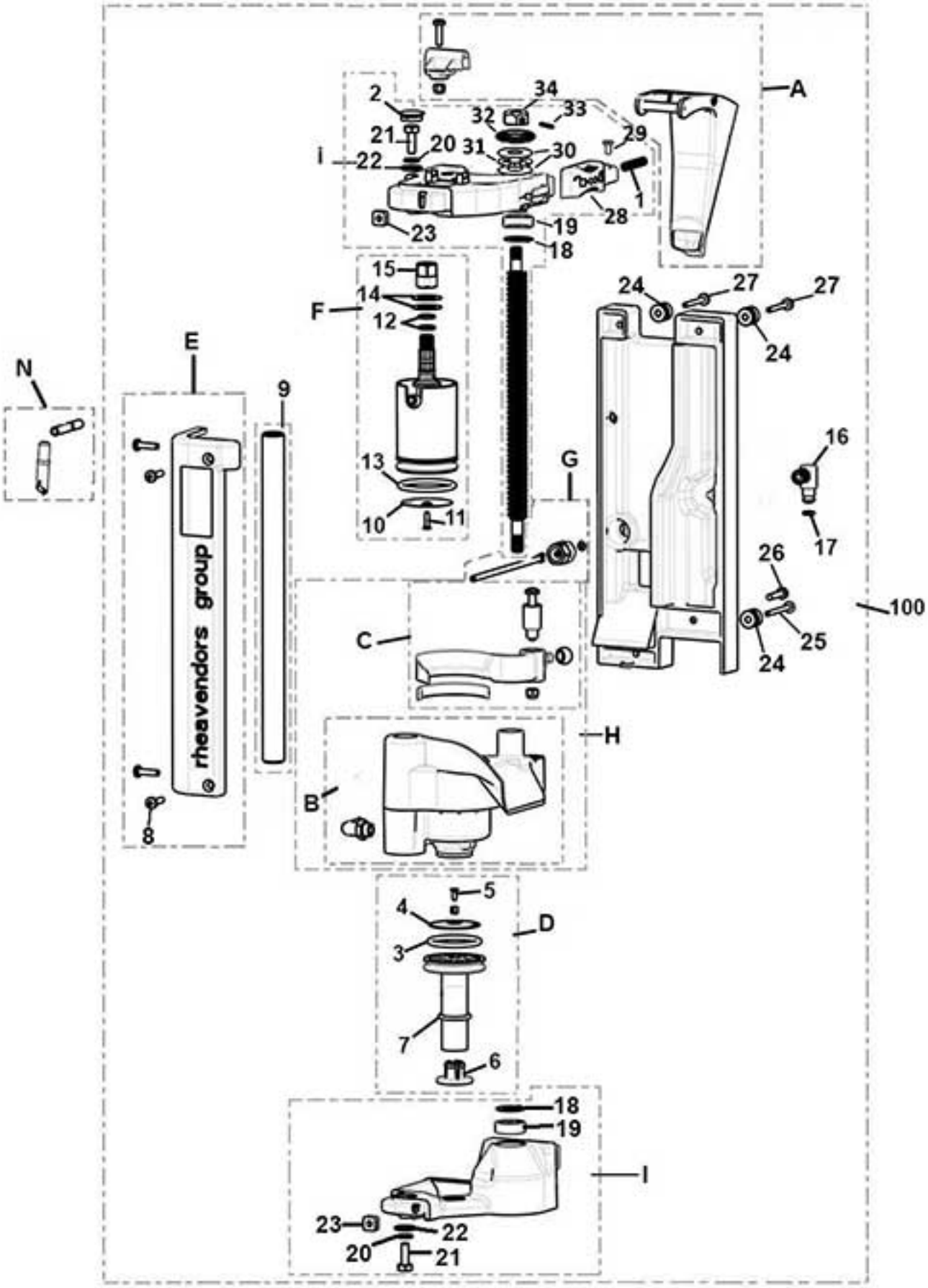

www.rheavendors.com tel: 0039 02 966 551 fax: 0039 02 96 55 086 email: rheavendors@rheavendors.com exclusive property of rheavendors group

PROFESSIONAL BREWER GROUP D.36		
Pos.	**Code**	**Description**
A	Z0250014033R	§ CHUTE D. 36
1	Z0250014081	SPRING
2	GUA0011022	PLUG
B	Z0250014032R	§ INFUSION CHAMBER D.36 included internal components and elbow
C	Z0250014034R	§ BRUSH D.36
D	Z0250014038R	§ LOWER FILTER HOLDER D.36
3	GUA0000080	OR 4112 RED SILICONE LSR70
4	Z0250008019	COFFEE FILTER
5	VIT0000121	SCREW COUNT FLAT HEAD M3X8
6	Z0250014027R1	LOWER PISTON LOCK+SET SCREW
7	GUA0000103	OR 3075 SILICON
E	Z0250014019R	§ FRONTAL COVER
8	VIT0001009	SCREW HEAD TAP CAP M4X16
9	Z0250014013-04	CYLINDRICAL GUIDE
F	Z0250014040R	§ UPPER FILTER HOLDER D.36
10	Z0250008099	COFFEE FILTER 33,4
11	VIT0000129	SCREW COUNT HEAD M3X12
12	GUA0000045	OR 108 VITON 80 BLACK
13	GUA0000080	OR 4112 RED SILICONE LSR70
14	Z0250014048	SPRING
15	Z0250014086	NUT
16	Z0250014085	MALE CONNECTOR
17	GUA0000004	OR 104 NBR AL 75 BLACK
G	Z0250014086R	§ WATER INLET TUBE 0,15 mt
H	Z0250014030R	§ CHAMBER D.36
I	Z0250014005R2	§UPPER SUPPORT WITHOUT CHUTE
L	Z0250014012R	§ LOWER SUPPORT
18	Z0250014077	SPACER
19	VIT0009320	BEARING
20	VIT0003113	SPRING WASHER 6,4
21	VIT0000249	SCREW HEX HEAD M6X16
22	Z0250014079	WASHER D.15 D.6,5 SP.1,5
23	VIT0009112	NUT M4
24	Z0250014072	PIN
25	VIT0000033	SCREW HEAD TAP CAP M4X35
26	VIT0001011	SCREW HEAD TAP CAP M4X20
27	VIT0001006	SCREW HEAD TAP CAP M4X30
28	Z0250014082	BREWER STOPPER BUTTON
29	VIT0002009	SCREW ST HEAD CAP M3.5X6.5
30	VIT0009318	SPACER WASHER
31	VIT0009317	BEARING
32	GUA0001007	V RING GASKET VA16
33	VIT0007011	SET SCREW 4X4
34	Z0250014071	NUT M8
N	Z0250008132CL	§ COFFEE OUTLET PIPE
100	Z0250014060CL	§ COFFEE BREWER VARIFLEX D.36

www.rheavendors.com tel: 0039 02 966 551 fax: 0039 02 96 55 086 email: rheavendors@rheavendors.com exclusive property of rheavendors group

water inlet panel

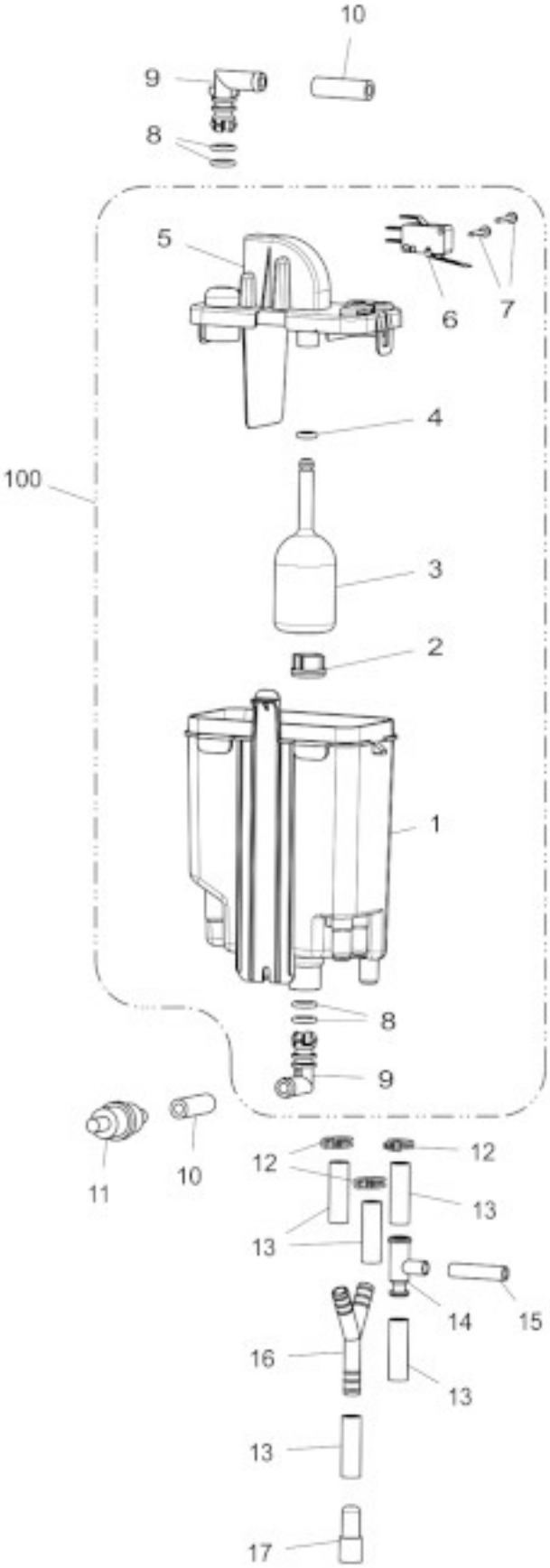

www.rheavendors.com tel: 0039 02 966 551 fax: 0039 02 96 55 086 email: rheavendors@rheavendors.com exclusive property of rheavendors group

water inlet panel		
Pos.	**Code**	**Description**
1	Z0800013041	AIR BREAK TANK
2	Z0110020007	PLASTIC FILTER DIAM. 20
3	Z0800013046	AIR BREAK WASTE FLOAT
4	GUA0000082	SILICON GASKET D.6
5	Z0800013043	AIR BREAK COVER
6	ELE0001514	MICROSWITCH 3A 125-250VA
7	VIT0002013	SCREW ST HEAD CAP M2.9X19
8	GUA0000043	OR 109 NBR AL 75 BLACK
9	Z0800009211	ELBOW CONNECTOR
10/a	TSIL06/11T-10	SILICON HOSE 6X11 MT.10
10/b	TSIL06/11T-50	SILICON HOSE 6X11 MT.50
11	Z0109002002	H2O FILTER
12	FASC000109	CLAMP
13/a	TSIL07/11T-10	SILICON HOSE 7X11 MT.10
13/b	TSIL07/11T-50	SILICON HOSE 7X11 MT.50
14	Z0600016028	T CONNECTOR
15/a	TSIL05/08T-10	SILICON HOSE 5X8 MT.10
15/b	TSIL05/08T-50	SILICON HOSE 5X8 MT.50
16	Z0100001065	CONNECTOR "Y"
17	650001057	DRAINER PLUG
100	Z0800014001R	§ AIR BREAK FS

www.rheavendors.com tel: 0039 02 966 551 fax: 0039 02 96 55 086 email: rheavendors@rheavendors.com exclusive property of rheavendors group

ESPRESSO boiler support

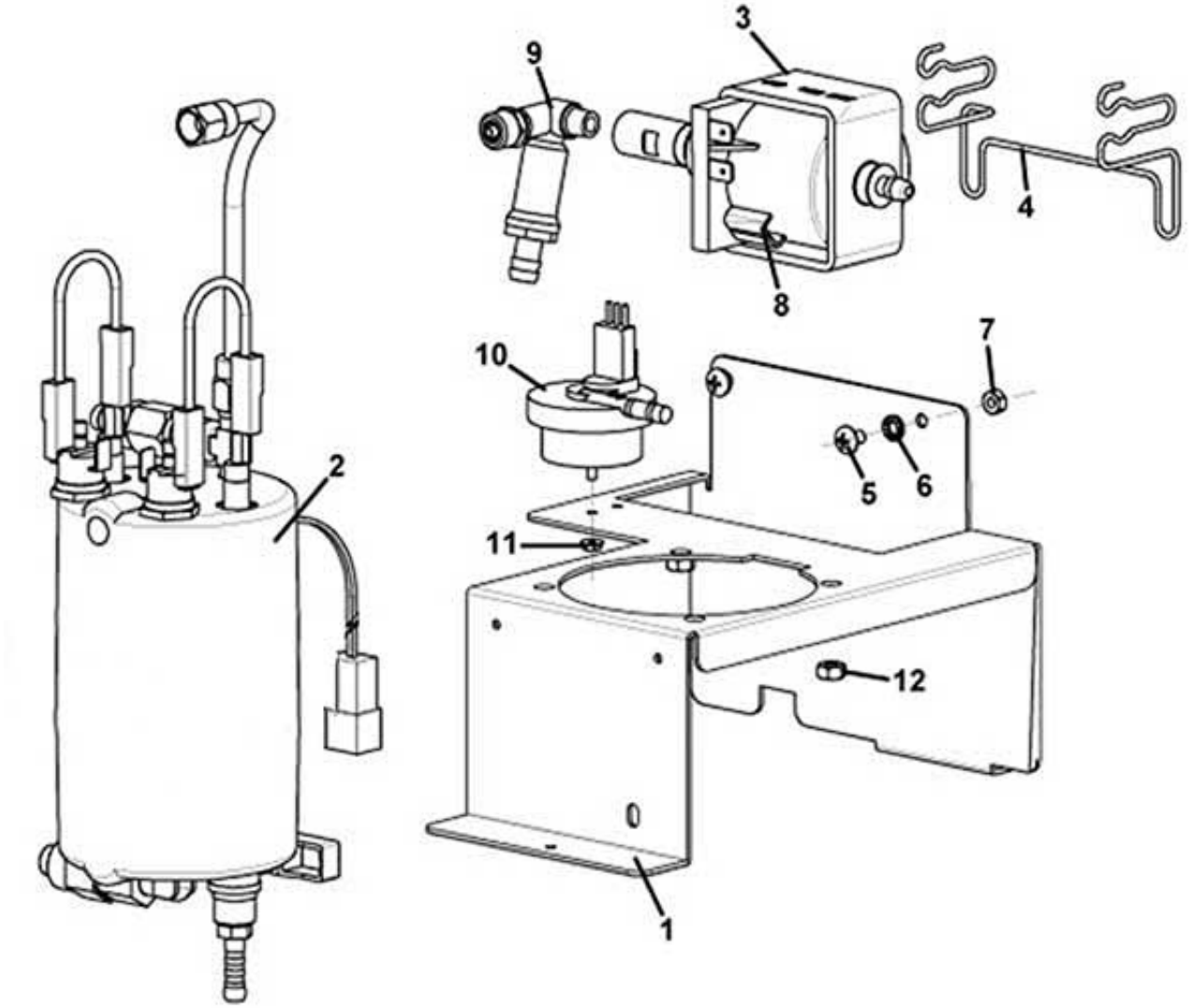

www.rheavendors.com tel: 0039 02 966 551 fax: 0039 02 96 55 086 email: rheavendors@rheavendors.com exclusive property of rheavendors group

ESPRESSO boiler support		
Pos.	**Code**	**Description**
1	Z0260014476	HYDRIC COMPONENTS SUPPORT
2		See table ESPRESSO BOILER
3	Z0110004041	PUMP EX5 230V-50HZ
4	Z0110004038	PUMP SUPPORT
5	VIT0000030	SCREW HEAD TAP CAP M4X7
6	VIT0003103	SPRING WASHER 4,3
7	VIT0004503	NUT M4
8	ELE0000915	PUMP THERMOPROTECTOR
9	Z0110004070	BY PASS VALVE 11 BAR
10	Z0110007003	VOLUMETRIC COUNTER
11	VIT0004701	NUT M3
12	VIT0004504	NUT M5

www.rheavendors.com tel: 0039 02 966 551 fax: 0039 02 96 55 086 email: rheavendors@rheavendors.com exclusive property of rheavendors group

ESPRESSO BOILER

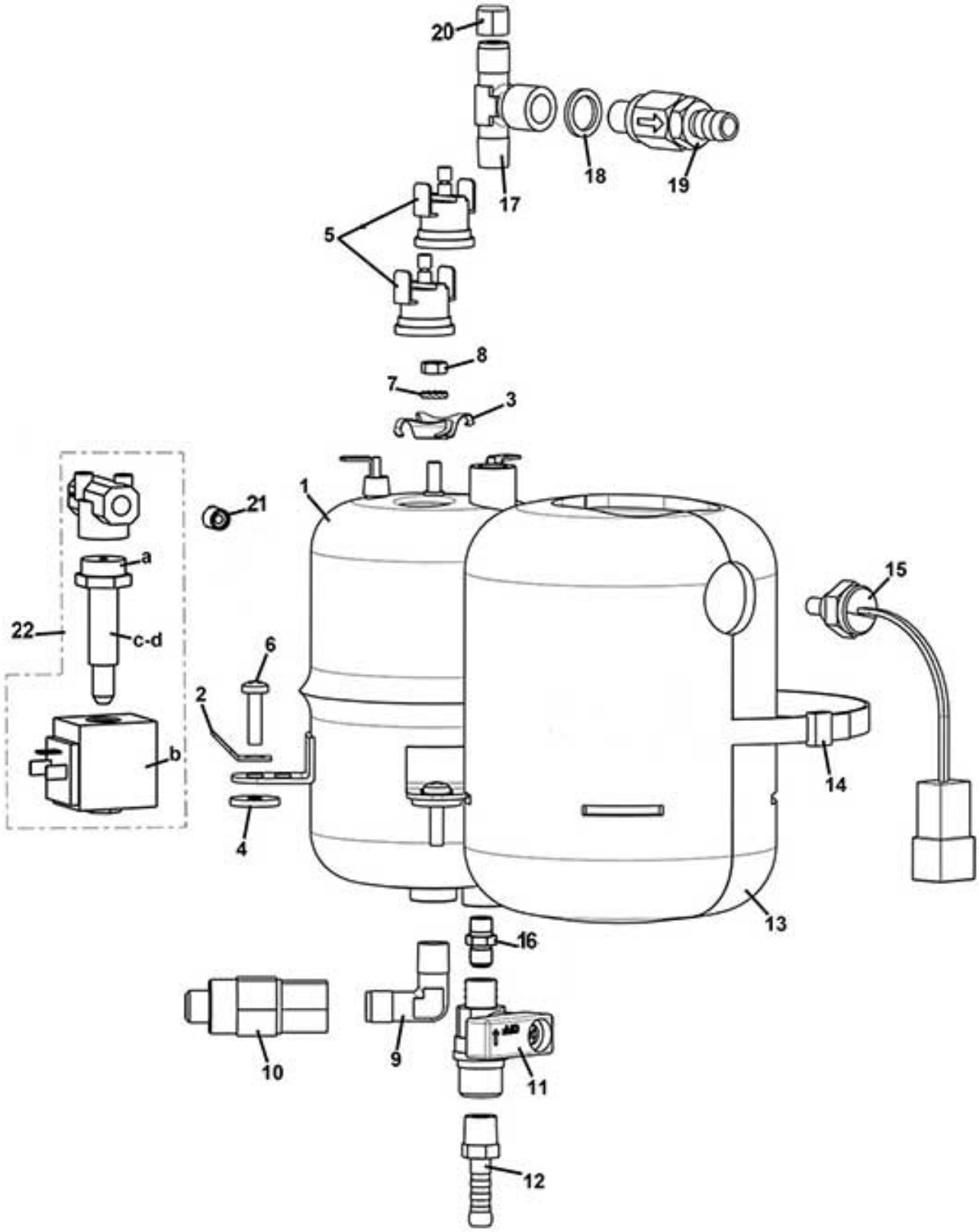

www.rheavendors.com tel: 0039 02 966 551 fax: 0039 02 96 55 086 email: rheavendors@rheavendors.com exclusive property of rheavendors group

ESPRESSO BOILER		
Pos.	**Code**	**Description**
1	Z0600019701CL	§ BOILER 1500 W 230V 400 CC (From pos.1 to pos. 8) from serial 20175100000
2	Z0600019012	GROUND WIRING
3	Z0600019188	THERMOSTAT CLIP
4	1600001098	RUBBER SPACER D. 4,5
5	ELE0000982	CLIXSON 127°
6	VIT0001008	STAINLESS STEEL SCREW T.C.B. M
7	VIT0003109	SPRING WASHER 4,3
8	VIT0004803	NUT M4
9	Z0100001019	ELBOW CONNECTOR SO2400-6-1/8
10	Z0110002029	SAFETY VALVE M:1/8GAS
11	Z0600019017	TAP M/F 1/8
12	Z0100001090	ELECTRICAL GROMMET D.7-1/8
13	Z0600019195	INSULATION SHELL
14	FASC000214	PLASTIC CLIP BLACK 7,8X365
15	ELE0000975	PROBE
16	Z0100001017	STRAIGHT CONNECT SO1100-6-1/8
17	Z0100001086	T CONNECTOR 1/8
18	Z0100003016	COPPER GASKET D.13.4X10.2X1.5
19	Z0110002013	SAFETY VALVE 1/8M D.9
20	Z0110004089	PLUG
21	Z0100001084	NIPPLE 1/8
22	Z0110001072	VALVE 3W 1/8 24DC O
22/a		
22/b	Z0110010065	COIL 8 W 24 DC
22/c_d		COMPONENT NO MORE SELLING
101	Z0600019787CL	§ STAINLESS STEEL BOILER 230V from serial 20175100000
102	KITX200038	UPGRADE KIT BOILER STAIN.STEEL Completed with the new support Up to serial 20175099999

www.rheavendors.com tel: 0039 02 966 551 fax: 0039 02 96 55 086 email: rheavendors@rheavendors.com exclusive property of rheavendors group

GRINDER

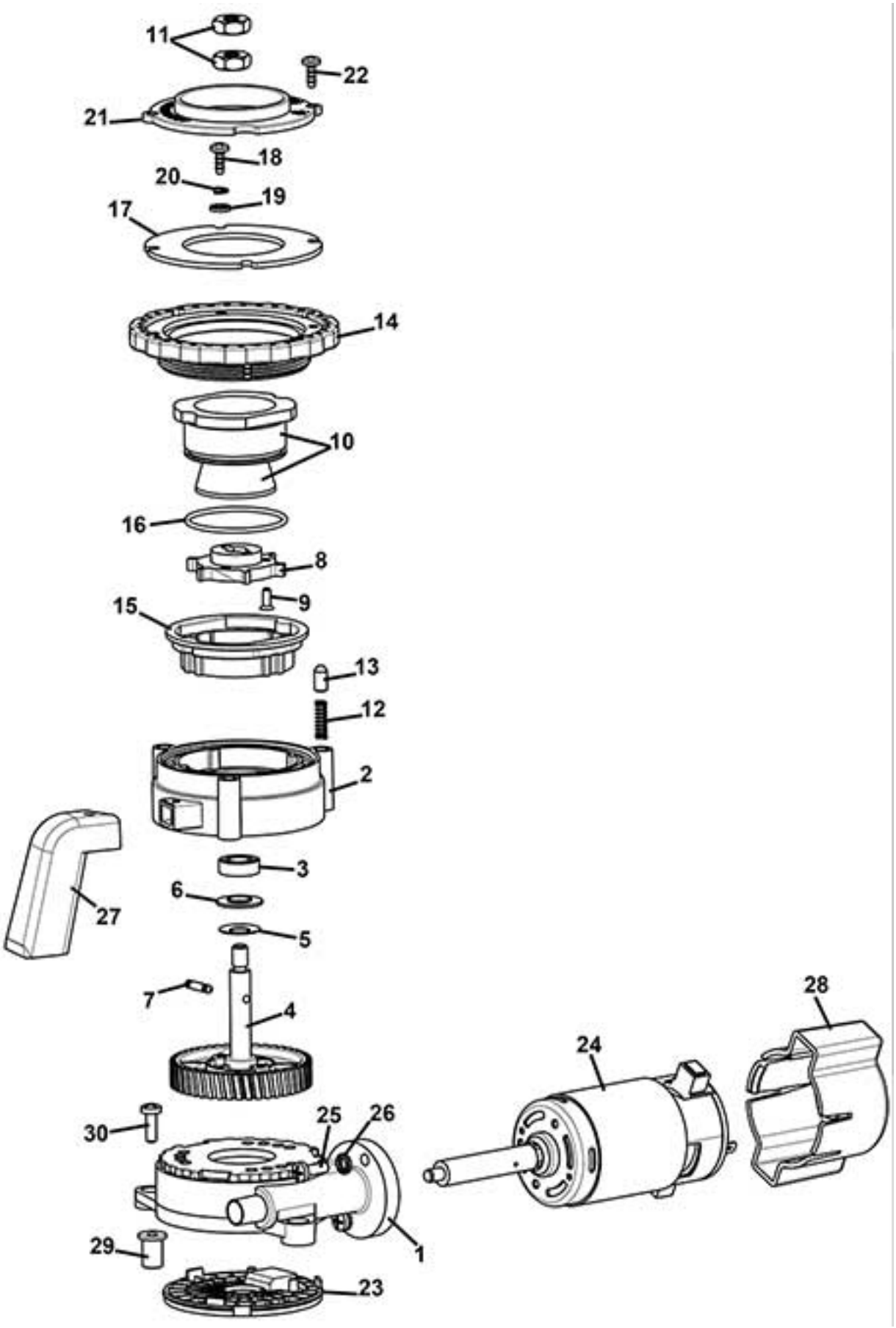

www.rheavendors.com tel: 0039 02 966 551 fax: 0039 02 96 55 086 email: rheavendors@rheavendors.com exclusive property of rheavendors group

GRINDER		
Pos.	**Code**	**Description**
1	Z0320001639NAR	§ MOTOR SUPPORT BLACK+PLUG
2	Z0320001602NAR	GRINDER BLADES SUPPORT
3	VIT0009325	BEARING
4	Z0320001608R	§ WHEEL+SHAFT+MAGNETS
5	Z0320001629	CUP SPRING 16x8,2 SP. 0,4
6	Z0320001625	BUSH
7	Z0320001704	GRINDER ROTATION PIN REINFORCE
8	Z0320001636	EJECTOR
9	VIT0000121	SCREW COUNT FLAT HEAD M3X8
10	Z0320001680	CONIC BLADES PLUS
11	Z0320001642	LOWER GRINDER FIXING NUT
12	Z0320001643	SPRING D.4X15X0,6
13	Z0320001624	REGULATION PIN
14	Z0320001605NAR	§ REGULATION RING NUT BLACK
15	Z0320001635-03NA	GRINDER SUPPORT BLACK
16	GUA0000124	SILICONE OR 2137
17	Z0320001622	UPPER GRINDER FIXING
18	VIT0002010	SCREW ST HEAD CAP M3.5X9.5
19	VIT0003405	SPRING WASHER 4,3
20	VIT0003103	SPRING WASHER 4,3
21	Z0320001607NA	DUCT BLACK
22	VIT0002010	SCREW ST HEAD CAP M3.5X9.5
23	Z0320001604NA	PLUG BLACK
24	Z0090003047	GRINDER MOTOR 230V DC
25	VIT0000013	SCREW HEAD TAP CAP M4X12
26	VIT0003103	SPRING WASHER 4,3
27	Z0320004736-04	GRINDER CHUTE R.2011
28	Z0320001615NA	GRINDER SENSOR COVER BLACK
29	Z0320001628	NO-VIBRATION BUSH
30	VIT0000013	SCREW HEAD TAP CAP M4X12
100	Z0320001600CLAL	§ GRINDER PLUS-VARIFLEX BREWER From pos.1 to pos. 28
101	Z0320001600CLC	§ GRINDER PREGRINDED From pos.1 to pos. 28
102	Z0320001600CLC1	§ GRINDER B PREGRINDED+CALIBRA From pos.1 to pos. 28

www.rheavendors.com tel: 0039 02 966 551 fax: 0039 02 96 55 086 email: rheavendors@rheavendors.com exclusive property of rheavendors group

products container

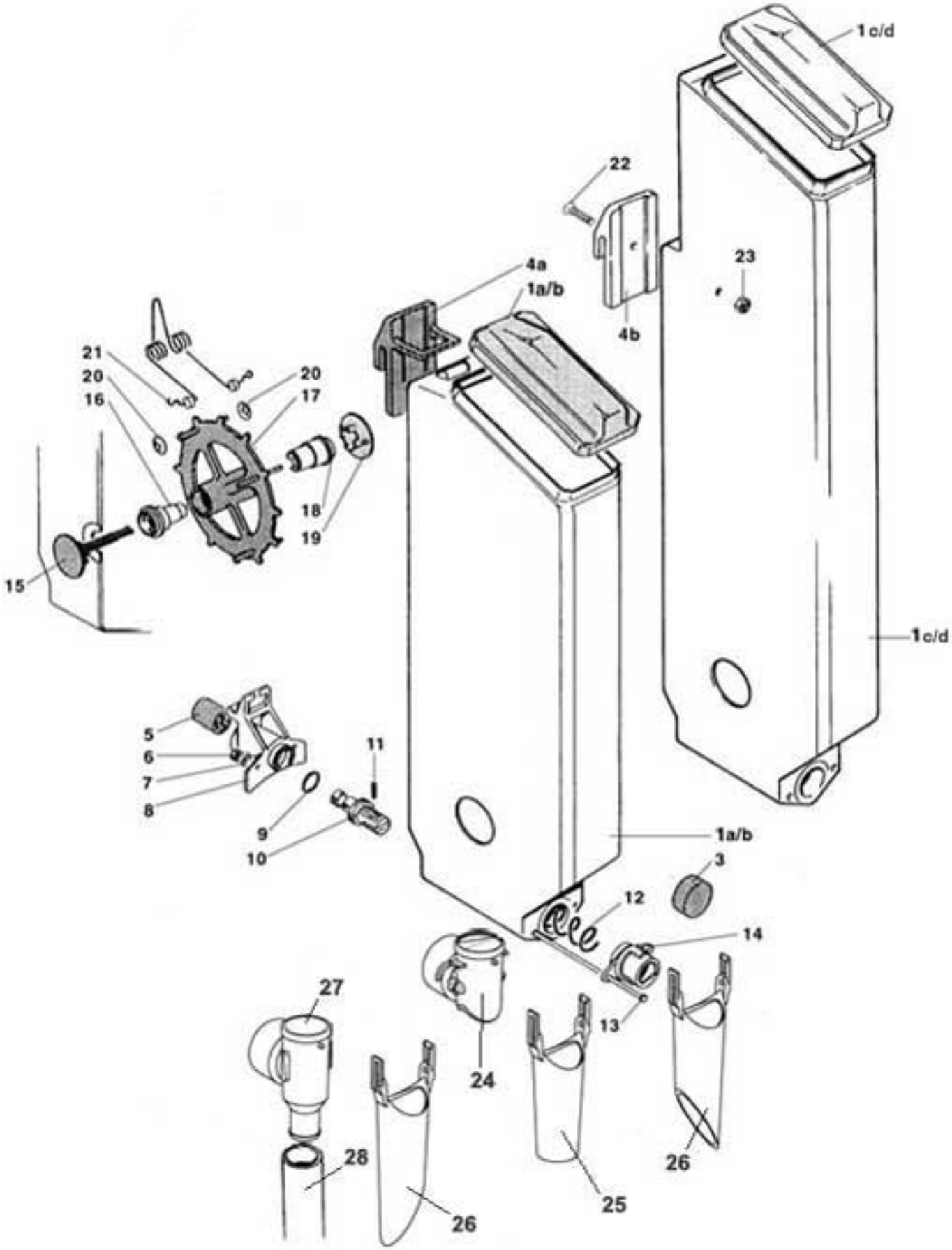

www.rheavendors.com tel: 0039 02 966 551 fax: 0039 02 96 55 086 email: rheavendors@rheavendors.com exclusive property of rheavendors group

products container		
Pos.	**Code**	**Description**
1/a	70003001AR	§ CANISTER "A"+LID
1/b	70003001BR	§ CANISTER "B"+LID
1/c	Z0230008003AR	§ CANISTER W/HOLE H.650+LID
1/d	Z0230008003BR	§ CANISTER W/O HOLE H.650+LID
3	70003061	SUGAR CHUTE PLUG
4/a	70003003	FIX PLATE
4/b	Z0230012018	FIX PLATE
5	Z0230012012	SQUARED PINION
6	VIT0004803	NUT M4
7	VIT0003202	WASHER 4,3X9X0,8
8	70003006	REAR BUSH
9	GUA0000015	OR 119 NBR AL 75 BLACK
10	Z0230012006	SPIRAL WITH FLANGE
11	VIT0005106	PIN 2X14
12/a	70003016	SPIRAL 18
12/b	Z0230024009	SPIRAL 9
13	70003010	BUSH CONNECTOR
14/a	70003008	FRONT BUSH
14/b	70003007	FRONT BUSH
14/c	Z0230012025	FRONT BUSH-REDUCED TRANSITION
15	70003028	PIN
16	70003027	BUSH
17	70003012	WHEEL (PLASTIC)
18	70003026	BUSH
19	70003029	DISK
20	VIT0007102	BENZING CLIP
21	11837	PRODUCT AGITATOR
22	VIT0001205	SCREW COUNT FLAT HEAD M4X12
23	VIT0004810	NUT M4
24	Z0230030302IC	INGRED.CHUTE CONNECTOR RAL2011
25	Z0232300041R3	§INGREDIENT CHUTE-FRONTAL
26	Z0230030304R3	§ INGREDIENT CHUTE-LEFT ORANGE
27	Z0230016024	SUGAR CHUTE
28/a	TSIL15/19T-10	SILICON HOSE 15X19 MT.10
100	Z0230016005R	§ CANISTER SPIRAL 18
101	Z0230017007R	§ CANISTER WHEEL 9
102	Z0230017008R	§ CANISTER WHEEL 18
103	Z0230018009R	§ CANISTER AGITATOR 18
104	Z0230019005R	§ CANISTER AGITATOR 9-THE
105	Z0230019006R	§ CANISTER AGITATOR 18-THE
106	Z0230012012R	§ SQUARED PINION

www.rheavendors.com tel: 0039 02 966 551 fax: 0039 02 96 55 086 email: rheavendors@rheavendors.com exclusive property of rheavendors group

1 grinder coffee beans container

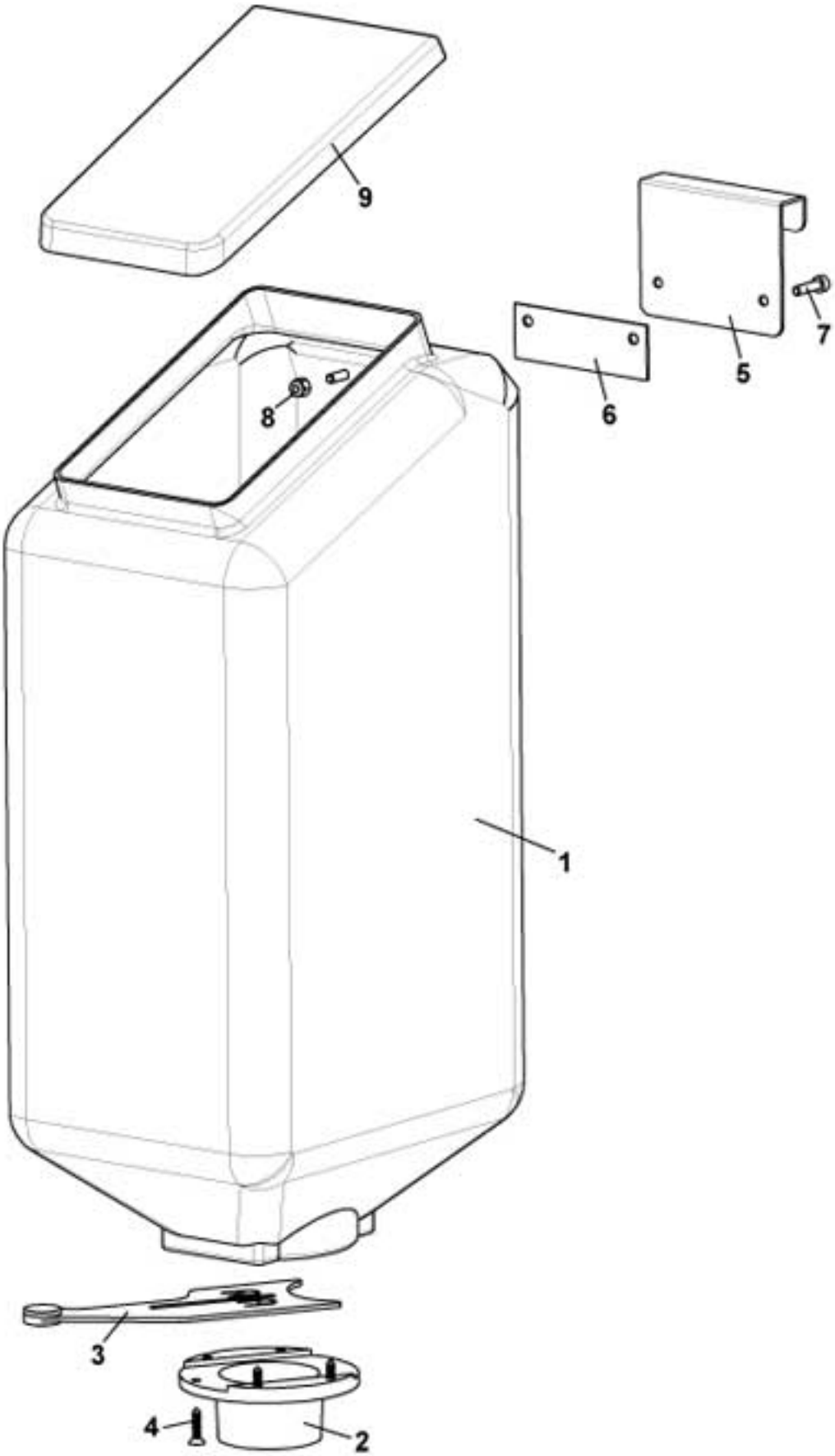

www.rheavendors.com tel: 0039 02 966 551 fax: 0039 02 96 55 086 email: rheavendors@rheavendors.com exclusive property of rheavendors group

1 grinder coffee beans container		
Pos.	**Code**	**Description**
1	Z0230030481R	§ COFFEE BEANS HOPPER 6KG pos. 1 + 9
2	Z0230030449NA	COFFEE BEANS HOPPER STOPPER
3	Z0230015207IC	COFFEE BEANS HOPPER STOPPER
4	VIT0002104	SCREW COUNT FLAT HEAD M3.9X16
5	Z0230030429	COFFEE CONTAINER CONNECTION
6	Z0230030426	PLATE
7	VIT0005519	SCREW TCEI 4x12 STAIL STEEL
8	VIT0004810	NUT M4
9	Z0230015057	COFFEE BEANS HOPPER LID
100	Z0230030415R7	§ COFFEE BEANS HOPPER 6 KG

www.rheavendors.com tel: 0039 02 966 551 fax: 0039 02 96 55 086 email: rheavendors@rheavendors.com exclusive property of rheavendors group

2 grinders coffee beans container

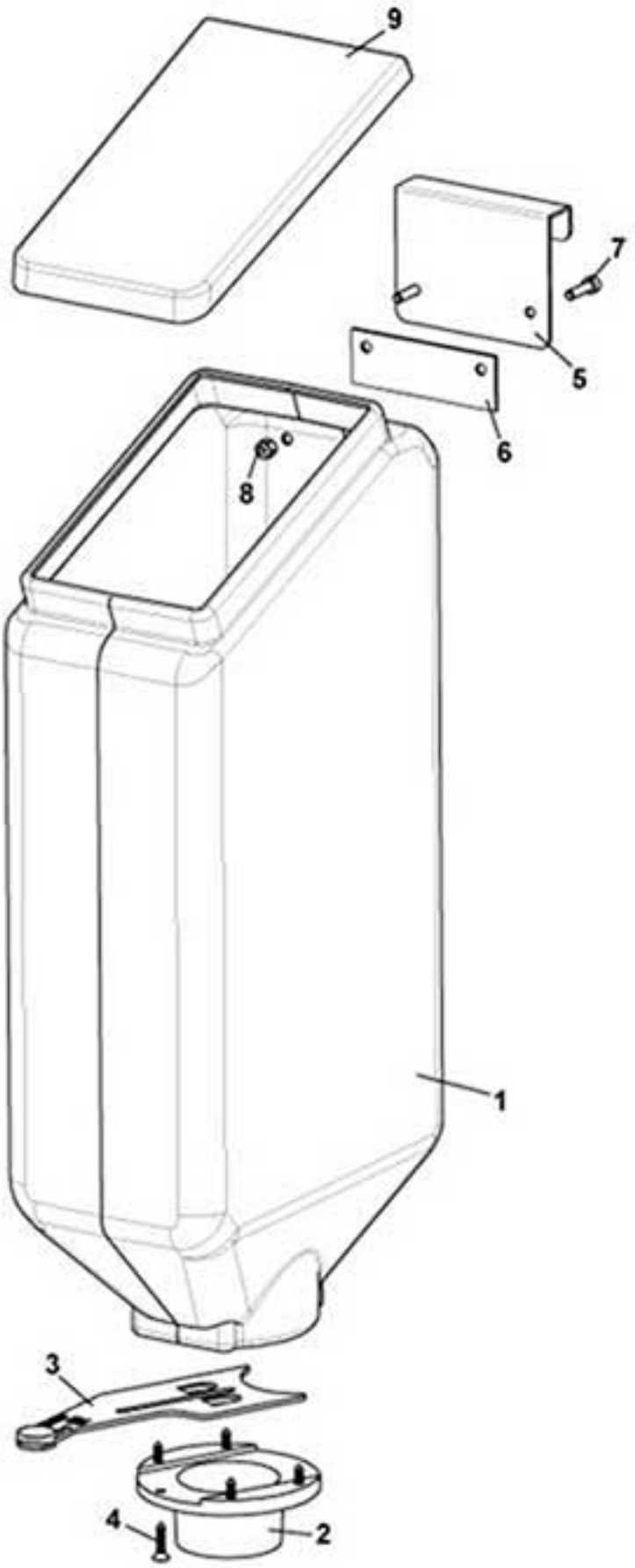

www.rheavendors.com tel: 0039 02 966 551 fax: 0039 02 96 55 086 email: rheavendors@rheavendors.com exclusive property of rheavendors group

2 grinders coffee beans container		
Pos.	**Code**	**Description**
1	Z0230030405	COFFEE BEANS HOPPER 2 GRINDER
2	Z0230030449NA	COFFEE BEANS HOPPER STOPPER
3	Z0230015207IC	COFFEE BEANS HOPPER STOPPER
4	VIT0002104	SCREW COUNT FLAT HEAD M3.9X16
5	Z0230030463	COFFEE BEANS HOP. FIXING PLATE
6	Z0230030426	PLATE
7	VIT0005519	SCREW TCEI 4x12 STAIL STEEL
8	VIT0004810	NUT M4
9	Z0230015057	COFFEE BEANS HOPPER LID

www.rheavendors.com tel: 0039 02 966 551 fax: 0039 02 96 55 086 email: rheavendors@rheavendors.com exclusive property of rheavendors group

control panel

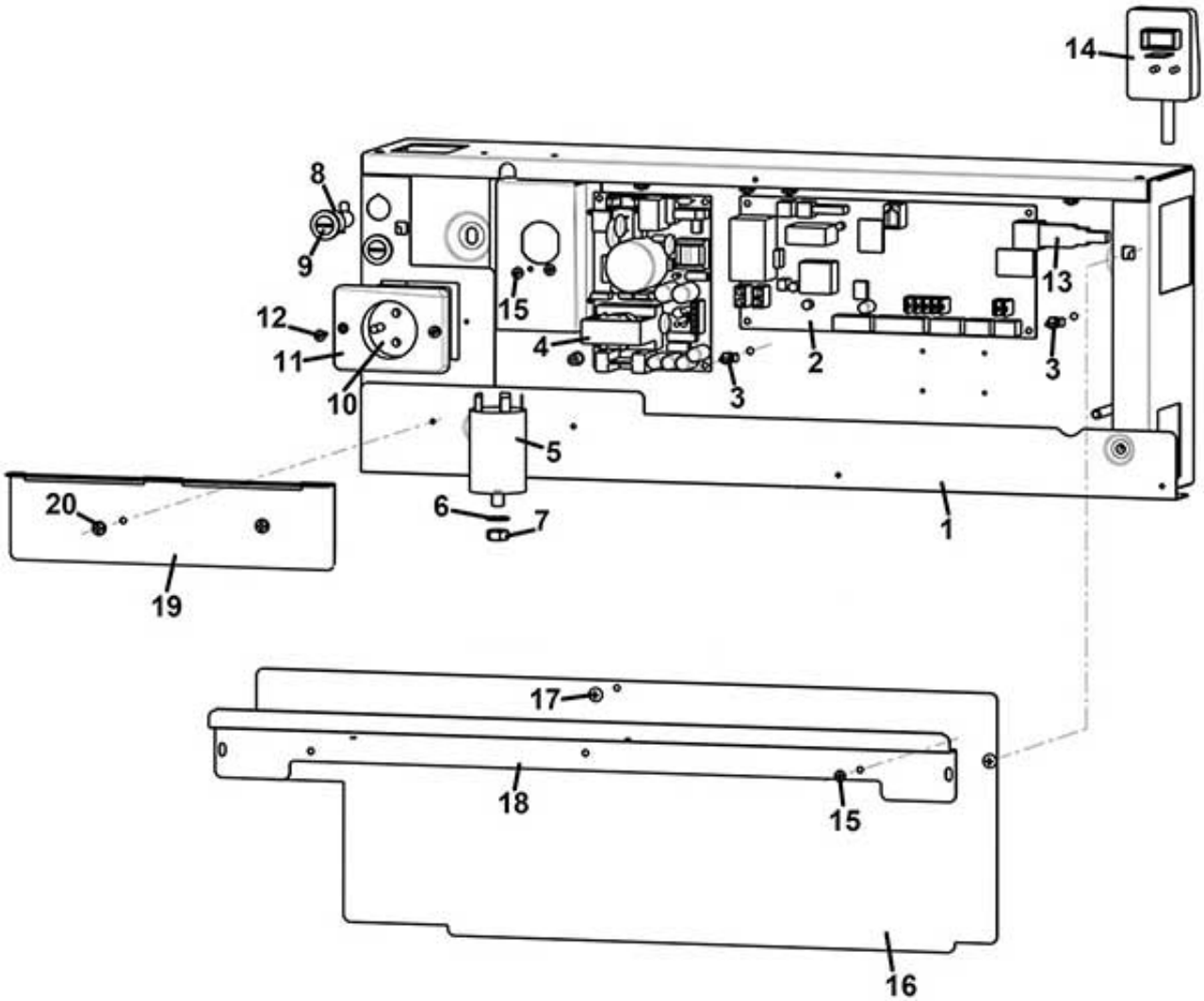

www.rheavendors.com tel: 0039 02 966 551 fax: 0039 02 96 55 086 email: rheavendors@rheavendors.com exclusive property of rheavendors group

control panel		
Pos.	**Code**	**Description**
1	Z0130012105-11	ELECTRICAL PANEL
2	BRD03003	POWER BOARD
3	ELE0062003	BOARD SUPPORT
4	SCHA161001	SWITCHING BOARD
5	ELE0009055	NOISE FILTER 16A
6	VIT0003106	WASHER D.8,2
7	VIT0004506	NUT M8
8	ELE0003507	FUSE HOLDER 250V 16A
9	ELE0003024	CERAMIC FUSE 6,3X32 12A
10	ELE0002306	GW PLUG
11	ELE0002307	ELECTRIC SOCKET 2 POSITION
12	VIT0002004	SCREW ST HEAD CAP M3.5X13
13	ELT0030874	USB WIRING 1,5MT
14	ELE0055003CL	SUPPLY CABLE
15	VIT0002009	SCREW ST HEAD CAP M3.5X6.5
16	Z0130012158	CONTROL PANEL COVER
17	VIT0000012	SCREW HEAD TAP CAP M4X10
18	Z0130012165	INGREDIENT CANISTER SUPPORT
19	Z0130012122	INGREDIENT CANISTER SUPPORT E2
20	VIT0002401	SCREW ST HEAD CAP M3.5X9.5

www.rheavendors.com tel: 0039 02 966 551 fax: 0039 02 96 55 086 email: rheavendors@rheavendors.com exclusive property of rheavendors group