vending machine

spare parts manual

www.rheavendors.com tel: 0039 02 966 551 fax: 0039 02 96 55 086 email: rheavendors@rheavendors.com exclusive property of rheavendors group

cabinet

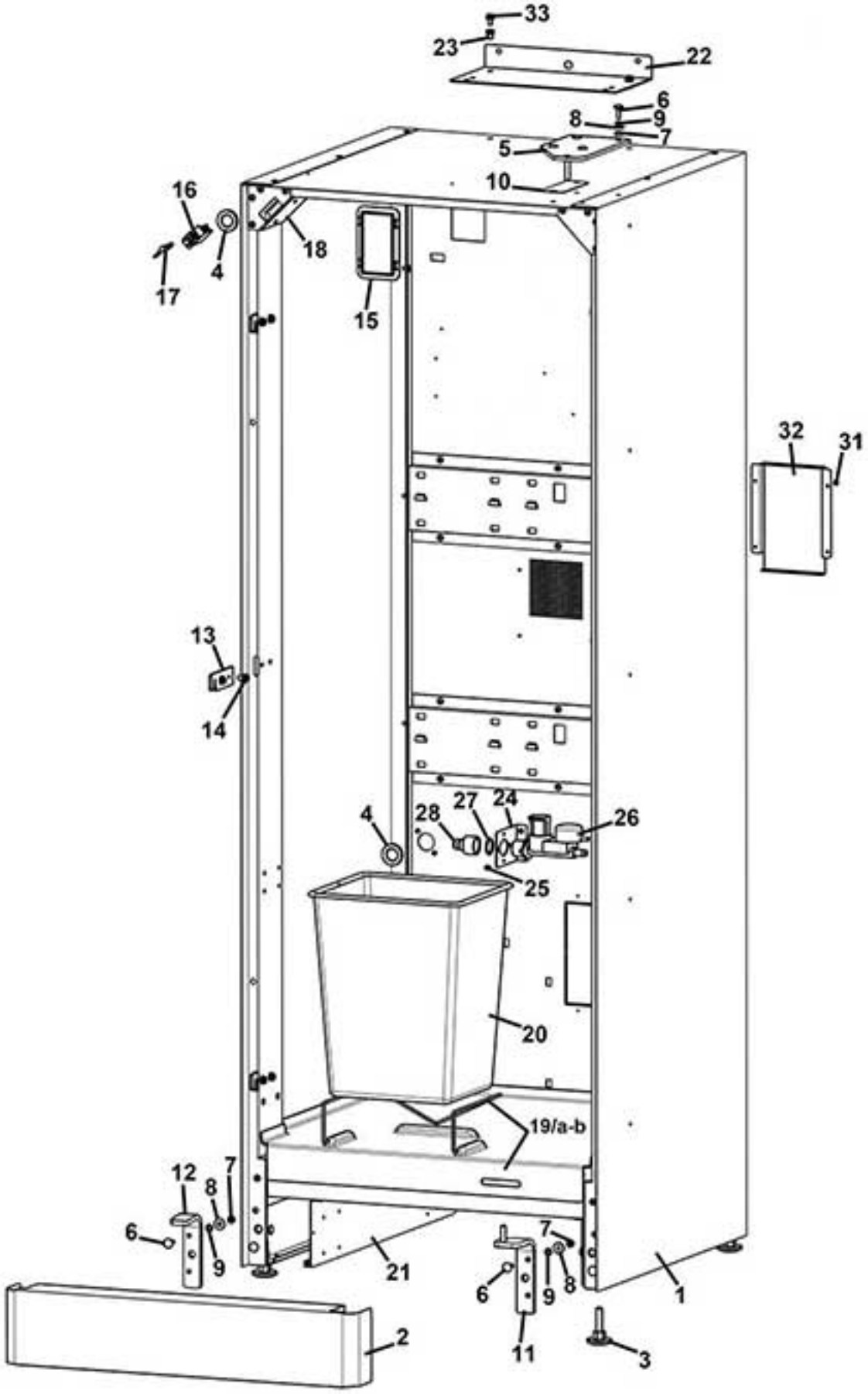

www.rheavendors.com tel: 0039 02 966 551 fax: 0039 02 96 55 086 email: rheavendors@rheavendors.com exclusive property of rheavendors group

cabinet		
Pos.	**Code**	**Description**
1	Z001A113001NAR	CABINET LUCE ZERO 9005+PACK
2	Z001A003029NA	FEET COVER RAL 9005
3	Z0010013208	MACHINE FOOT
4	GUA0010502	ELECTRICAL GROMMET Ø21
5	Z0010030028	UPPER HINGE
6	VIT0005802	SCREW 6X20
7	VIT0004505	NUT M6
8	VIT0003303	WASHER 6,6X18X1,5
9	VIT0003453	SPRING WASHER 6,4
10	Z0010030042	THICKNESS HINGE
11	Z0010030029	LOWER HINGE
12	Z0010030031	MACHINE FOOT
13	Z0010030015	LOCK HOOK
14	VIT0000236	SCREW HEX HEAD M6X11
15	Z0010030054NA	WIRING SUPPLY COVER (BLACK)
16	ELE0002009	BIPOLAR SWITCH 15A 250V
17	Z0270011109CL	§ SERVICE KEY
18	Z0010030075	DOOR SWITCH SUPPORT
19/a	Z0010030049	BIN FRAME
19/b	Z0010032019NA	BOTTOM PROTECTION (BLACK)
20	CON0000201	BIN
21	Z0010030077	CABINET REINFORCEMENT
22	Z0010018071	MACHINE FIXING PLATE
23	VIT0005702	THREADED INSERT
24	Z0010030082	DOUBLE EV SUPPORT
25	VIT0002010	SCREW ST HEAD CAP M3.5X9.5
26	Z0110001109	INLET WATER VALVE 2W 24V DC
27	GUA0000021	OR 130 NBR AL 75 BLACK
28	Z0010019223	H2O INLET CONNECTOR 3/4F-3/8M
31	VIT0002009	SCREW ST HEAD CAP M3.5X6.5
32	Z0012300244NA	COVER BACK
33	Z0010030084	PIN

www.rheavendors.com tel: 0039 02 966 551 fax: 0039 02 96 55 086 email: rheavendors@rheavendors.com exclusive property of rheavendors group

external door

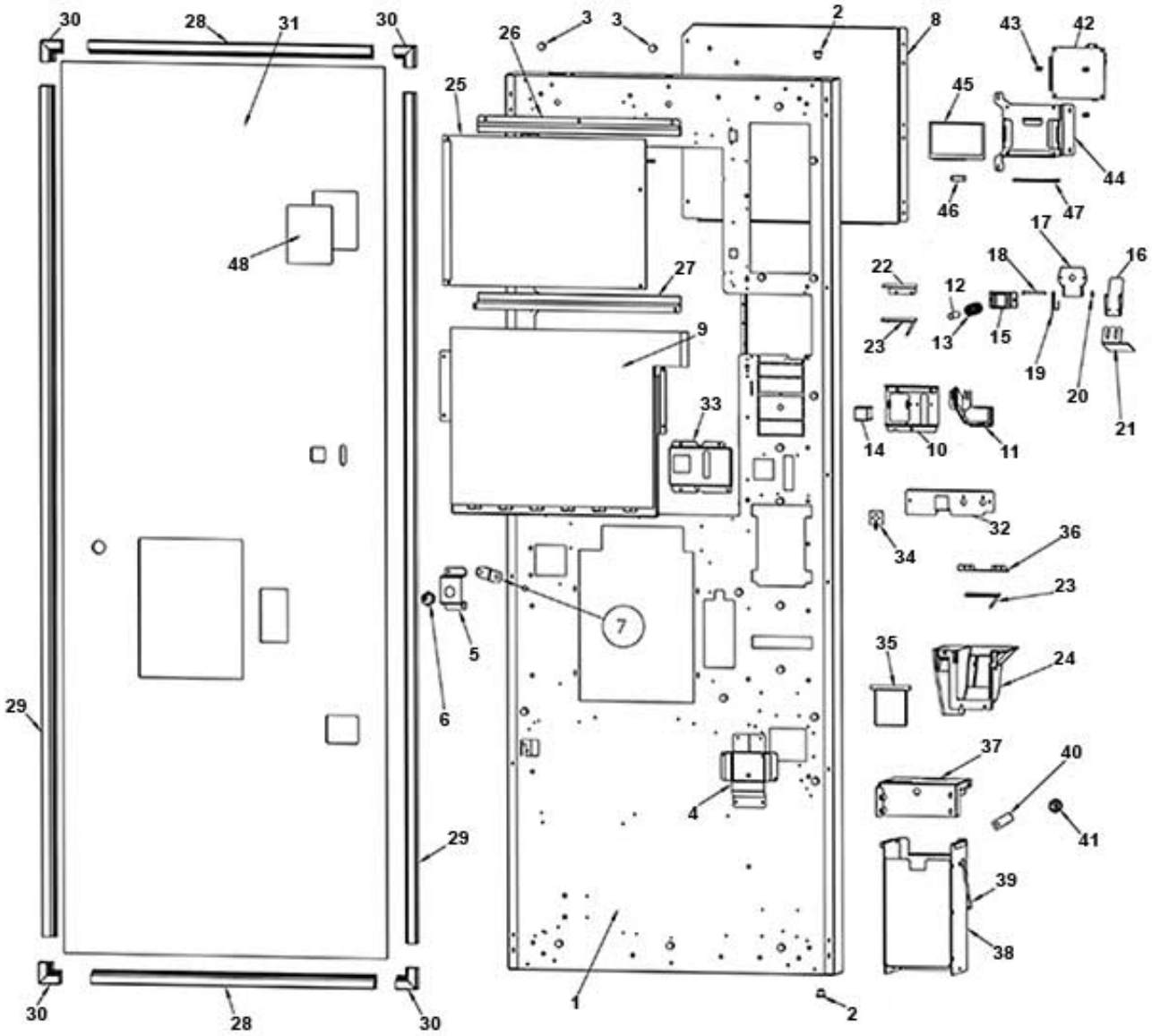

www.rheavendors.com tel: 0039 02 966 551 fax: 0039 02 96 55 086 email: rheavendors@rheavendors.com exclusive property of rheavendors group

external door		
Pos.	**Code**	**Description**
1	Z002A113201NA-04	DOOR RAL 9005
2	Z0020034156	DOOR HINGE BUSH
3	GUA0011030	FOOT PUSH ON BLACK
4	Z002A003026NA	COIN OUTLET PROTECTION
5	Z002A003039NA	LOCK SUPPORT
6/a	SER0000001/1	INOX LOCK C6802
6/b	SER0000023	LOCK RIELDA
7	Z0020054072	LOCK BRACKET
8	Z0020054009	UPPER COVER DOOR
9		See table KEYPAD
10	Z0020054139	PLATE COINS INTRODUCTION
11	Z0020055187	COINS SLIDE
12	Z0020034023	COIN RETURN PIN
13	4050010074	COIN RETURN BUTTON SPRING
14	4050010072XC	COIN RETURN BUTTON CHROMO
15	4050010071NA	COINS RETURN BUTTON SUPP.BLACK
16	Z0020042057	UPPER BRACKET
17	Z0020042064	COIN RETURN BUTTON PLATE
18	Z0020034173	DOOR STOP IN
19	Z0020005013	COIN REJECT BUTTON SPRING
20	VIT0007102	BENZING CLIP
21	Z0020042052	LOWER BRACKET
22	Z002A003051	INSERT COINS LED BOARD SUPPORT
23/a	Z0020055172	LED LIGHTING SYSTEM INCOME COI
23/b	Z002A003052	LED LIGHT. BLU SYST.INCOMECOIN
24	Z0020042014CY	COINS RETURN CHUTE RAL9018
25	Z0020054090	UPPER BACK LIGHT
26	Z002A003123NA	UPPER BACK LIGHT GUIDE 9005
27	Z002A003124NA	LOWER BACK LIGHT GUIDE 9005
28	Z0020054097NA	HORIZONTAL FRAME 9005
29	Z0020054098NA	VERTICAL PROFILE 9005
30	Z0020054095NA	CORNER PROFILE 9005
31		Please be so kind to specify the panel desired
32	Z002A003038	SENSORS AND LEDS SUPPORT
33	Z002A003125	INSERT COIN REINFORCEMENT
34/a	Z002A003033	BLUE LIGHT LOGO BOARD
34/b	Z002A003032	WHITE LIGHT LOGO BOARD
35	Z0020038144XC	COINS RETURN FLAP CHROME
36	Z0020042972	LIGHT CHANGE GIVER SUPPORT
37	Z0020042095	COIN BOX LID
38	Z0030006255CL0	§COIN BOX Include cod.Z0030006258 HOOK
39	Z0030006258	COIN BOX HOOK
40	SER0001005	LOCK PLATE
41	SER0000001/1	INOX LOCK C6802
42	SCH0009801	TFT4,3+CAPACITIVE GPU
43	ELE0062003	BOARD SUPPORT
44	Z002A003024	DISPLAY SUPPORT

www.rheavendors.com tel: 0039 02 966 551 fax: 0039 02 96 55 086 email: rheavendors@rheavendors.com exclusive property of rheavendors group

external door		
45	ELT0030426	LCD TFT 4,3
46	ELT0030937	FLAT FERRITE
47	Z002A003023	FLAT COVER
48		Please be so kind to specify the panel desired

www.rheavendors.com tel: 0039 02 966 551 fax: 0039 02 96 55 086 email: rheavendors@rheavendors.com exclusive property of rheavendors group

internal door

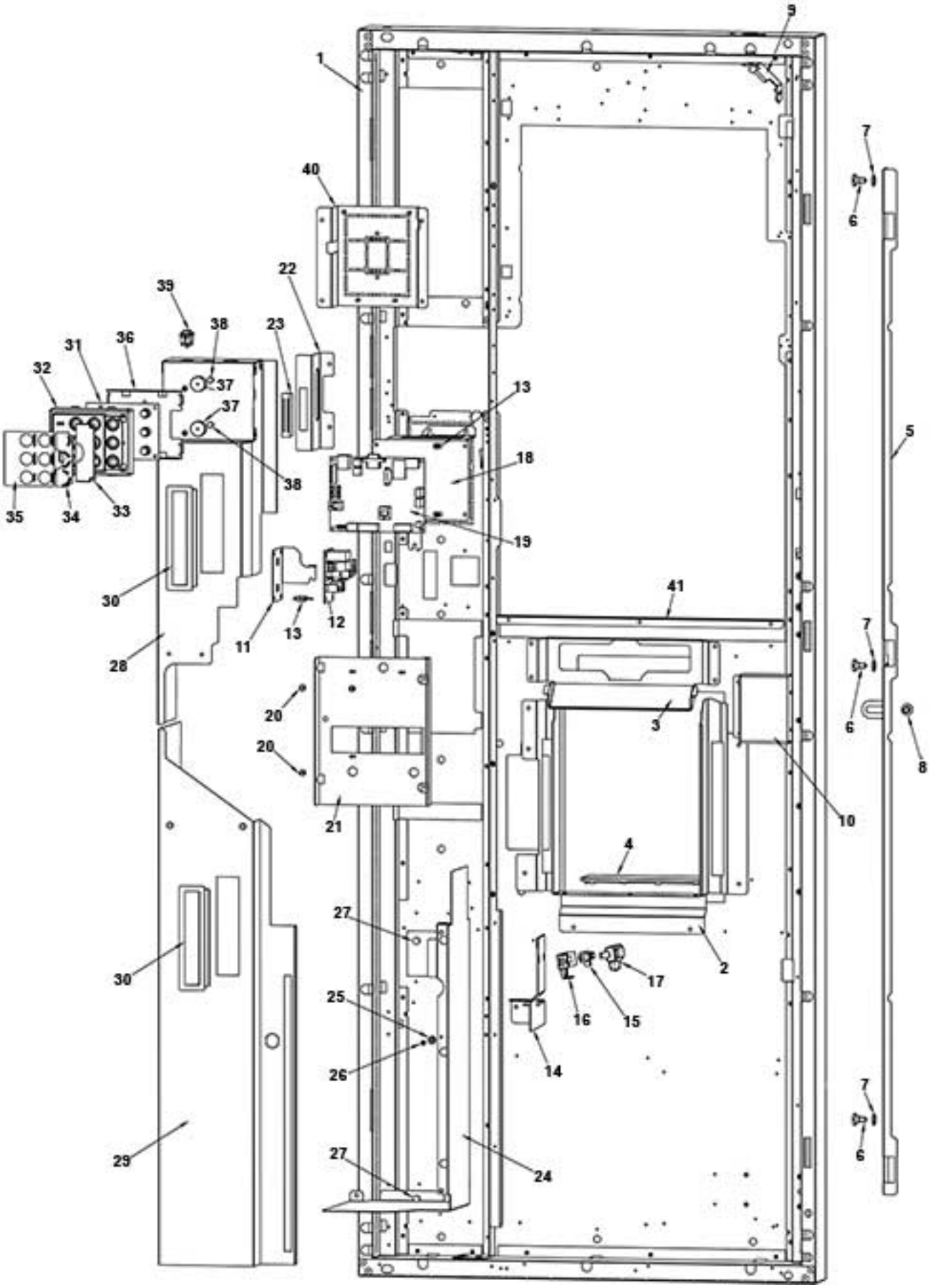

www.rheavendors.com tel: 0039 02 966 551 fax: 0039 02 96 55 086 email: rheavendors@rheavendors.com exclusive property of rheavendors group

internal door		
Pos.	**Code**	**Description**
1	Z002A113201NA-04	DOOR RAL 9005
2	Z002A003134NA	STATION FRAME GLASSES 9005
3	Z002A003035NA	CUP STATION COVER BLACK
4	Z0020054112NA	SHELF CUP STATION
5	Z002A003085	ROD LOCK
6	Z0020029923	FIXING SCREW
7	Z002A021042	BEARING SPACER
8	Z002A003017	LOCK ROD BUSHING
9	Z0020042162	DOOR SWITCH SUPPORT
10	Z002A003073	LOCK PROTECTION
11	Z002A003076	CPU EXPANSION SUPPORT
12	SCH0010460	CPU EXPANSION BOARD
13	ELE0062003	BOARD SUPPORT
14/a	Z0020055067	CUP SENSOR SUPPORT 2T
14/b	Z002A003061	CUP SENSOR SUPPORT 1T
15	ELT0006813	DISTANCE SENSOR
16	Z0020040671	CUP SENSOR LOWER COVER
17	Z0020040672	CUP SENSOR UPPER COVER
18	Z002A003081	CPU SUPPORT
19	SCH0007904	CPU BOARD (2017)
20	4060010126	PAYM SYSTEM FIXING SCREW
21	Z0020054048	CHANGEGIVER SUPPORT
22	Z0020054028	UPPER LATERAL COVER PLATE
23	ELE0000103	MAGNETIC CLICK-LOCK
24	Z0020054104	SUPPORT LOWER COVER DOOR
25	ELT0030760	MAGNET D 10X3
26	VIT0000112	M 3 x 8 T.S.P. SCREW
27	Z0020018061	SELECTION BUTTON PLUG
28	Z002A003084	DOOR UPPER COVER
29	Z0020054047	LOWER DOOR COVER
30	Z0020034823	HANDLE
31	SCH0007182	PROGRAM KEYPAD
32	Z0020042172AH	PROGRAM KEYPAD SUPPORT
33	Z0020042171	KEYBOARD COVER
34	Z0020042164	PROGRAMM LABEL
35	Z0020042165	CLEANING LABEL
36	Z0020042337	WASH KEYBOARD SUPPORT
37	Z0020042338	MAGNET SUPPORT
38	ELT0030560	MAGNET D.8X4
39	ELE0002258	PUSH BUTTON RED
40	Z002A003083	PAYMENT SYSTEM PLATE
41	Z002A003110	BAR DOOR

www.rheavendors.com tel: 0039 02 966 551 fax: 0039 02 96 55 086 email: rheavendors@rheavendors.com exclusive property of rheavendors group

KEYPAD

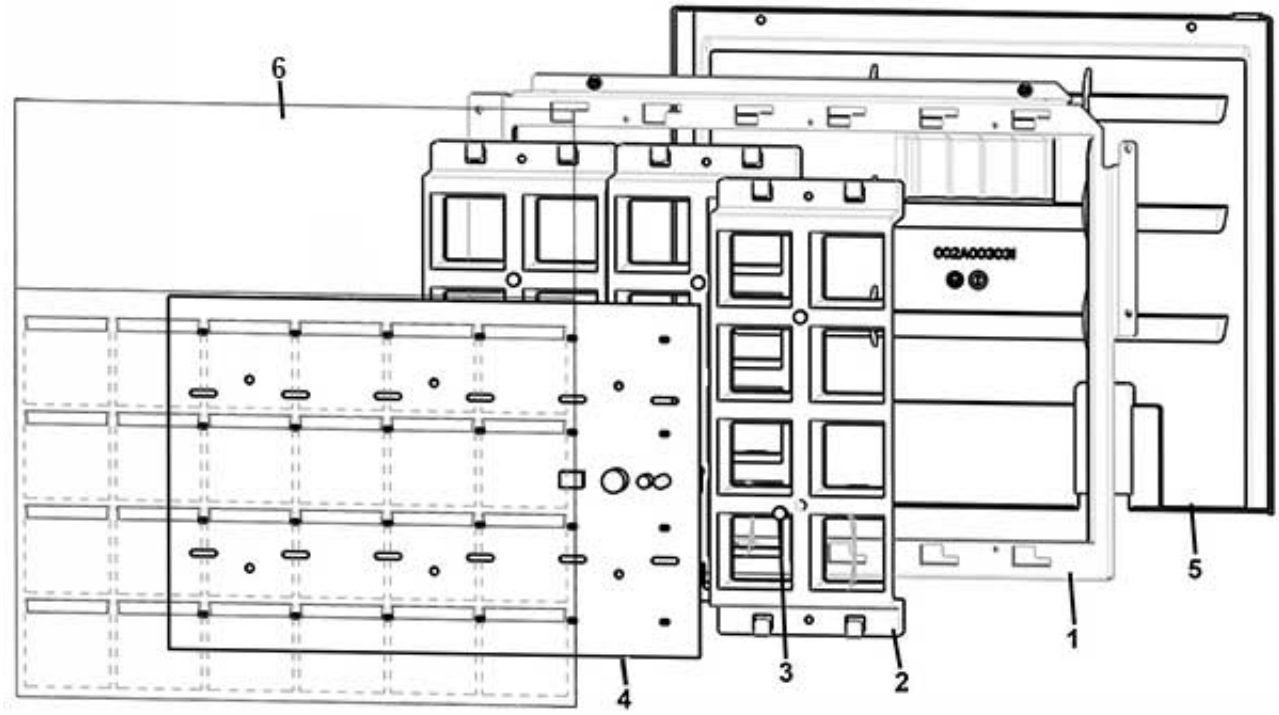

www.rheavendors.com tel: 0039 02 966 551 fax: 0039 02 96 55 086 email: rheavendors@rheavendors.com exclusive property of rheavendors group

KEYPAD		
Pos.	**Code**	**Description**
1	Z0020055031-03	FRONT-LIGHTING SUPPORT
2	Z0020055041	LABELS LIGHT GUIDE
3	GUA0011031	SPACER
4	SCH0010360	LIGHTING KEYPAD BOARD-24B
5	Z002A003031	COVER LIGHTING TAB
6	Z0020054111	24 SELECTIONS LABELS PANEL

www.rheavendors.com tel: 0039 02 966 551 fax: 0039 02 96 55 086 email: rheavendors@rheavendors.com exclusive property of rheavendors group

2 turrets cups station

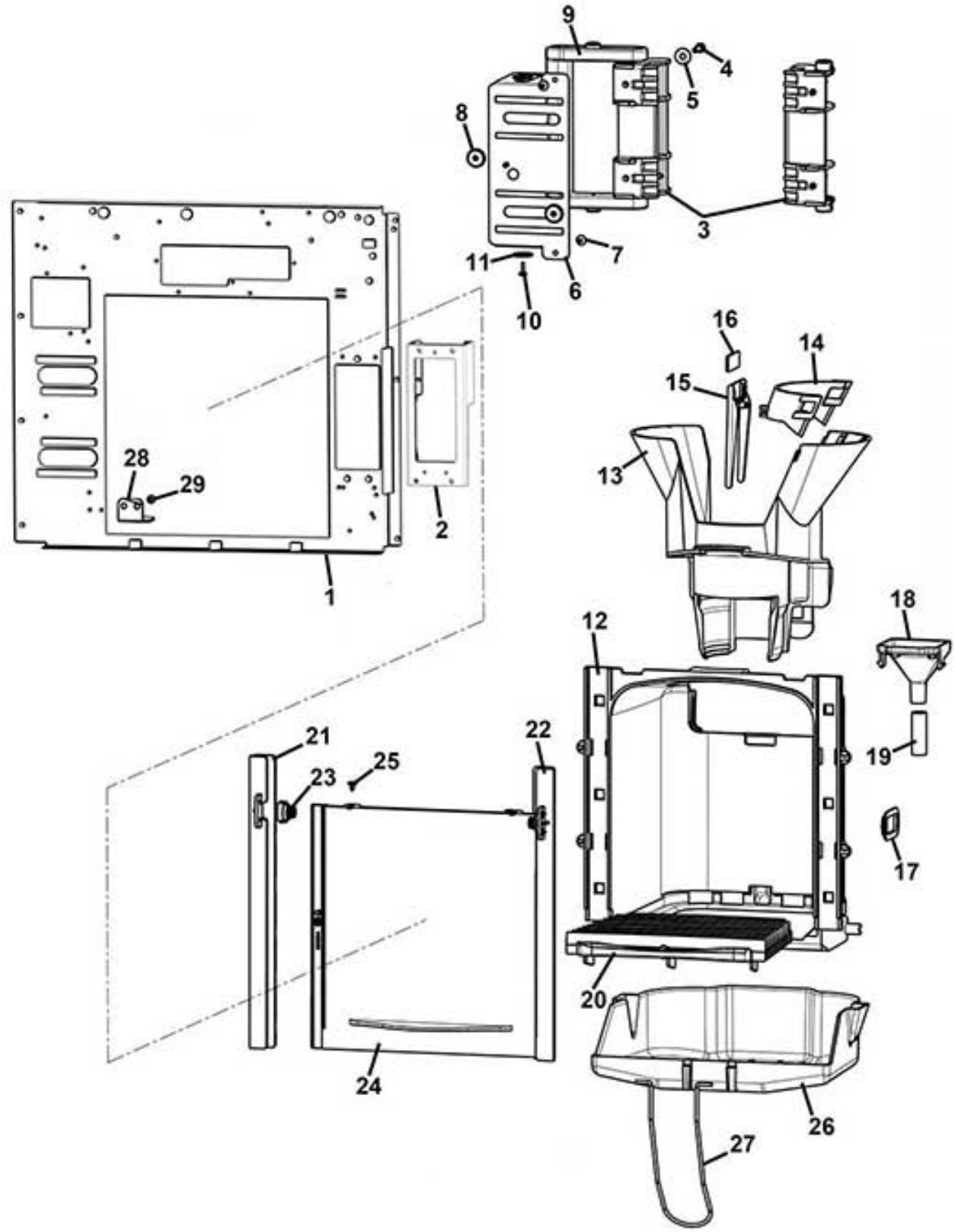

www.rheavendors.com tel: 0039 02 966 551 fax: 0039 02 96 55 086 email: rheavendors@rheavendors.com exclusive property of rheavendors group

2 turrets cups station		
Pos.	**Code**	**Description**
1	Z002A003037	SUPPORT CUP STATION
2	Z0020054031	SIDE CUP STATION SUPP.FOR LIDS
3	Z0400009007CY	CUP STATION PLATE
4	VIT0001110	SCREW HEX HEAD M5X20
5	VIT0003302	WASHER 5,5X15X1,6
6	Z0400009016	HANDLE SUPPORT
7	VIT0002401	SCREW ST HEAD CAP M3.5X9.5
8	Z0400009009	CUP STATION SPACER
9	Z0400009008IC	CUP STATION HANDLE RAL2011
10	VIT0002469	SCREW HEAD TAP M3.5X10
11	VIT0003305	WASHER 5,5X20X2
12	Z0400009001CW	CUPS STATION FRAME RAL7043
13	Z0400009002CW	DOUBLE CUP CHUTE RAL7043
14	Z0400009026CW	DOUBLE CHUTE ADAPTER RAL7043
15	Z0400009027CW	CUP STOPPER RAL7043
16	Z0020042219	CUP STOPPER WEIGHT
17	Z0400009018	SENSOR PLUG
18	Z0400009015CW	DROPS CHUTE RAL7043
19	TSIL10/14T	SILICON HOSE 10X14
20	Z0400009019CW	CUP STATION GRID (RAL7043)
21	Z0400009851CWR	§ DOOR GUIDE LH+RH RAL 7043 Pos.21+22
22	Z0400009851CWR	§ DOOR GUIDE LH+RH RAL 7043 Pos.21+22
23	Z0400009096	FLAP RETARDER
24	Z0400009006	FLAP
25	GUA0011017	MACHINE FOOT D.7,9
26	Z0400009011CW	LIQUID CHUTE RAL7043
27	Z0150001053	DRIP TRAY SPRING
28	Z0400009025	SPACER PLATE
29	VIT0002009	SCREW ST HEAD CAP M3.5X6.5

www.rheavendors.com tel: 0039 02 966 551 fax: 0039 02 96 55 086 email: rheavendors@rheavendors.com exclusive property of rheavendors group

LIDS DISPENSER

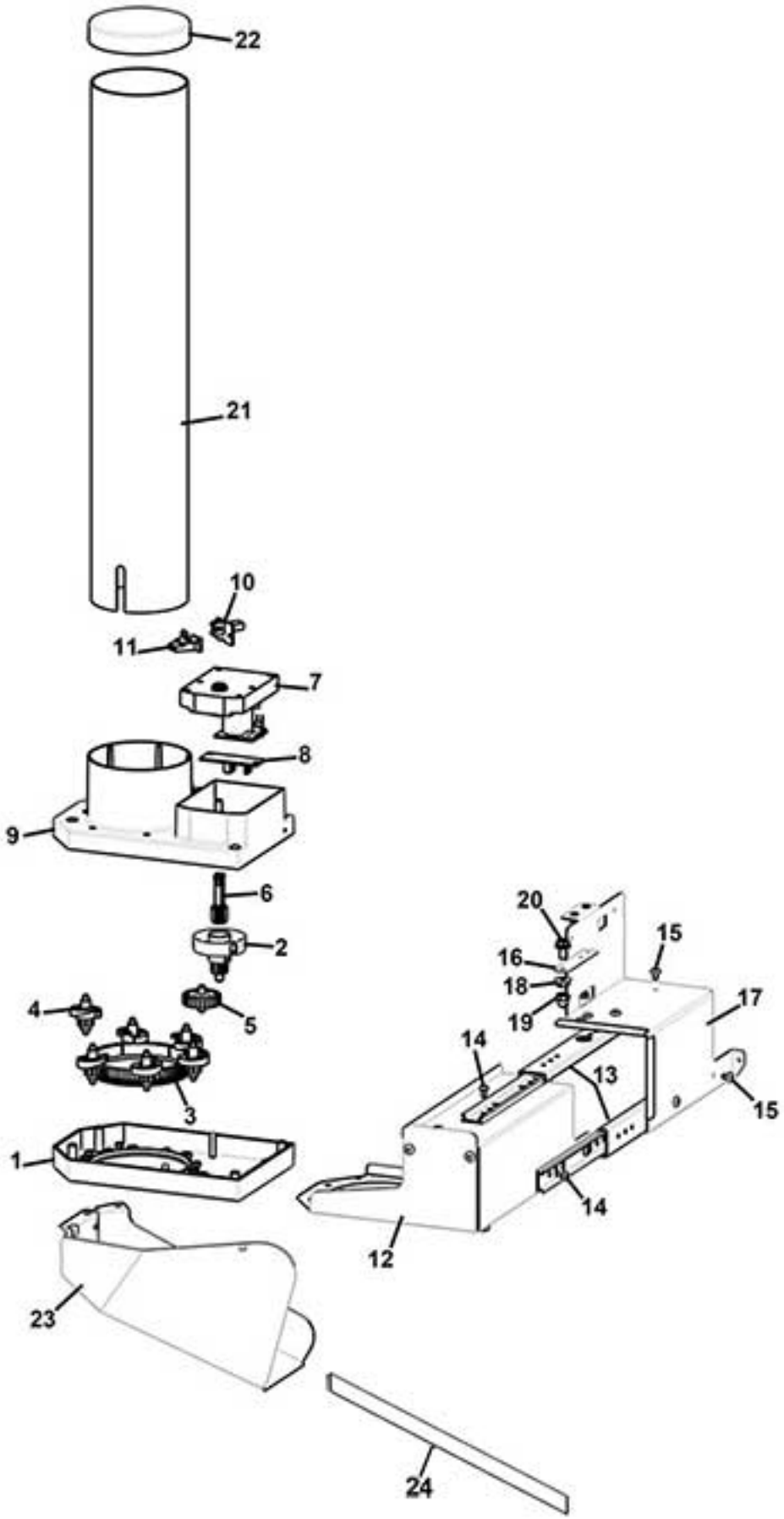

www.rheavendors.com tel: 0039 02 966 551 fax: 0039 02 96 55 086 email: rheavendors@rheavendors.com exclusive property of rheavendors group

LIDS DISPENSER		
Pos.	**Code**	**Description**
1	Z0190006602CY	LOWER CUP DROP MECH. RAL9018
2	Z0190006511NA	CUPS TURRET SPINDLE BLACK
3	Z0190006604CY	RING NUT RAL9018
4	Z0190006603CY	SPLIT UP RAL9018
5	Z0190006528	Z26 WHEEL WHITE
6	Z0190006518	TOOTHED SHAFT Z18 WHITE
7	Z0090002114R	§ GEARBOX MOTOR 11RPM 24V DC
8	SCH0007000	SPLIT UP SENSOR
9	Z0190006601CY	UPPER CUP DROP MECH. RAL9018
10	SCH0008000	CUPS SENSOR BOARD
11	Z0190006008	CUP SENSOR SUPPORT
12	Z0020055119	LIDS DISPENSER SUPPORT
13	VIT0010201	RAIL
14	VIT0000003	SCREW HEAD TAP CAP M3X8
15	VIT0000021	SCREW HEAD TAP CAP M4X6
16	Z0020051229	STOP SPRING
17	Z002A003077-01	LEFT TURRET SUPPORT
18	VIT0004830	NUT M6
19	VIT0004903	BLACK NUT M6 WITH CAPSULE
20	VIT0000236	SCREW HEX HEAD M6X11
21/a	Z0190006613	LIDS TUBE D.90/87MM L.500MM
21/b	Z0190006628	TUBE LIDS D90/87MM L.720MM
22	Z0190006621NA	CUP TURRET LID BLACK
23	Z0020055118	LID CHUTE
24	Z002A021211	STICKER SLIDE COVERS

www.rheavendors.com tel: 0039 02 966 551 fax: 0039 02 96 55 086 email: rheavendors@rheavendors.com exclusive property of rheavendors group

LIDS ACCEPT/RETURN

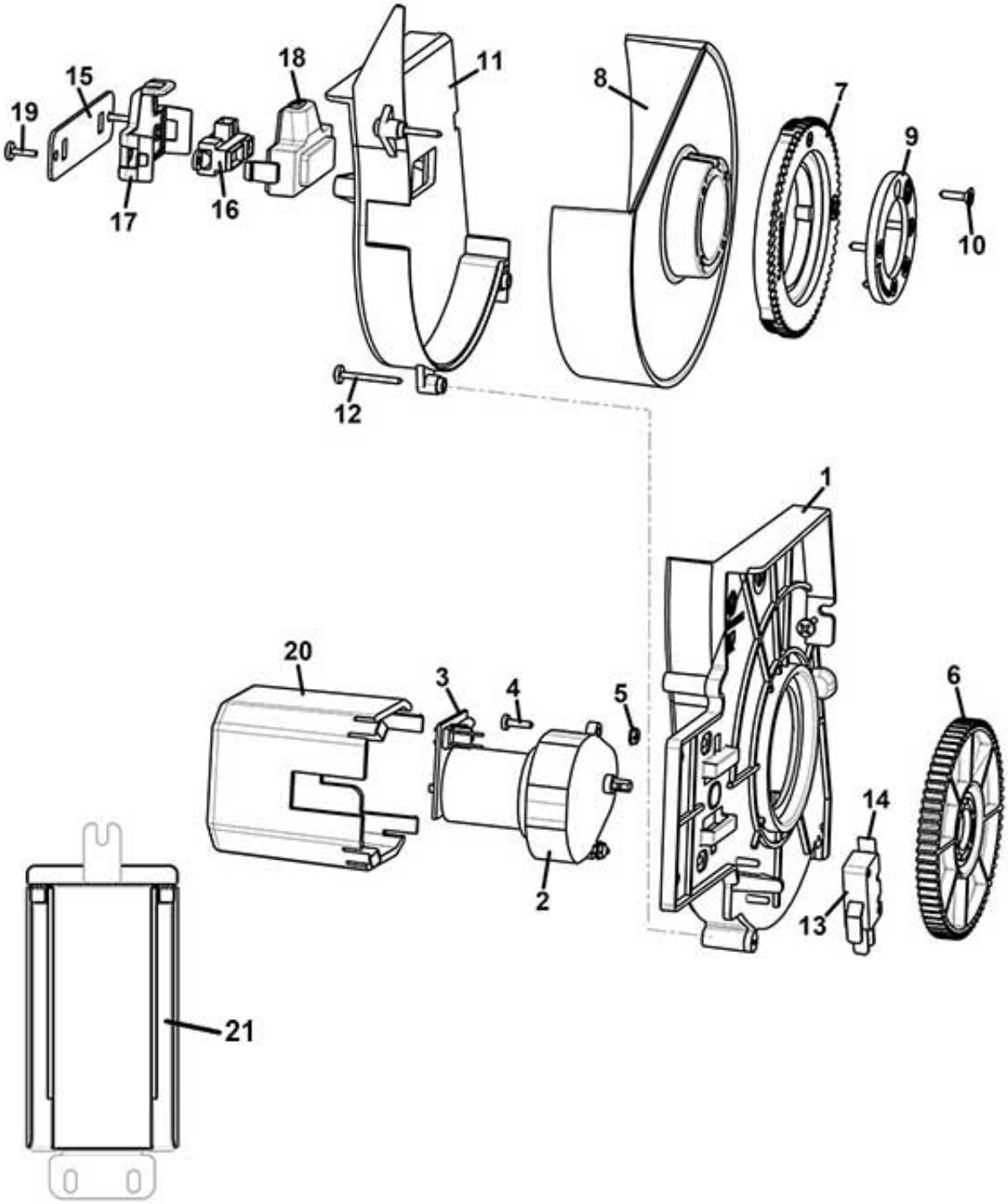

www.rheavendors.com tel: 0039 02 966 551 fax: 0039 02 96 55 086 email: rheavendors@rheavendors.com exclusive property of rheavendors group

LIDS ACCEPT/RETURN		
Pos.	**Code**	**Description**
1	Z0400009055CY	RIGHT CARTER RAL 9018
2	Z0090002197	GEAR MOTOR 11RPM 24V DC
3	SCH0003740	MOTOR FILTER
4	VIT0000004	SCREW HEAD TAP CAP M3X10
5	VIT0004701	NUT M3
6	Z0400009071CY	DRIVING WHEEL (RAL 9018)
7	Z0400009072CY	DRIVEN WHEEL (RAL 9018)
8	Z0400009057CI	LID SUPPORT RAL 7042
9	Z0400009066CY	FRICTION WHEEL FLANGE RAL 9018
10	VIT0002101	SCREW COUNT FLAT HEAD M3.5X13
11	Z0400009056CY	LEFT CARTER RAL 9018
12	VIT0002456	SCREW HEAD TAP M3.5X25
13	ELE0001522	MICROSWITCH
14	ELE0001906	MICROSWITCH LEVER
15	Z0400009065	SENSOR PLATE SUPPORT
16	ELT0006813	DISTANCE SENSOR
17	Z0020040671	CUP SENSOR LOWER COVER
18	Z0020040672	CUP SENSOR UPPER COVER
19	VIT0002469	SCREW HEAD TAP M3.5X10
20	Z0400009064CG	MOTOR COVER RAL7035
21	Z0020054069NA	LID DISPENSER FRAME BLACK

www.rheavendors.com tel: 0039 02 966 551 fax: 0039 02 96 55 086 email: rheavendors@rheavendors.com exclusive property of rheavendors group

2 TURRETS DB SUPPORT

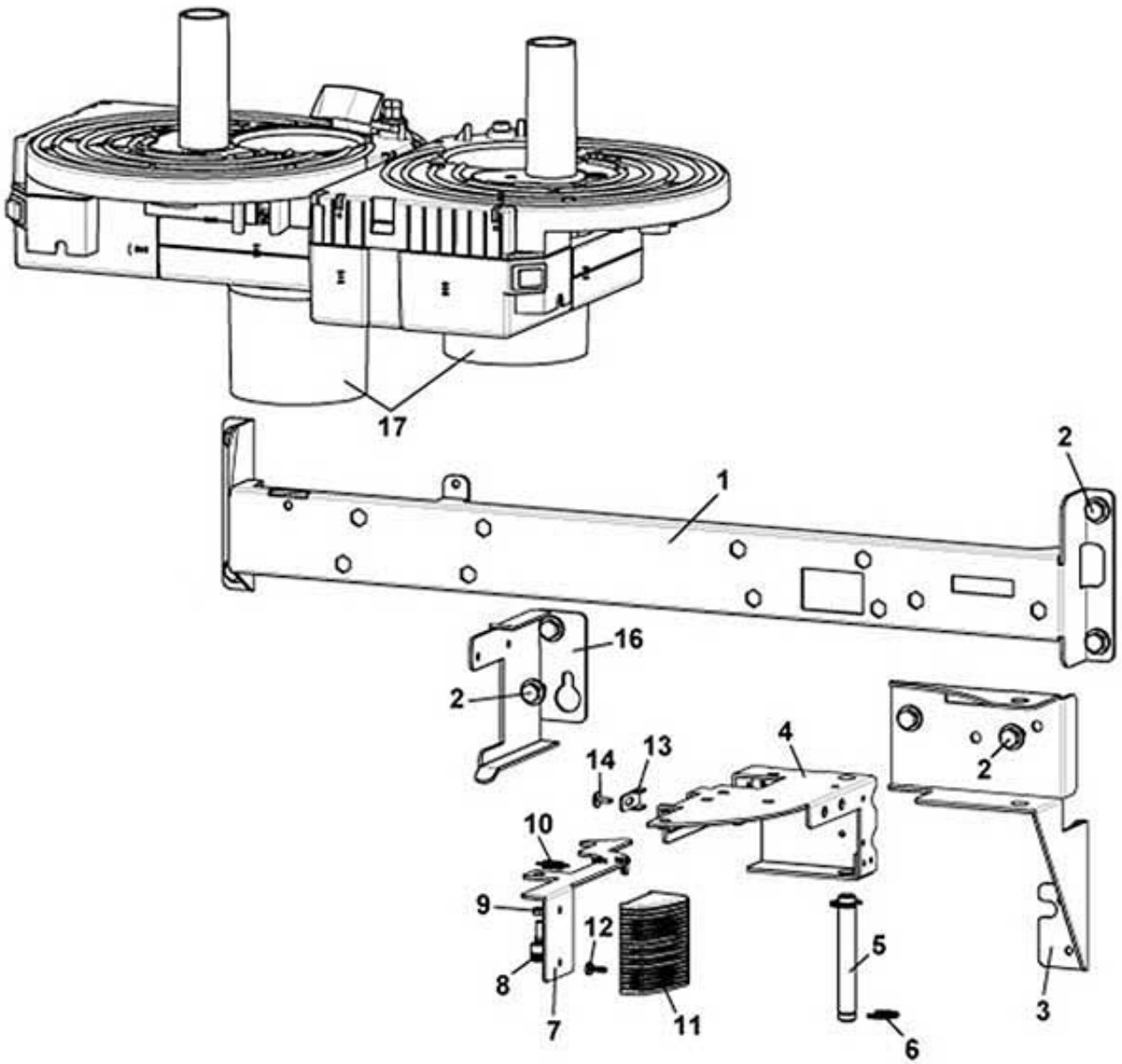

www.rheavendors.com tel: 0039 02 966 551 fax: 0039 02 96 55 086 email: rheavendors@rheavendors.com exclusive property of rheavendors group

2 TURRETS DB SUPPORT		
Pos.	**Code**	**Description**
1	Z002A003075CK	D.B. SUPPORT
2	VIT0000236	SCREW HEX HEAD M6X11
3	Z0020054030	CUP TURRET SUPPORT
4	Z0020042071	TURRET SUPPORT
5	Z0020042078	HINGE PIN
6	VIT0006518	RING 9
7	Z0020042077	TURRET HOOK
8	Z0020031343	PIN
9	VIT0004503	NUT M4
10	Z0450003010	SPRING
11	Z0020042168IC	HANDLE RAL2011
12	VIT0002469	SCREW HEAD TAP M3.5X10
13	Z0020042076	REGULATION LEVER
14	VIT0002401	SCREW ST HEAD CAP M3.5X9.5
16	Z0020042067	TURRET RIGHT SUPPORT
17		See table cups loader

www.rheavendors.com tel: 0039 02 966 551 fax: 0039 02 96 55 086 email: rheavendors@rheavendors.com exclusive property of rheavendors group

cups loader

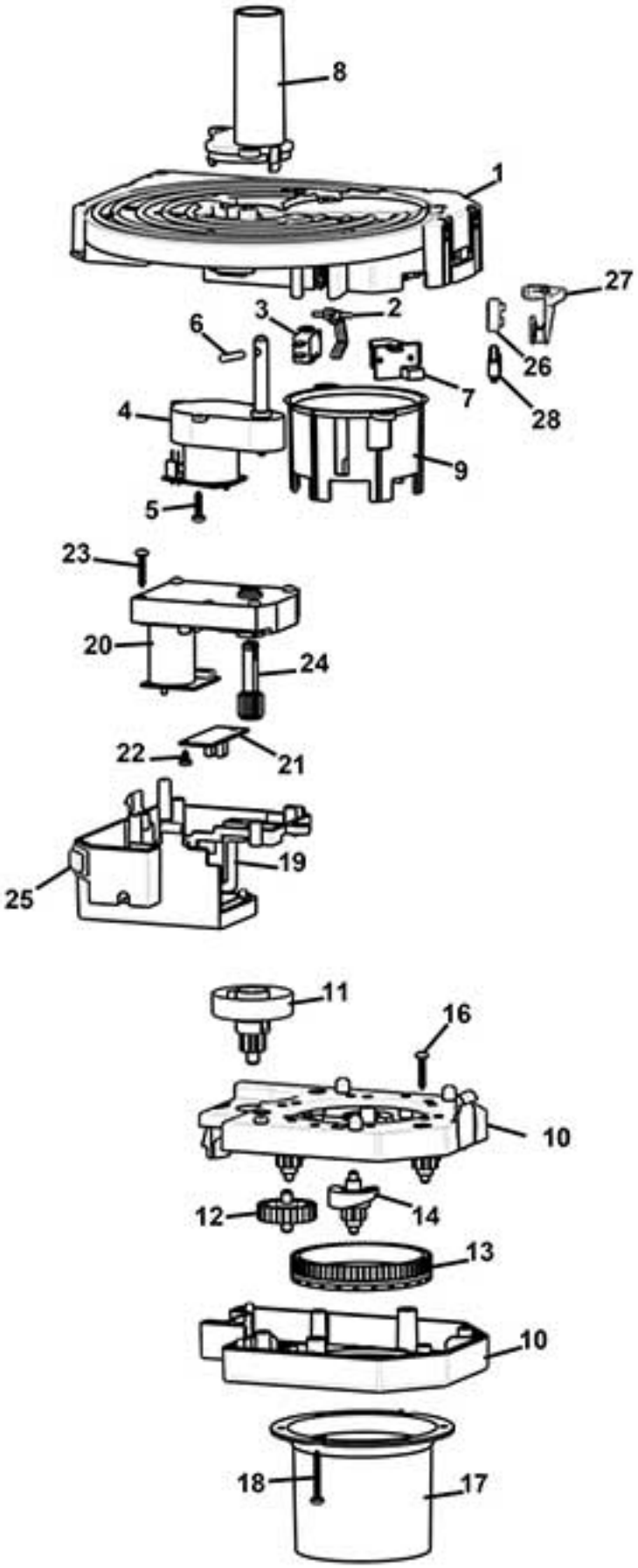

www.rheavendors.com tel: 0039 02 966 551 fax: 0039 02 96 55 086 email: rheavendors@rheavendors.com exclusive property of rheavendors group

cups loader		
Pos.	**Code**	**Description**
1	Z0190006581CI	TURRET SUPPORT RAL 7042
2/a	Z0190006543-01	MICROSWITCH LEVER WHITE
2/b	Z0190006556KA	MICROSWITCH LEVER RAL3020
3	ELE0001530	MICROSWITCH 3A 125-250VA
4	Z0090002043R	§ MOTOR GEAR+BOARD
5	VIT0002469	SCREW HEAD TAP M3.5X10
6	VIT0005223	PIN 4X18 DIN 1475
7	SCH0007021	MOTOR FILTER
8	Z0190006537CY	TURRET CUP CONNEC. 4C. RAL9018
9	Z0190006538CF	CUPS REDUCER D.70 RAL7016
10	Z0190006521CYR	LOWER/UPPER CUP DROP MECH.
11	Z0190006511NA	CUPS TURRET SPINDLE BLACK
12	Z0190006528	Z26 WHEEL WHITE
13/a	Z0190006523	TOOTHED RING NUT D.70/73
13/b	Z0190006507	TOOTHED RING NUT D.78/80 WHITE
14/a	Z0190006506IC	SPLIT UP D.70/78-ORANGE PL
14/b	Z0190006551GJ	SPLIT UP D.70/78-YELLOW PP
14/c	Z0190006509PL	SPLIT UP D.80 MULTISTEP BLU
15	Z0190006521CYR	LOWER/UPPER CUP DROP MECH.
16	VIT0002456	SCREW HEAD TAP M3.5X25
17	Z0190006514CY	CUPS CHUTE 70/73 RAL9018
18	VIT0002469	SCREW HEAD TAP M3.5X10
19	Z0190006522CY	MOTOR SUPPORT RAL9018
20	Z0090002114R	§ GEARBOX MOTOR 11RPM 24V DC
21	SCH0007000	SPLIT UP SENSOR
22	VIT0002002	SCREW ST HEAD CAP M3.5X6.5
23	VIT0002025	SCREW ST HEAD CAP M3.5X22
24	Z0190006518	TOOTHED SHAFT Z18 WHITE
25	ELE0002258CL	§ PUSH BUTTON RED
26	Z019A111001CI	MICRO SWITCH ACT. 0° DEGREES
27	Z019A111002CI	MICRO SUPPORT
28	CBLLZ00064	WIRED COLUMN MICROSWITCHG
100	Z0190006500CL19	§ CUP DISP. 4C D.70P PD DS From pos. 1 to pos.28 (excluded pos.2/b,13/b,14/b and 14/c)
101	Z0190006500CL21	§ CUP DISP. 4C D.70C PD DS From pos. 1 to pos.28 (excluded pos.2/b,13/b,14/a and 14/c)
102	Z0190006500CL20	§ CUP DISP.4C D.80C PD DS BLUE From pos. 1 to pos.28 (excluded pos.2/a,9, 13/a,14/a ,14/b and 17)
103	Z0190006534CL13R	§TURRET SUPP. 4C D.70/73 PD DS From pos. 1 to pos.8-26-27-28 (excluded pos.2/b)
104	Z0190006534CL14R	§ TURRET SUPP. 4C D.80 PD DS From pos. 1 to pos.8 -26-7-28 (excluded pos.2/a)
105	Z0190006521CLR	§ CUP DROP MECH. D.70 PL From pos. 10 to pos.18 (excluded pos.13/b, 14/b and 14/c)
106	Z0190006521CL12R	§ CUP DROP MECH. D.80-PP BLUE From pos. 10 to pos.18 (excluded pos.13/a, 14/a and 14/b)
107	Z0190006521CL0R	§ CUP DROP MECH. D.70 PP From pos. 10 to pos.18 (excluded pos.13/c, 14/a and 14/c)
108	Z0190006522CL1R	§ GEARS DB TURRET SUPPORT From pos. 19 to pos. 25

www.rheavendors.com tel: 0039 02 966 551 fax: 0039 02 96 55 086 email: rheavendors@rheavendors.com exclusive property of rheavendors group

4 columns cups turret

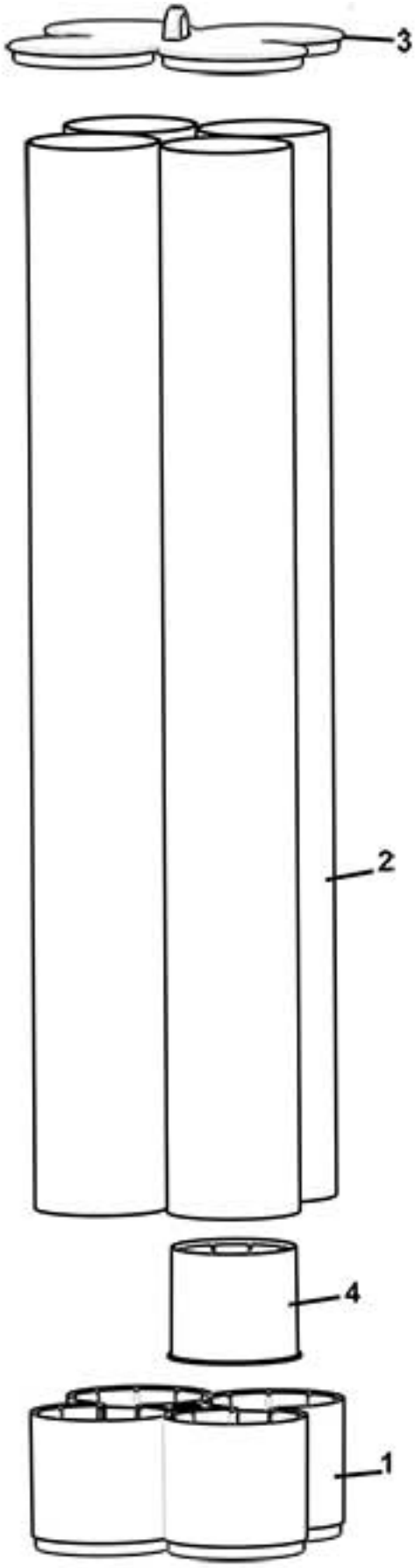

www.rheavendors.com tel: 0039 02 966 551 fax: 0039 02 96 55 086 email: rheavendors@rheavendors.com exclusive property of rheavendors group

4 columns cups turret		
Pos.	**Code**	**Description**
1/a	Z018A111012CY	CUP TURRET SPINDLE 4C D80 9018
1/b	Z018A111013CY	CUP TURRET SPINDLE 4C D70 9018
2/a	Z0180013126	CUP HOLDER 2T D.84/81MM L550MM
2/b	Z0180013127	CUP HOLDER 2T D.87/84MM L550MM
3	Z0180013313CY	TURRET COVER 4C
4	Z0180013113	D.70 COLUMN REDUCTION (WHITE)
100	Z0180013100CL12R	§ TURRET 4C D.70/73 PD DS
101	Z0180013100CL13R	§ TURRET 4C D.80 PD DS

www.rheavendors.com tel: 0039 02 966 551 fax: 0039 02 96 55 086 email: rheavendors@rheavendors.com exclusive property of rheavendors group

stirrer dispenser (2 TURRETS)

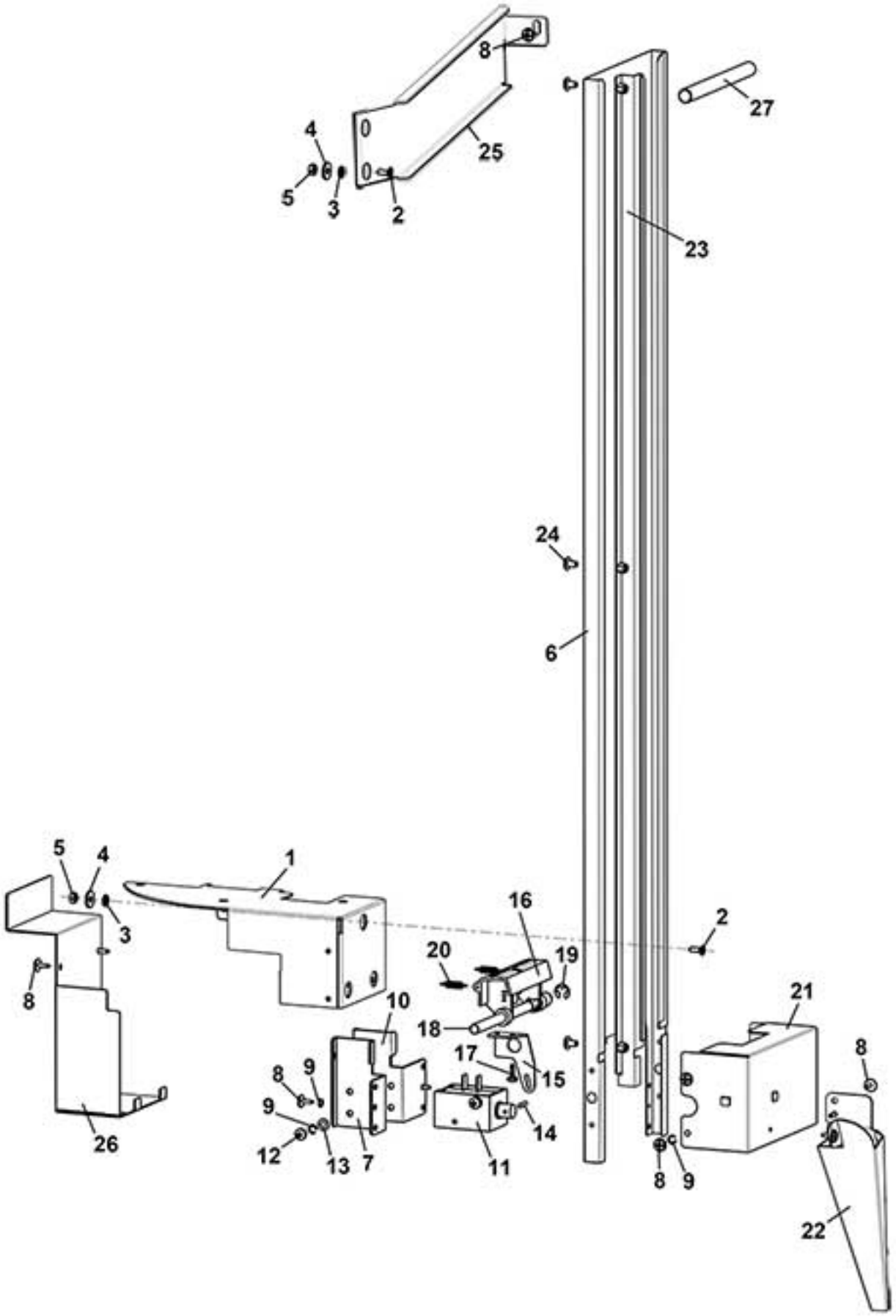

www.rheavendors.com tel: 0039 02 966 551 fax: 0039 02 96 55 086 email: rheavendors@rheavendors.com exclusive property of rheavendors group

stirrer dispenser (2 TURRETS)		
Pos.	**Code**	**Description**
1	Z002A003072	STIRRERS SUPPORT
2	VIT0000107	SCREW COUNT FLAT HEAD M4X10
3	VIT0003103	SPRING WASHER 4,3
4	VIT0003302	WASHER 5,5X15X1,6
5	VIT0004815	NUT M4
6	Z0450011042	STIRRER CONTAINER
7	Z0450009139	ELECTROMAGNET RIGHT SUPPORT
8	VIT0002401	SCREW ST HEAD CAP M3.5X9.5
9	VIT0003405	SPRING WASHER 4,3
10	Z0450009140	ELECTROMAGNET LEFT SUPPORT
11	ELE0000055	ELECTROMAGNET 5% 24V DC
12	VIT0000021	SCREW HEAD TAP CAP M4X6
13	VIT0003003	WASHER 4,3X8X0,8
14	VIT0005211	DOWEL PIN 2.5X12
15	Z0450009141	ELECTROMAGNET CONNECTING ROD
16	Z0450002003	STIRRER EJECTOR
17	VIT0002469	SCREW HEAD TAP M3.5X10
18	Z0450011066	STIRRER EJECTOR PIN
19	VIT0006504	RING 5
20	Z0450003010	SPRING
21	Z0450011045	STIRRER FUNNEL 89-104-115 2T
22	Z0450011017	STIRRER CHUTE 2T
23	Z0450011043	STIRRER MOBILE GUIDE
24	VIT0000030	SCREW HEAD TAP CAP M4X7
25	Z002A003086	STIRRERS. DISP. UPPER SUPPORT
26	Z0020042169	ELECTROMAGNET COVER
27/a	Z0450003033	STIRRER WEIGHT 104MM
27/b	Z0450011121	STIRRER WEIGHT 115MM
27/c	4001012030	STIRRER WEIGHT 89MM

www.rheavendors.com tel: 0039 02 966 551 fax: 0039 02 96 55 086 email: rheavendors@rheavendors.com exclusive property of rheavendors group

solubles dispenser H/5

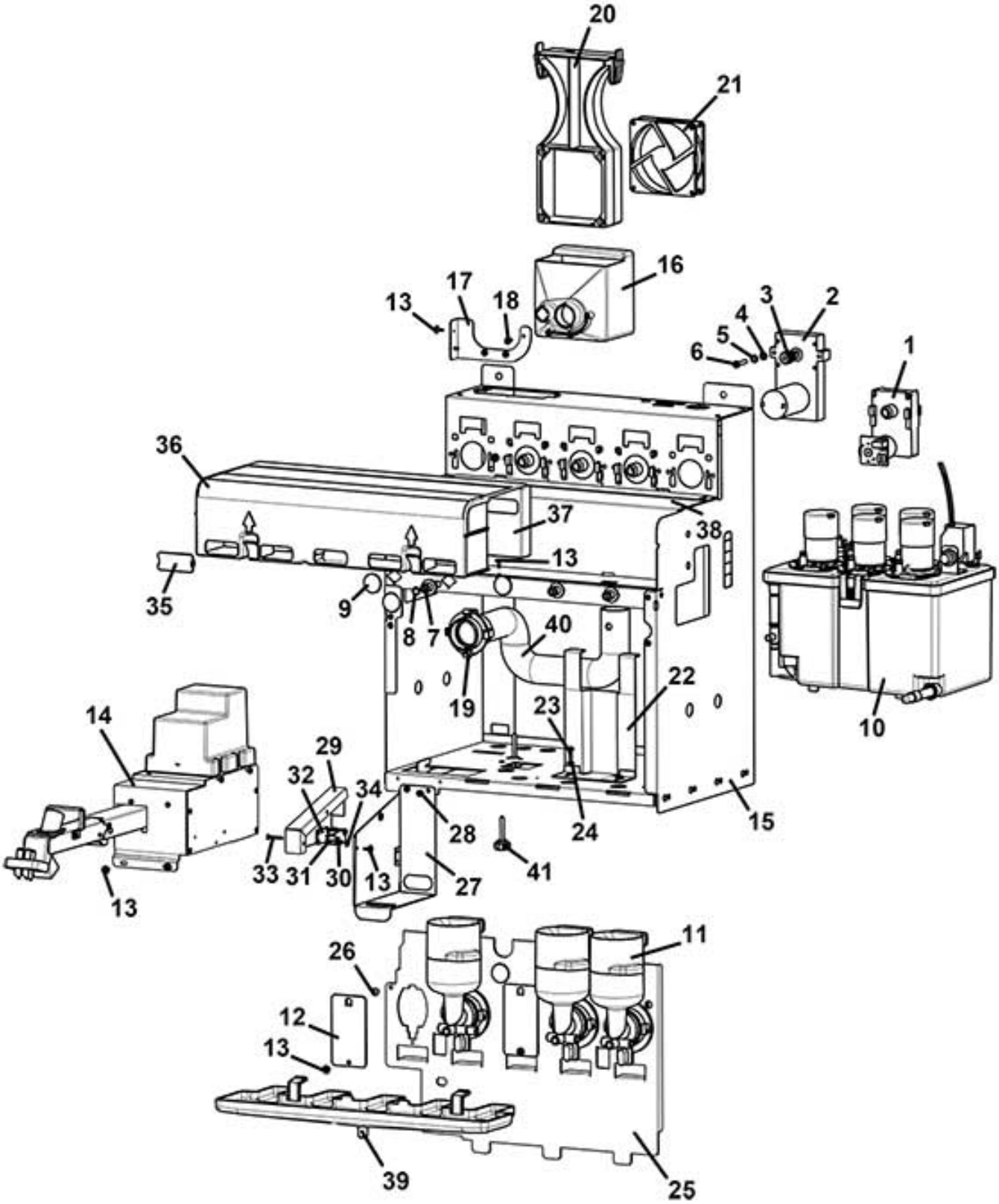

www.rheavendors.com tel: 0039 02 966 551 fax: 0039 02 96 55 086 email: rheavendors@rheavendors.com exclusive property of rheavendors group

solubles dispenser H/5		
Pos.	**Code**	**Description**
1	Z0090002113R	§ GEARBOX MOTOR 24V DC+FILTER
2/a	Z0090002082	MOTOR 24 DC 55 RPM
2/b	Z0090002081	MOTOR 24 DC 85 RPM
3	Z0230012010	PINION
4	Z0090002079	SPACER
5	VIT0003104	SPRING WASHER 5,3
6	VIT0000015	SCREW HEAD TAP CAP M4X25
7/a	Z0080100043	MIXER CONNECTOR BLACK
7/b	Z0080100043-02PL	MIXER CONNECTOR-SHORT BLUE
7/c	Z0080100043-02MD	MIXER CONNECTOR-SHORT GREEN
7/d	Z0080100043-02IC	MIXER CONNECTOR-SHORT ORANGE
8	GUA0000089	OR 2031 RED SILICONE A70
9	Z0080100035NA	CONNECTOR PLUG BLACK
10		See table boiler
11		
12	Z0010020028NA	MIXER PLUG BLACK
13	VIT0002401	SCREW ST HEAD CAP M3.5X9.5
14		See table distribution pipes movement
15	Z0070020001-09	HOUSING H5
16	Z0070020017CY	EXTRACTOR FUNNEL RAL9018
17	Z0070020030	FAN PLATE
18	VIT0002469	SCREW HEAD TAP M3.5X10
19	Z0070020019CY	EXTRATOR TUBE SUPPORT
20	Z0070020024IC	FAN SUPPORT RAL2011
21	ELE0000468R	§ FAN 24V DC-HIGH SPEED-D.92
22	Z0070021013	BOILER BRACKET
23	VIT0001005	SCREW HEAD TAP CAP M4X12
24	VIT0003109	SPRING WASHER 4,3
25	Z0070020011	MIXER SUPPORT
26	VIT0000012	SCREW HEAD TAP CAP M4X10
27	Z0070020231	PIPE SUPPORT GUIDE
28	VIT0002009	SCREW ST HEAD CAP M3.5X6.5
29	Z0070020037	SWITCH COVER
30	ELE0001528	MICROSWITCH
31	NL201106265	MICRO LEVER
32	4600010014	SPACER
33	VIT0000006	SCREW HEAD TAP CAP M3X16
34	VIT0004701	NUT M3
35	Z0070014776	TRAP PLUG
36	Z0070020012CY	EXTRACTOR DRAWER RAL9018
37	Z0070020013CY	EXTRACTOR COVER RAL9018
38	Z0070020004	TRAP SUPPORT (BLACK)
39	Z0070020035CY	POWDER TRAY RAL9018
40	TEOL000002	EXTRACTOR TUBE D.30
41	VIT0009164	HANDLE

www.rheavendors.com tel: 0039 02 966 551 fax: 0039 02 96 55 086 email: rheavendors@rheavendors.com exclusive property of rheavendors group

solubles dispenser H/6-2 GRINDERS

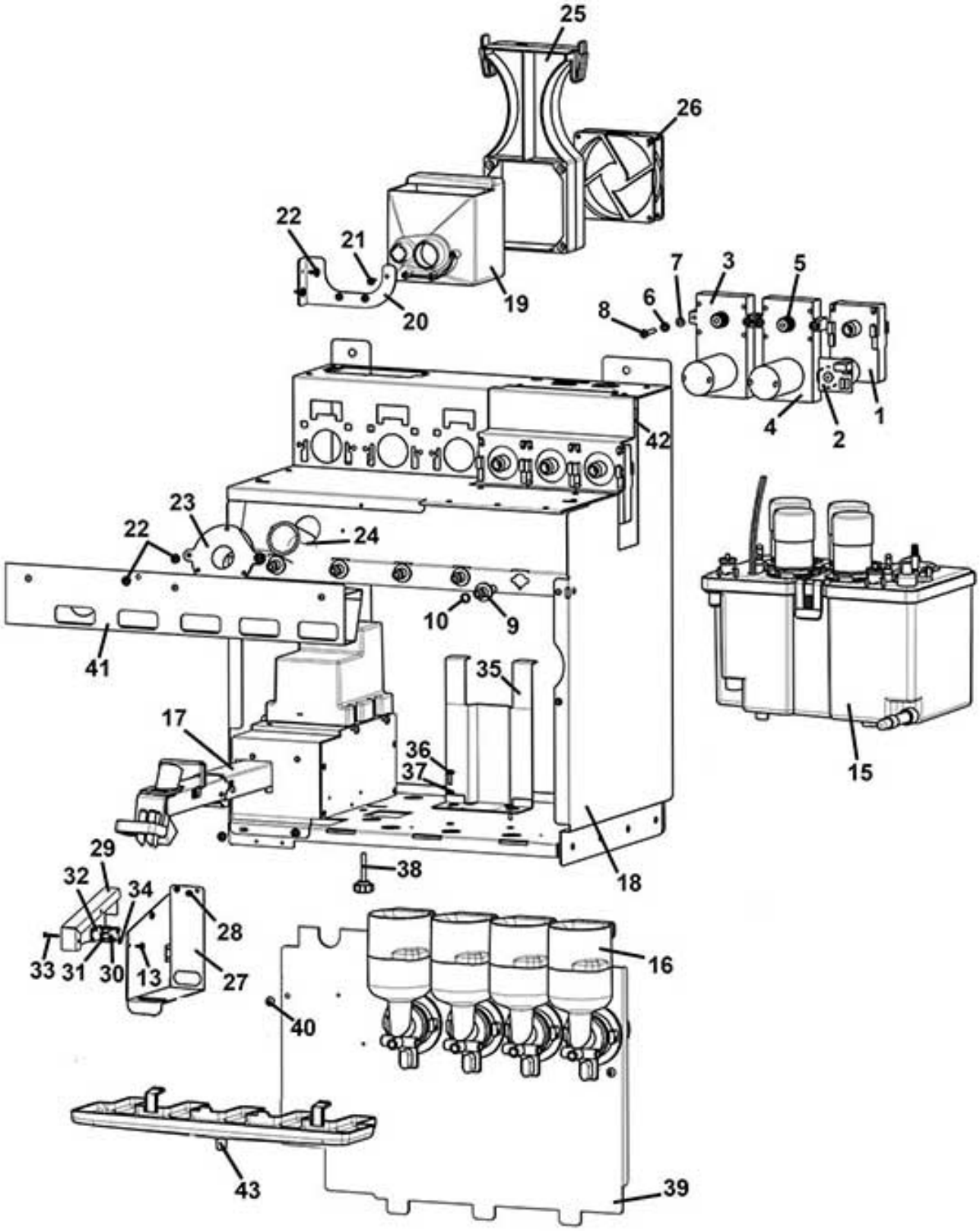

www.rheavendors.com tel: 0039 02 966 551 fax: 0039 02 96 55 086 email: rheavendors@rheavendors.com exclusive property of rheavendors group

solubles dispenser H/6-2 GRINDERS		
Pos.	**Code**	**Description**
1	Z0090002113R	§ GEARBOX MOTOR 24V DC+FILTER
2	SCH0003760	MOTOR FILTER
3	Z0090002082	MOTOR 24 DC 55 RPM
4	Z0090002081	MOTOR 24 DC 85 RPM
5	Z0230012010	PINION
6	VIT0003104	SPRING WASHER 5,3
7	Z0090002079	SPACER
8	VIT0000015	SCREW HEAD TAP CAP M4X25
9/a	Z0080100043	MIXER CONNECTOR BLACK
9/b	Z0080100043-02PL	MIXER CONNECTOR-SHORT BLUE
9/c	Z0080100043-02MD	MIXER CONNECTOR-SHORT GREEN
9/d	Z0080100043-02IC	MIXER CONNECTOR-SHORT ORANGE
10	GUA0000089	OR 2031 RED SILICONE A70
15		See table boiler
16		See table mixer
17		See table distribution pipes movement
18	Z0070020155-06	SOLUBLES HOUSING
19	Z0070020017CY	EXTRACTOR FUNNEL RAL9018
20	Z0070020030	FAN PLATE
21	VIT0002469	SCREW HEAD TAP M3.5X10
22	VIT0002401	SCREW ST HEAD CAP M3.5X9.5
23	Z0010014071	TRAP CONNECTOR
24	TEOL000002	EXTRACTOR TUBE D.30
25	Z0070020024IC	FAN SUPPORT RAL2011
26	ELE0000468R	§ FAN 24V DC-HIGH SPEED-D.92
27	Z0070020231	PIPE SUPPORT GUIDE
28	VIT0002009	SCREW ST HEAD CAP M3.5X6.5
29	Z0070020037	SWITCH COVER
30	ELE0001528	MICROSWITCH
31	NL201106265	MICRO LEVER
32	4600010014	SPACER
33	VIT0000006	SCREW HEAD TAP CAP M3X16
34	VIT0004701	NUT M3
35	Z0070021013	BOILER BRACKET
36	VIT0001005	SCREW HEAD TAP CAP M4X12
37	VIT0003109	SPRING WASHER 4,3
38	VIT0009164	HANDLE
39	Z0070020162	MIXERS SUPPORT H6
40	VIT0000012	SCREW HEAD TAP CAP M4X10
41	Z0070020171	TRAP E6
42	Z0070020169	PRODUCT MOTORS FIXING PLATE
43	Z0070020341CY	POWDER TRAY 9018

www.rheavendors.com tel: 0039 02 966 551 fax: 0039 02 96 55 086 email: rheavendors@rheavendors.com exclusive property of rheavendors group

solubles dispenser H/6-1 GRINDER

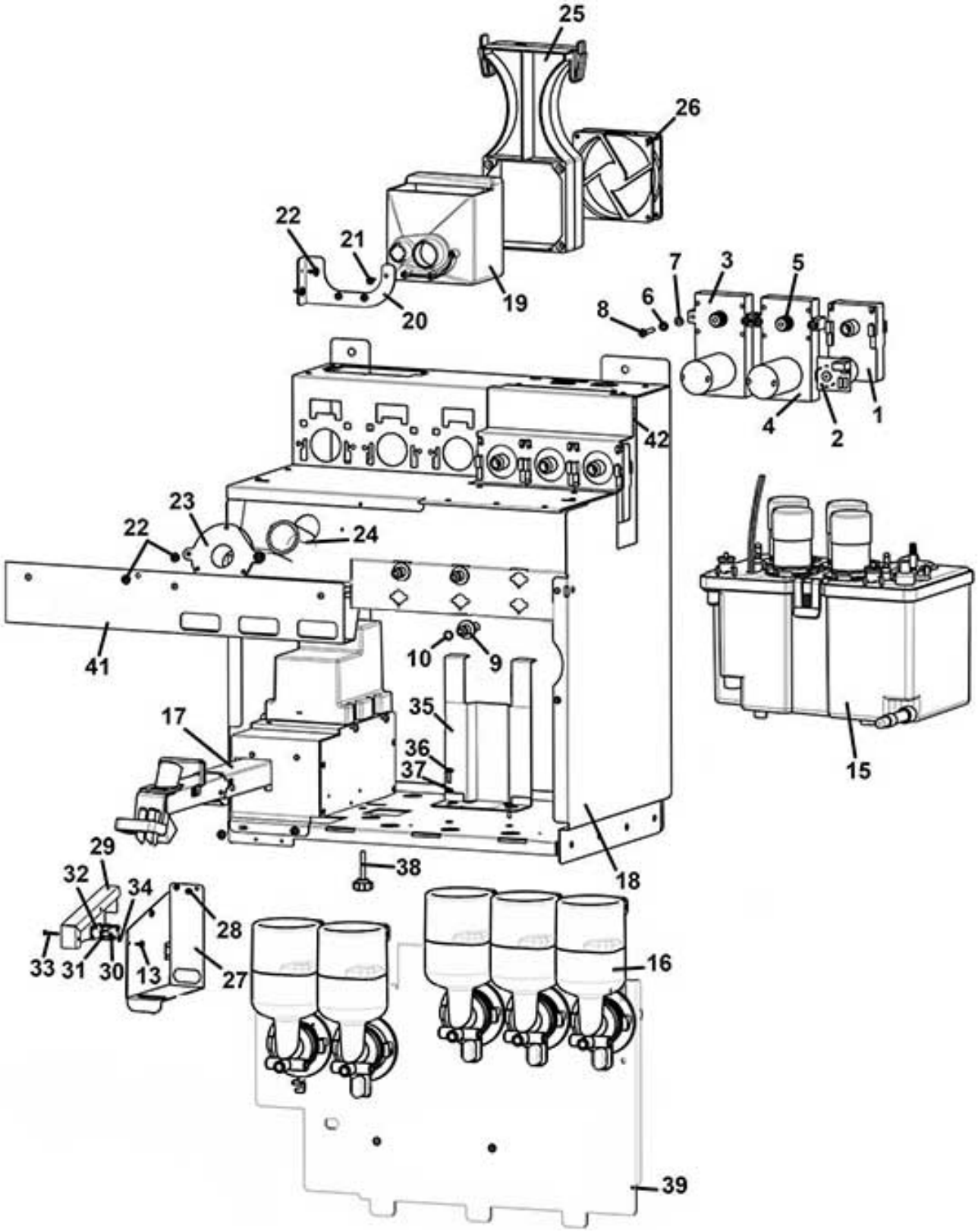

www.rheavendors.com tel: 0039 02 966 551 fax: 0039 02 96 55 086 email: rheavendors@rheavendors.com exclusive property of rheavendors group

solubles dispenser H/6-1 GRINDER		
Pos.	**Code**	**Description**
1	Z0090002113R	§ GEARBOX MOTOR 24V DC+FILTER
2	SCH0003760	MOTOR FILTER
3	Z0090002082	MOTOR 24 DC 55 RPM
4	Z0090002081	MOTOR 24 DC 85 RPM
5	Z0230012010	PINION
6	VIT0003103	SPRING WASHER 4,3
7	Z0090002079	SPACER
8	VIT0000015	SCREW HEAD TAP CAP M4X25
9/a	Z0080100043	MIXER CONNECTOR BLACK
9/b	Z0080100043-02PL	MIXER CONNECTOR-SHORT BLUE
9/c	Z0080100043-02MD	MIXER CONNECTOR-SHORT GREEN
9/d	Z0080100043-02IC	MIXER CONNECTOR-SHORT ORANGE
10	GUA0000089	OR 2031 RED SILICONE A70
15		See table boiler
16		See table mixer
17		See table distribution pipes movement
18	Z007A005005	SOLUBLES HOUSING
19	Z0070020017CY	EXTRACTOR FUNNEL RAL9018
20	Z0070020030	FAN PLATE
21	VIT0002469	SCREW HEAD TAP M3.5X10
22	VIT0002401	SCREW ST HEAD CAP M3.5X9.5
23	Z0010014071	TRAP CONNECTOR
24	TEOL000002	EXTRACTOR TUBE D.30
25	Z0070020024IC	FAN SUPPORT RAL2011
26	ELE0000468R	§ FAN 24V DC-HIGH SPEED-D.92
27	Z0070020231	PIPE SUPPORT GUIDE
28	VIT0002009	SCREW ST HEAD CAP M3.5X6.5
29	Z0070020037	SWITCH COVER
30	ELE0001528	MICROSWITCH
31	NL201106265	MICRO LEVER
32	4600010014	SPACER
33	VIT0000006	SCREW HEAD TAP CAP M3X16
34	VIT0004701	NUT M3
35	Z0070021013	BOILER BRACKET
36	VIT0001005	SCREW HEAD TAP CAP M4X12
37	VIT0003109	SPRING WASHER 4,3
38	VIT0009164	HANDLE
39	Z007A005015	MIXERS SUPPORT H6
41	Z007A005010	MIXED H6 TRAP
42	Z0070020169	PRODUCT MOTORS FIXING PLATE

www.rheavendors.com tel: 0039 02 966 551 fax: 0039 02 96 55 086 email: rheavendors@rheavendors.com exclusive property of rheavendors group

solubles dispenser H/7

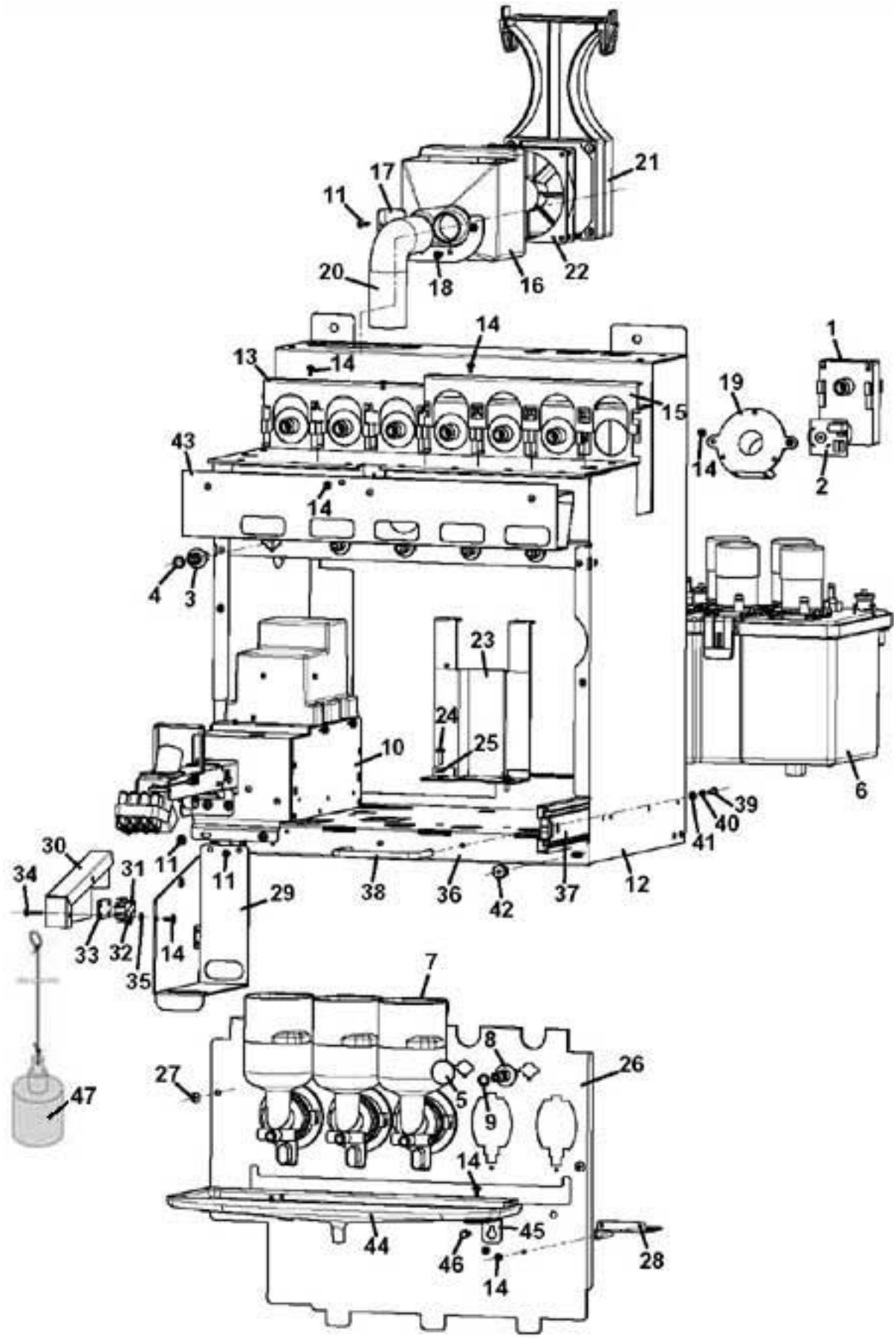

www.rheavendors.com tel: 0039 02 966 551 fax: 0039 02 96 55 086 email: rheavendors@rheavendors.com exclusive property of rheavendors group

solubles dispenser H/7		
Pos.	**Code**	**Description**
1	Z0090002113	MOTOR 24 DC 97 RPM
2	SCH0009100	MOTORS FILTER
3/a	Z0080100043	MIXER CONNECTOR BLACK
3/b	Z0080100043-02PL	MIXER CONNECTOR-SHORT BLUE
3/c	Z0080100043-02MD	MIXER CONNECTOR-SHORT GREEN
3/d	Z0080100043-02IC	MIXER CONNECTOR-SHORT ORANGE
3/e	Z0080100043-02KA	MIXER CONNECTOR-SHORT RED
4	GUA0000089	OR 2031 RED SILICONE A70
6		See table boiler
7		See table mixer
10		See table distribution pipes movement
11	VIT0002401	SCREW ST HEAD CAP M3.5X9.5
12	Z0070021155	HOUSING H7
13	Z0070021014	3 PRD.MOTORS SUPPORT
14	VIT0002009	SCREW ST HEAD CAP M3.5X6.5
15	Z0070021015	4 PRD.MOTORS SUPPORT
16	Z0070020017CY	EXTRACTOR FUNNEL RAL9018
17	Z0070020030	FAN PLATE
18	VIT0002469	SCREW HEAD TAP M3.5X10
19	Z0010014071	TRAP CONNECTOR
20	TEOL000002	EXTRACTOR TUBE D.30
21	Z0070020024IC	FAN SUPPORT RAL2011
22	ELE0000468R	§ FAN 24V DC-HIGH SPEED-D.92
23	Z0070021013	BOILER BRACKET
24	VIT0001005	SCREW HEAD TAP CAP M4X12
25	VIT0003109	SPRING WASHER 4,3
26	Z0070021162	MIXER SUPPORT
27	VIT0000030	SCREW HEAD TAP CAP M4X7
28	Z0070020351	CONNECTOR SUPPORT
29	Z0070020231	PIPE SUPPORT GUIDE
30	Z0070020037	SWITCH COVER
31	ELE0001528	MICROSWITCH
32	NL201106265	MICRO LEVER
33	4600010014	SPACER
34	VIT0000006	SCREW HEAD TAP CAP M3X16
35	VIT0004701	NUT M3
36	Z0070021012-03	MIXERS HOUSING BOTTOM
37	Z0070015144	TELESCOPICS GUIDE
38	Z0070015143	BOTTOM EXTRACTABLE HANDLE
39	VIT0000004	SCREW HEAD TAP CAP M3X10
40	VIT0003102	SPRING WASHER 3,2
41	VIT0003002	WASHER 3,2X7X0,5
42	Z0180012157	SCREW
43	Z0070021157	TRAP H7
44	Z0070021022NA	DUST COLLECTION TRAY
45	Z0070021023	DUST TRAY FIXING PLATE
46	4002010055	PIN

www.rheavendors.com tel: 0039 02 966 551 fax: 0039 02 96 55 086 email: rheavendors@rheavendors.com exclusive property of rheavendors group

solubles dispenser H/7		
47	Z0070020038CL2	§ WASTE FLOAT
101	Z0090002113R2	§ GEARBOX MOTOR 24V DC+FILTER (Pos.1 + 2)

www.rheavendors.com tel: 0039 02 966 551 fax: 0039 02 96 55 086 email: rheavendors@rheavendors.com exclusive property of rheavendors group

mixer

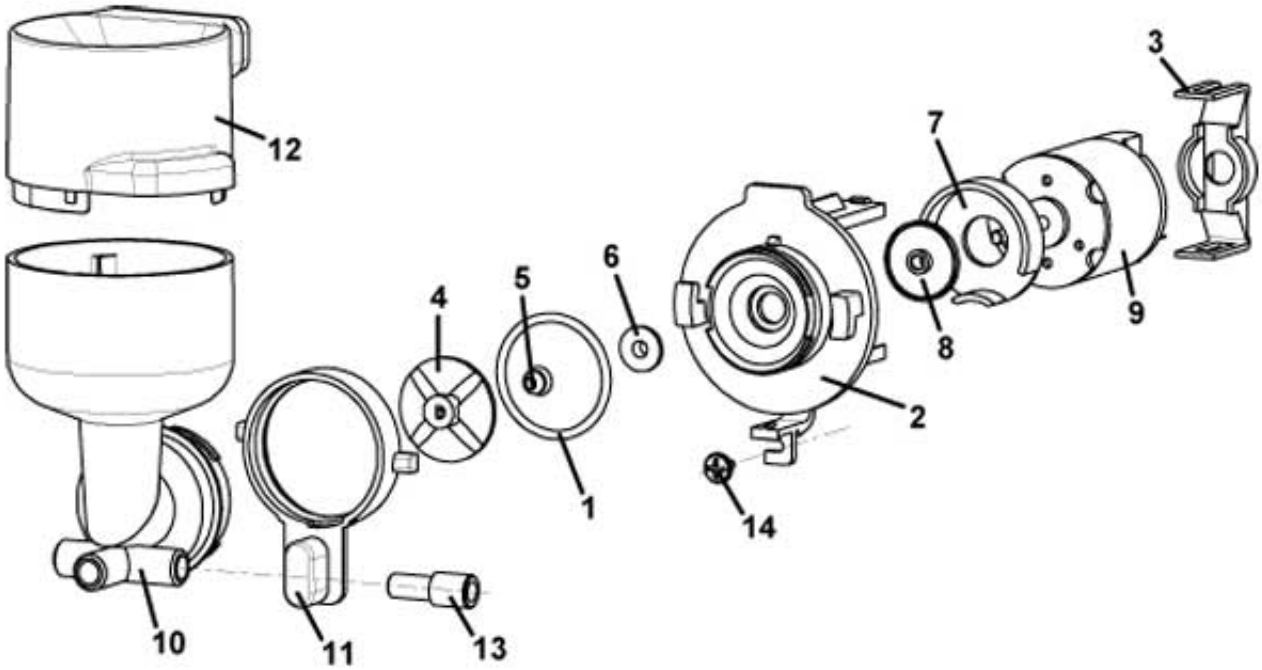

www.rheavendors.com tel: 0039 02 966 551 fax: 0039 02 96 55 086 email: rheavendors@rheavendors.com exclusive property of rheavendors group

mixer		
Pos.	**Code**	**Description**
1	GUA0000084	OR 3131 RED SILICONE A60
2	Z0080100005	MOTOR MIXER BASE
3	Z0080100009IC	MIXER MOTOR SUPPORT RAL2011
4	Z0080100011	MIXER FAN
5	Z0080100102	MIXER SHAFT GASKET
6	Z0080100015	MIXER BUSH
7	Z0080100023IC	MIXER COVER RAL2011
8	Z0080100024	MIXER FAN
9	Z0090003023	MIXER MOTOR 24V DC SHAFT D.4
10/a_1	Z0080200110L	MIXING BOWL L.W/H20 BREAKER
10/b_1	Z0080200111R	MIXING BOWL R.W/H20 BREAKER
10/c_1	Z0080200112C	MIXING BOWL F.W/H20 BREAKER
10/a_2	Z0080200107L	MIXING BOWL L.W/O H2O BREAKER
10/b_2	Z0080200108R	MIXING BOWL R.W/O H2O BREAKER
10/c_2	Z0080200109C	MIXER BODY W/O LINE CENTER
11	Z0080100006IC	LOCK RING RAL2011
12/a	Z0080100031NA	MIXING BOWL EXTRACTOR D.4,25
12/b	Z0080100029CK	MIXING BOWL EXTRACTOR D.2,3
12/c	Z0080100142NA	MIXING BOWL EXTRACTOR D4 BLACK
12/d	Z0080100143CK	MIXING BOWL EXTRACTOR D.2 7037
13	Z0080100095	TUBE REDUCER D.4
14	VIT0002401	SCREW ST HEAD CAP M3.5X9.5
100	Z0080100001R	§ MIXER BOWL BASE+MOTOR (from pos.1 to pos.9)

www.rheavendors.com tel: 0039 02 966 551 fax: 0039 02 96 55 086 email: rheavendors@rheavendors.com exclusive property of rheavendors group

boiler

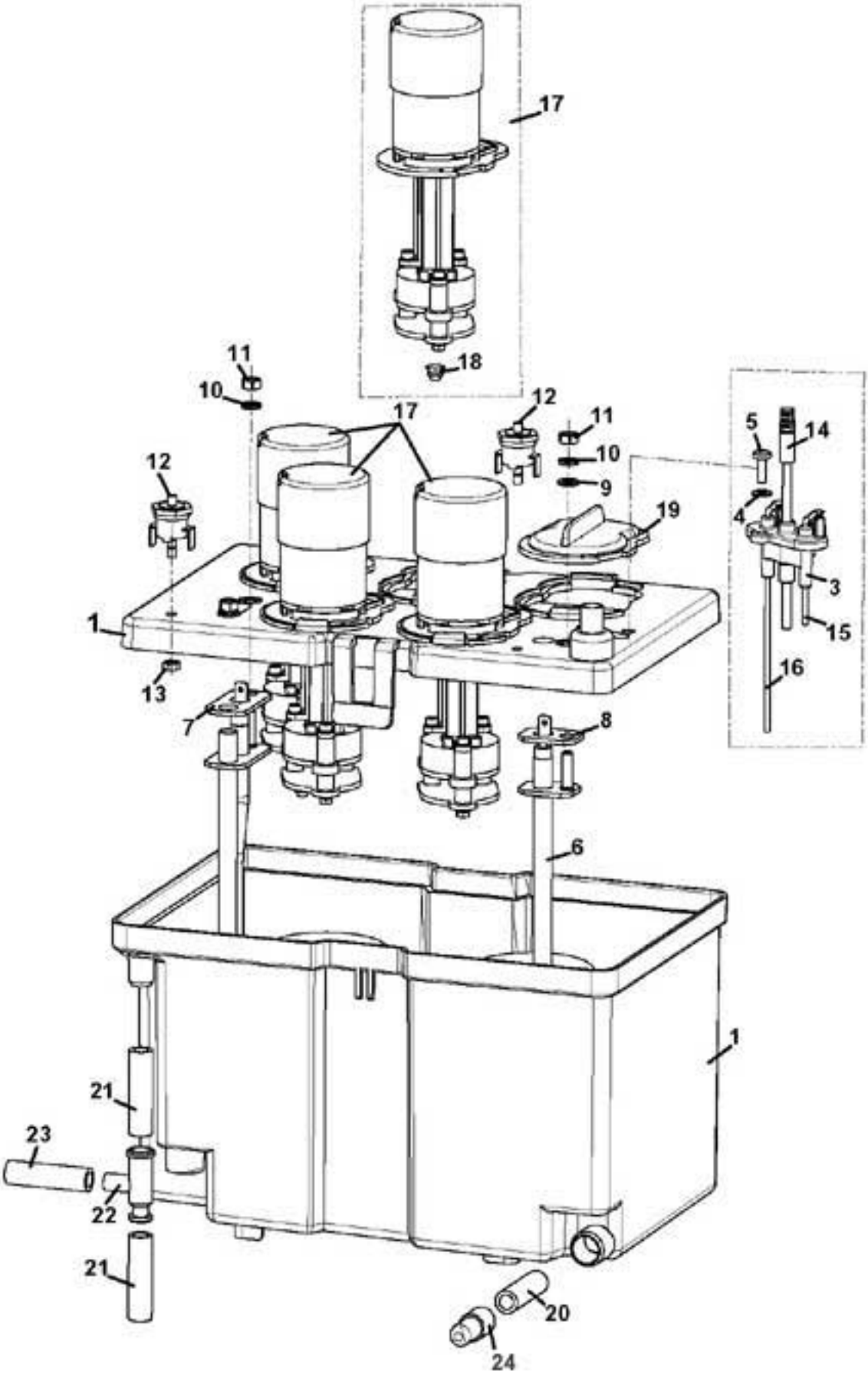

www.rheavendors.com tel: 0039 02 966 551 fax: 0039 02 96 55 086 email: rheavendors@rheavendors.com exclusive property of rheavendors group

boiler		
Pos.	**Code**	**Description**
1	Z0600014111R	§ TANK+BOILER COVER
3	Z0600016089	PROBE SUPPORT
4	VIT0003211	WASHER 4,3X9X0,8
5	VIT0001005	SCREW HEAD TAP CAP M4X12
6	Z0600016138R	§ HEATING ELEMENT 1600W 230V
7	Z0600014113-02	HEATING ELEM GASKET
8	Z0600014114-01	BOILER STRENGHT GASKET 5P
9	VIT0003203	WASHER 5,3X10X1
10	VIT0003111	SPRING WASHER 5,3
11	VIT0004804	NUT M5
12	ELE0000965	CLIXSON 88°
13	VIT0004816	NUT M4
14	ELE0000978R	SOLUBLES PROBE 80MM
15	Z0600016054	MAXIMUM LEVEL PROBE
16	Z0600016053	MINIMUM LEVEL PROBE
17	Z0600016405R	§ BOILER PUMP
18	Z0080100102	MIXER SHAFT GASKET
19	Z0600016422	PUMP LID
20/a	TSIL10/14T-10	SILICON HOSE 10X14 MT.10
20/b	TSIL10/14T-50	SILICON HOSE 10X14 MT.50
21/a	TSIL07/11T-10	SILICON HOSE 7X11 MT.10
21/b	TSIL07/11T-50	SILICON HOSE 7X11 MT.50
22	Z0600016028	T CONNECTOR
23/a	TSIL05/08T-10	SILICON HOSE 5X8 MT.10
23/b	TSIL05/08T-50	SILICON HOSE 5X8 MT.50
24	650001057	DRAINER PLUG
100	Z0600014100R2	§ BOILER 4PUMP
101	Z0600014101R2	§ BOILER 3PUMP 1600W 230V
102	Z0600014102R2	§ BOILER 5PUMP 1600W 230V

www.rheavendors.com tel: 0039 02 966 551 fax: 0039 02 96 55 086 email: rheavendors@rheavendors.com exclusive property of rheavendors group

distribution pipes movement

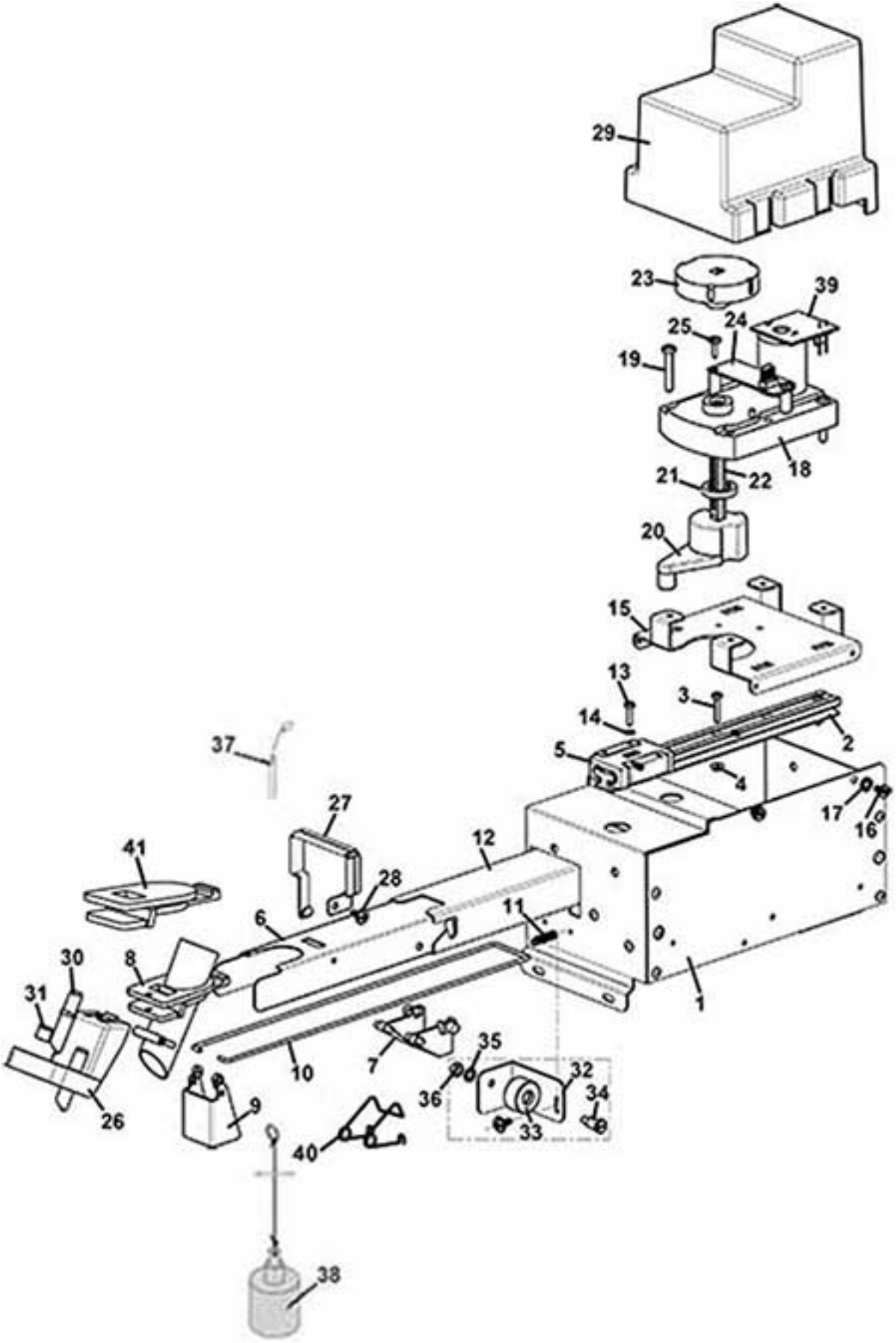

www.rheavendors.com tel: 0039 02 966 551 fax: 0039 02 96 55 086 email: rheavendors@rheavendors.com exclusive property of rheavendors group

distribution pipes movement		
Pos.	**Code**	**Description**
1/a	Z0380010827-03	PIPE MOVEMENT HOUSING
1/b	Z0380010865	PIPE MOVEMENT HOUSING
2	Z0380010796	NOZZLE HOLDER
3	VIT0000006	SCREW HEAD TAP CAP M3X16
4	VIT0004701	NUT M3
5	Z0380010798	NOZZLE MOVEMENT GUIDE
6	Z0380010821	NOZZLE HOLDER
7	Z0380010599	NOZZLE MOVEMENT BUTTON
8	Z0380011229NA	SUGAR CHUTE
9	Z0380010424NA	SUGAR SPLITTER
10	Z0380010823	BRACKET
11	Z0380010431	SPRING
12	Z0380010826	NOZZLE MOVEMENT SLIDE
13	VIT0000005	SCREW HEAD TAP CAP M3X12
14	VIT0003102	SPRING WASHER 3,2
15/a	Z0380010693	GEAR MOTOR SUPPORT
15/b	Z0380010867	MOTOR SUPPORT
16	VIT0002009	SCREW ST HEAD CAP M3.5X6.5
17	VIT0003103	SPRING WASHER 4,3
18	Z0090002109	GEAR MOTOR 24 RPM 24V DC
19	VIT0000015	SCREW HEAD TAP CAP M4X25
20	Z0380010694	NOZZLE MOVEMENT CAM
21	Z0380010831	BUSH 20x4
22	Z0380009542	SUGAR DISPENSER SHAFT
23	Z0380009541	POSITION DISK NOZZLE MOVEMENT
24	SCH0003700	TUBES SENSOR
25	VIT0002125	SCREW ST HEAD CAP M3.9X9,5
26	Z0380010655NA/L	NOZZLES HOLDER
27/a	Z0380010882NA	CLAMP FIXING PIPES
27/b	Z0380010882NA	CLAMP FIXING PIPES
28	VIT0002004	SCREW ST HEAD CAP M3.5X13
29	Z0380010695NA	NOZZLE MOVEMENT COVER BLACK
30	Z0380010657NA	ESPRESSO NOZZLE D. 5,7
31	Z0380010656NA	PLUG BLACK
32	Z0380012221	BRACKET
33	Z0380012225NA	BEARING
34	Z0200001012	PIN BEARING
35	VIT0004503	NUT M4
36	VIT0003103	SPRING WASHER 4,3
37	Z0380010429CL	§ FIXING PLATE PIN
38	Z0070020038CL2	§ WASTE FLOAT
39	SCH0003740	MOTOR FILTER
40	Z0380010629	SPRING
41	Z0380010459NA	NOZZLE SUPPORT PLATE BLACK
100	Z0380010792CL	§ ESPRESSO NOZZLES MOVEMENT From pos. 1 to pos. 25 (excluded pos. 1/b e 15/b) and from pos. 32 to pos. 36+39
101	Z0380010860CL	§ESPR.NOZZLES MOVEMENT E9 EE9 From pos. 1 to pos. 25 (excluded pos. 1/a e 15/a) and from pos. 32 to pos. 36+39
102	Z0380010861CL	§ INSTANT NOZZLES MOVEMENT I10 From pos. 1 to pos. 25 (excluded pos. 1/a,8,9,10,11 e 15/a) and from pos. 32 to pos. 36+39+40+41

www.rheavendors.com tel: 0039 02 966 551 fax: 0039 02 96 55 086 email: rheavendors@rheavendors.com exclusive property of rheavendors group

1 BLACK GRINDER - VARIFLEX COFFEE GROUP HOUSING

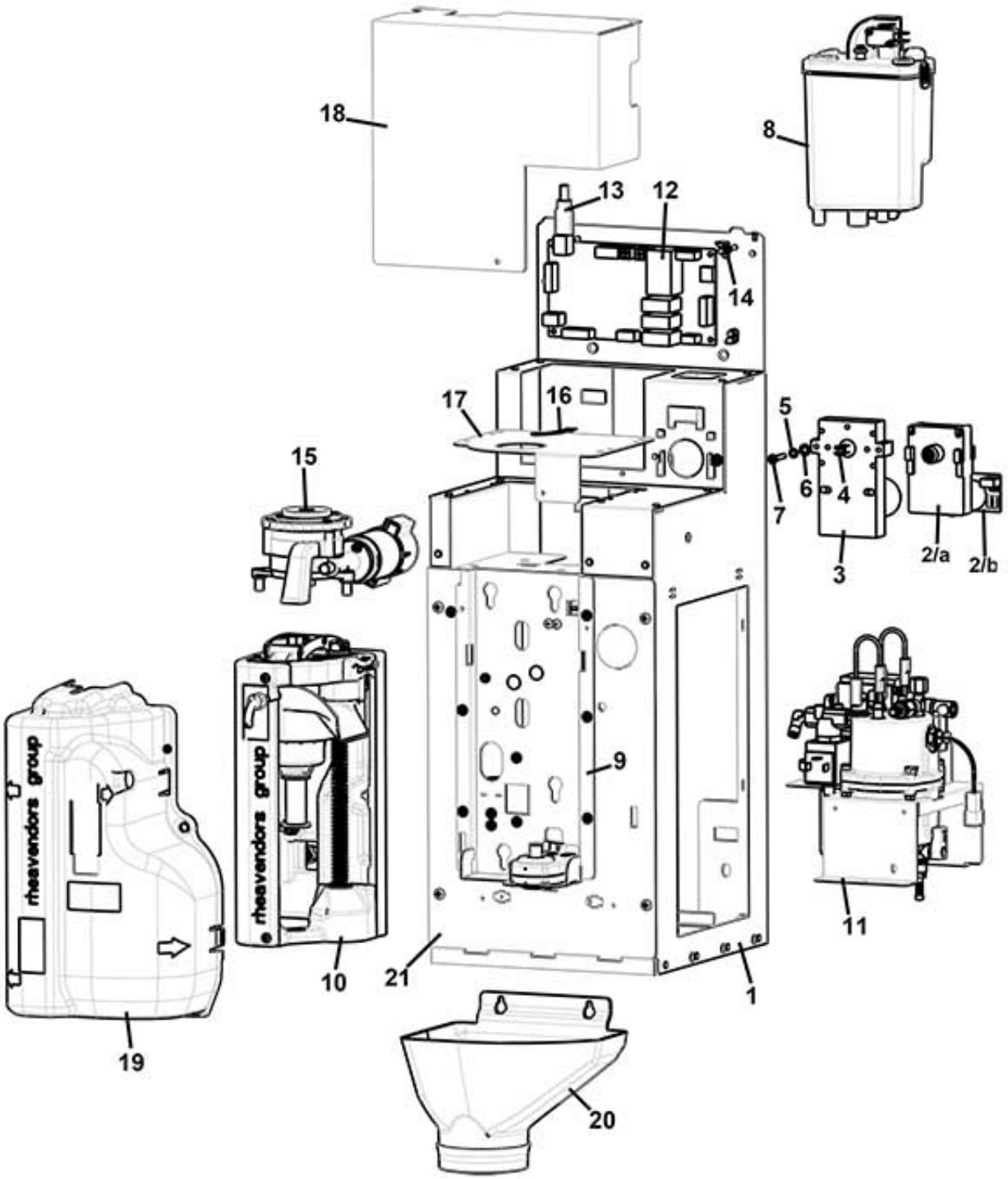

www.rheavendors.com tel: 0039 02 966 551 fax: 0039 02 96 55 086 email: rheavendors@rheavendors.com exclusive property of rheavendors group

1 BLACK GRINDER - VARIFLEX COFFEE GROUP HOUSING		
Pos.	**Code**	**Description**
1	Z0260014455-06	VARIF. HOUSING 1 BLACK GRINDER
2/a	Z0090002113	MOTOR 24 DC 97 RPM
2/b	SCH0003760	MOTOR FILTER
3	Z0090002082	MOTOR 24 DC 55 RPM
4	Z0230012010	PINION
5	VIT0003103	SPRING WASHER 4,3
6	Z0090002079	SPACER
7	VIT0000015	SCREW HEAD TAP CAP M4X25
8		See table water inlet panel
9		See table PRO BREWER SUPPORT+MOTOR
10		See table PROFESSIONAL BREWER GROUP D.45
11		See table 400CC ESPRESSO S.STEEL BOILER SUPPORT
12	BRD03002	2M FS COFFEE BREWER BOARD
13	ELT0030874	USB WIRING 1,5MT
14	ELE0062008	BOARD SUPPORT
15		See table horizontal grinder
16	Z0320004729	GRINDER REGULATION LABEL
17	Z0260014464	CONTAINER SUPPORT
18	Z0260011134	BOARD COVER
19	Z0250014074CL1	§ VARIFLEX BREWER COVER-FS
20	Z0070015151NA	GROUNDS CONTAINER
21	Z0260014463-03	1 GRINDER-VARIFLEX COFFEE GR.
100	Z0090002113R	§ GEARBOX MOTOR 24V DC+FILTER Pos.2/a+2/b

www.rheavendors.com tel: 0039 02 966 551 fax: 0039 02 96 55 086 email: rheavendors@rheavendors.com exclusive property of rheavendors group

2 BLACK GRINDER - VARIFLEX COFFEE GROUP HOUSING

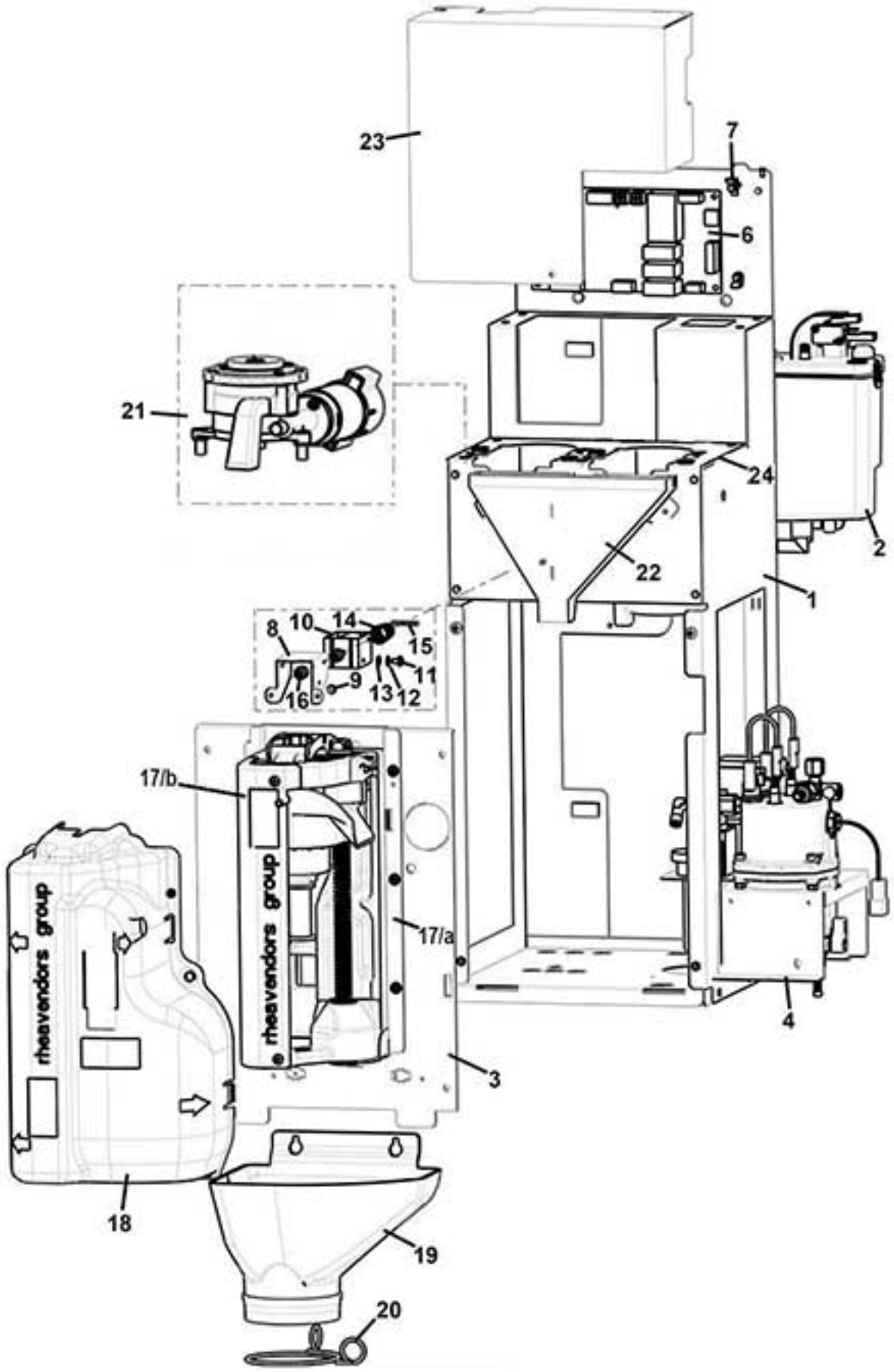

www.rheavendors.com tel: 0039 02 966 551 fax: 0039 02 96 55 086 email: rheavendors@rheavendors.com exclusive property of rheavendors group

2 BLACK GRINDER - VARIFLEX COFFEE GROUP HOUSING		
Pos.	**Code**	**Description**
1	Z0260014505-05	HOUSING VRFLX BREWER 2GRINDER
2		See table water inlet panel
3	Z0260014514-04	2 GRINDERS VARIFLEX SUPPORT
4		See table 400CC ESPRESSO S.STEEL BOILER SUPPORT
6	BRD03002	2M FS COFFEE BREWER BOARD
7	ELE0062008	BOARD SUPPORT
8	Z0260014564	ELCTROMAGNET SUPPORT
9	VIT0002009	SCREW ST HEAD CAP M3.5X6.5
10	ELE0000062	15% 24VDC ELECTROMAGNET W/FAST
11	VIT0000021	SCREW HEAD TAP CAP M4X6
12	VIT0003003	WASHER 4,3X8X0,8
13	VIT0003103	SPRING WASHER 4,3
14	Z0380011419	SPRING
15	VIT0005212	DOWEL PIN 2.5X24
16	Z0260013022	PIN
17/a		See table PRO BREWER SUPPORT+MOTOR
17/b		See table PROFESSIONAL BREWER GROUP D.45
18	Z0250014074CL1	§ VARIFLEX BREWER COVER-FS
19	Z0070015151NA	GROUNDS CONTAINER
20	Z0070015149	GROUNDS BAG FIXING SPRING
21		See table horizontal grinder
22	Z0320005161NA	COFFEE CHUTE 2 GRINDER
23	Z0260014512	BOARD COVER
24	Z0260014511-01	COFFEE BEANS CONTAINER SUPPORT

www.rheavendors.com tel: 0039 02 966 551 fax: 0039 02 96 55 086 email: rheavendors@rheavendors.com exclusive property of rheavendors group

water inlet panel

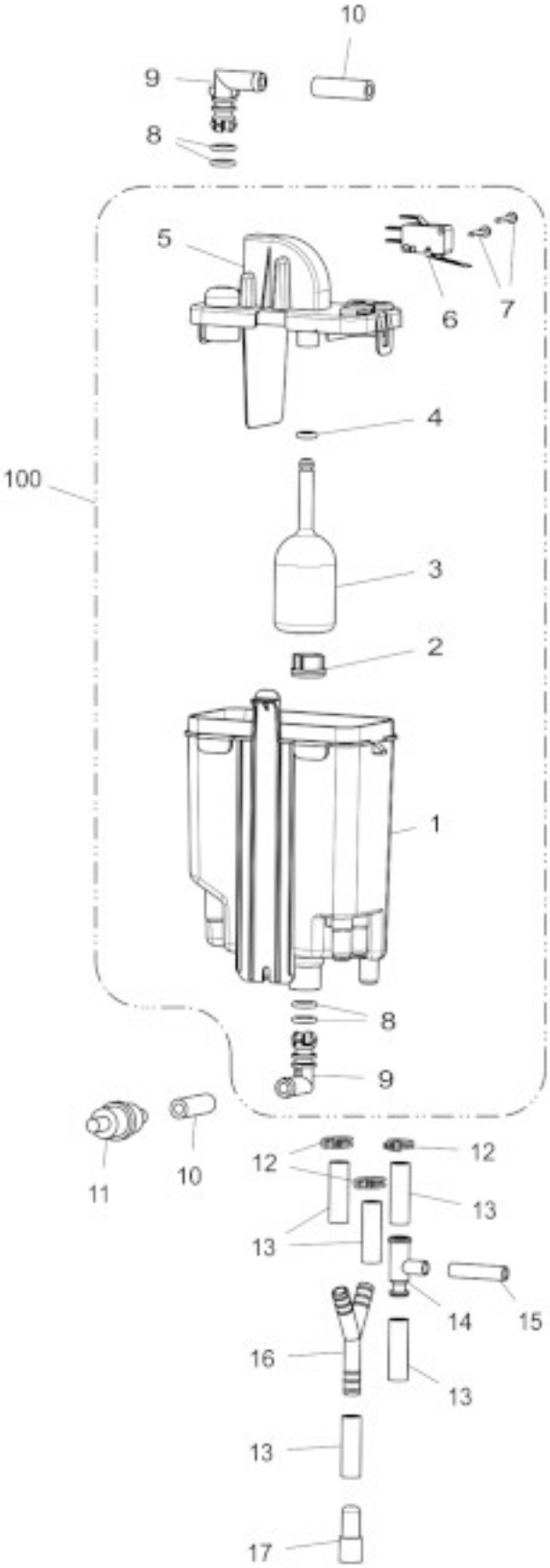

www.rheavendors.com tel: 0039 02 966 551 fax: 0039 02 96 55 086 email: rheavendors@rheavendors.com exclusive property of rheavendors group

water inlet panel		
Pos.	**Code**	**Description**
1	Z0800013041	AIR BREAK TANK
2	Z0110020007	PLASTIC FILTER DIAM. 20
3	Z0800013046	AIR BREAK WASTE FLOAT
4	GUA0000082	SILICON GASKET D.6
5	Z0800013043	AIR BREAK COVER
6	ELE0001514	MICROSWITCH 3A 125-250VA
7	VIT0002013	SCREW ST HEAD CAP M2.9X19
8	GUA0000043	OR 109 NBR AL 75 BLACK
9	Z0800009211	ELBOW CONNECTOR
10/a	TSIL06/11T-10	SILICON HOSE 6X11 MT.10
10/b	TSIL06/11T-50	SILICON HOSE 6X11 MT.50
11	Z0109002002	H2O FILTER
12	FASC000109	CLAMP
13/a	TSIL07/11T-10	SILICON HOSE 7X11 MT.10
13/b	TSIL07/11T-50	SILICON HOSE 7X11 MT.50
14	Z0600016028	T CONNECTOR
15/a	TSIL05/08T-10	SILICON HOSE 5X8 MT.10
15/b	TSIL05/08T-50	SILICON HOSE 5X8 MT.50
16	Z0100001065	CONNECTOR "Y"
17	650001057	DRAINER PLUG
100	Z0800014001R	§ AIR BREAK FS

www.rheavendors.com tel: 0039 02 966 551 fax: 0039 02 96 55 086 email: rheavendors@rheavendors.com exclusive property of rheavendors group

400CC ESPRESSO S.STEEL BOILER SUPPORT

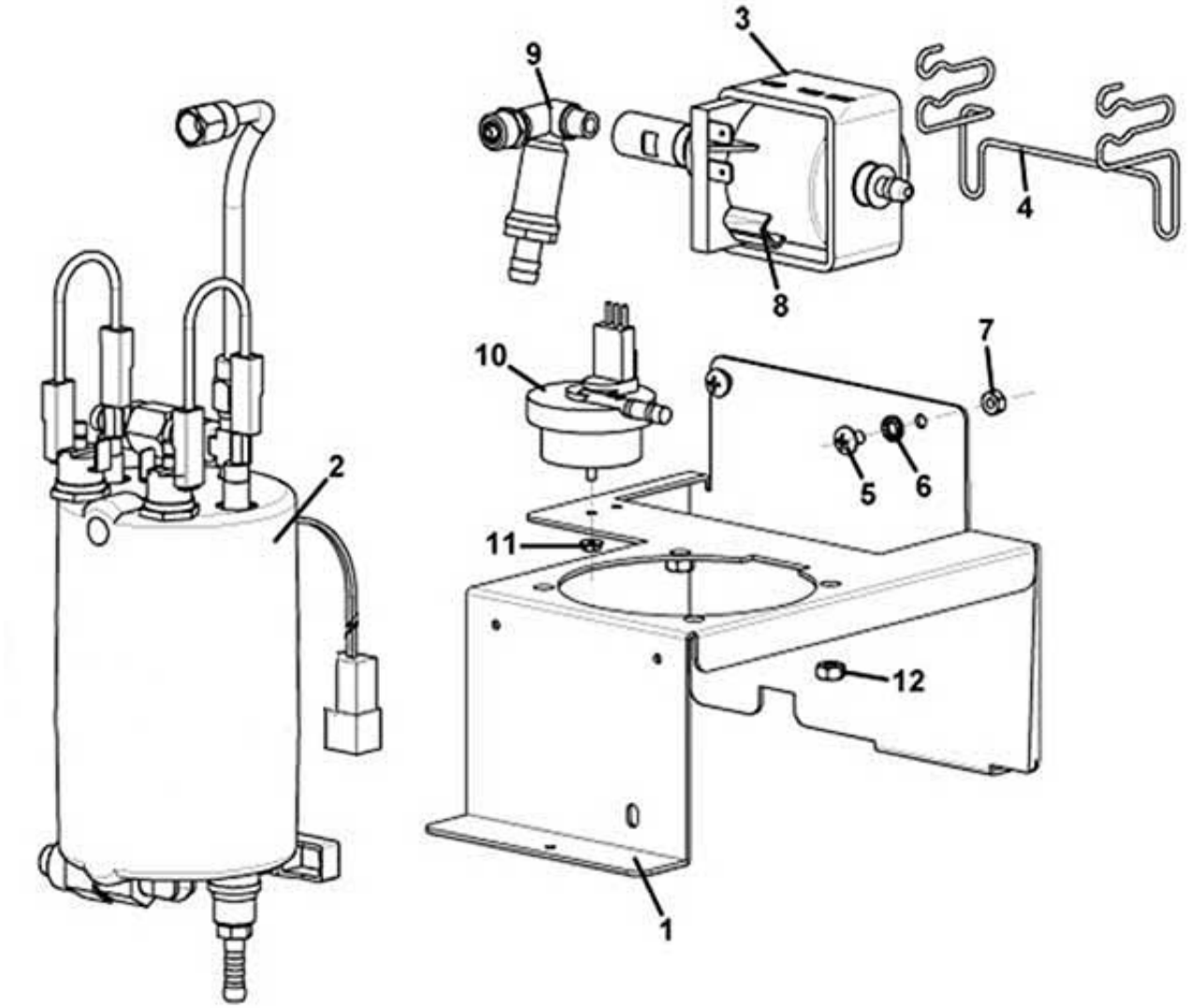

www.rheavendors.com tel: 0039 02 966 551 fax: 0039 02 96 55 086 email: rheavendors@rheavendors.com exclusive property of rheavendors group

400CC ESPRESSO S.STEEL BOILER SUPPORT		
Pos.	**Code**	**Description**
1	Z0260014476	HYDRIC COMPONENTS SUPPORT
2		See table ESPRESSO BOILER STAINLESS STEEL 400CC
3	Z0110004041	PUMP EX5 230V-50HZ
4	Z0110004038	PUMP SUPPORT
5	VIT0000030	SCREW HEAD TAP CAP M4X7
6	VIT0003103	SPRING WASHER 4,3
7	VIT0004503	NUT M4
8	ELE0000915	PUMP THERMOPROTECTOR
9	Z0110004070	BY PASS VALVE 11 BAR
10	Z0110007003	VOLUMETRIC COUNTER
11	VIT0004701	NUT M3
12	VIT0004504	NUT M5

www.rheavendors.com tel: 0039 02 966 551 fax: 0039 02 96 55 086 email: rheavendors@rheavendors.com exclusive property of rheavendors group

ESPRESSO BOILER STAINLESS STEEL 400CC

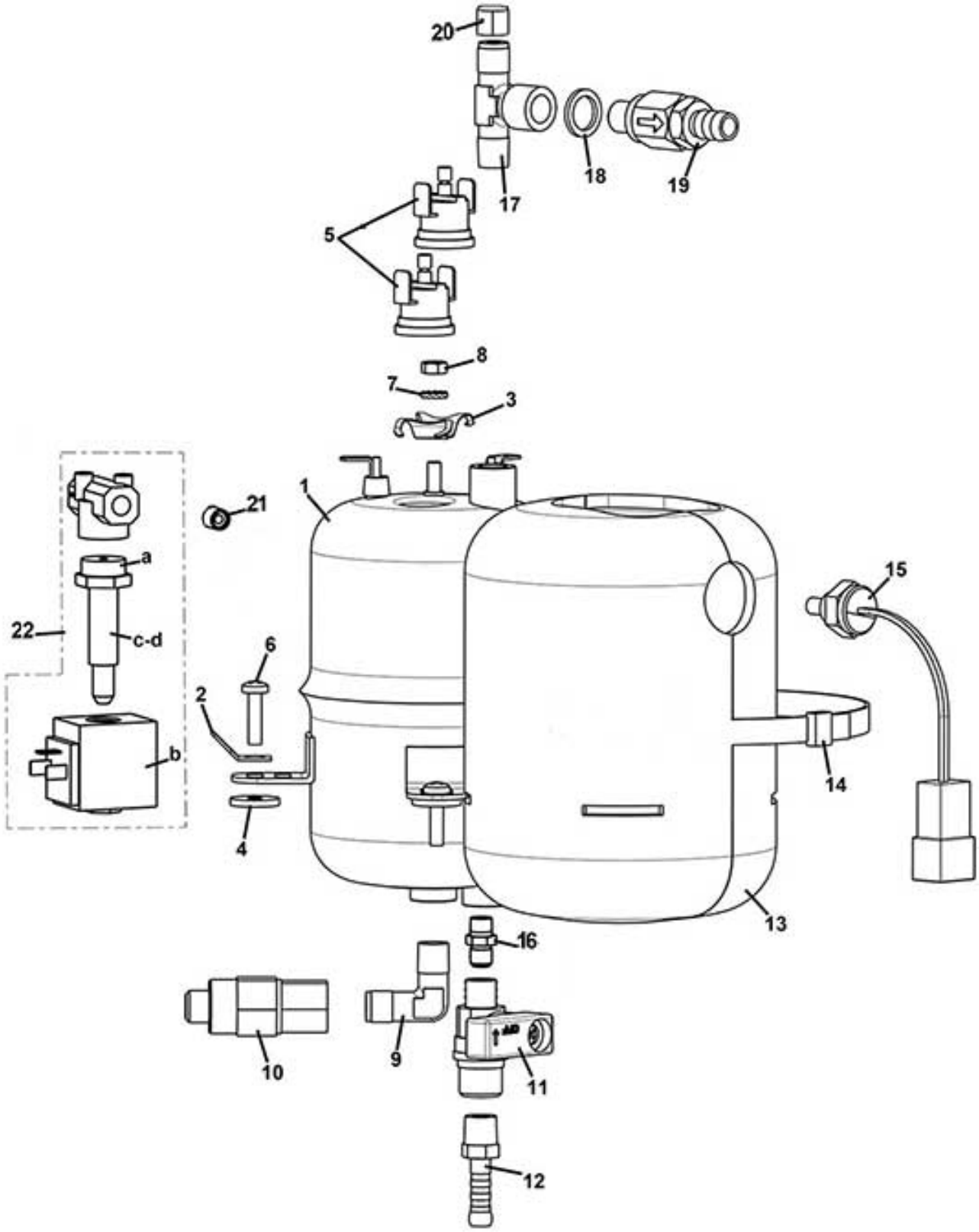

www.rheavendors.com tel: 0039 02 966 551 fax: 0039 02 96 55 086 email: rheavendors@rheavendors.com exclusive property of rheavendors group

ESPRESSO BOILER STAINLESS STEEL 400CC		
Pos.	**Code**	**Description**
1	Z0600019701CL	§ BOILER 1500 W 230V 400 CC (From pos.1 to pos. 8)
2	Z0600019012	GROUND WIRING
3	Z0600019188	THERMOSTAT CLIP
4	1600001098	RUBBER SPACER D. 4,5
5	ELE0000982	CLIXSON 127°
6	VIT0001008	STAINLESS STEEL SCREW T.C.B. M
7	VIT0003109	SPRING WASHER 4,3
8	VIT0004816	NUT M4
9	Z0100001019	ELBOW CONNECTOR SO2400-6-1/8
10	Z0110002029	SAFETY VALVE M:1/8GAS
11	Z0600019017	TAP M/F 1/8
12	Z0100001090	ELECTRICAL GROMMET D.7-1/8
13	Z0600019195	INSULATION SHELL
14	FASC000214	PLASTIC CLIP BLACK 7,8X365
15	ELE0000975	PROBE
16	Z0100001017	STRAIGHT CONNECT SO1100-6-1/8
17	Z0100001086	T CONNECTOR 1/8
18	Z0100003016	COPPER GASKET D.13.4X10.2X1.5
19	Z0110002013	SAFETY VALVE 1/8M D.9
20	Z0110004089	PLUG
21	Z0100001084	NIPPLE 1/8
22	Z0110001072	VALVE 3W 1/8 24DC O
22/a		
22/b	Z0110010065	COIL 8 W 24 DC
22/c_d		COMPONENT NO MORE SELLING
101	Z0600019787CL	§ STAINLESS STEEL BOILER 230V

www.rheavendors.com tel: 0039 02 966 551 fax: 0039 02 96 55 086 email: rheavendors@rheavendors.com exclusive property of rheavendors group

PRO BREWER SUPPORT+MOTOR

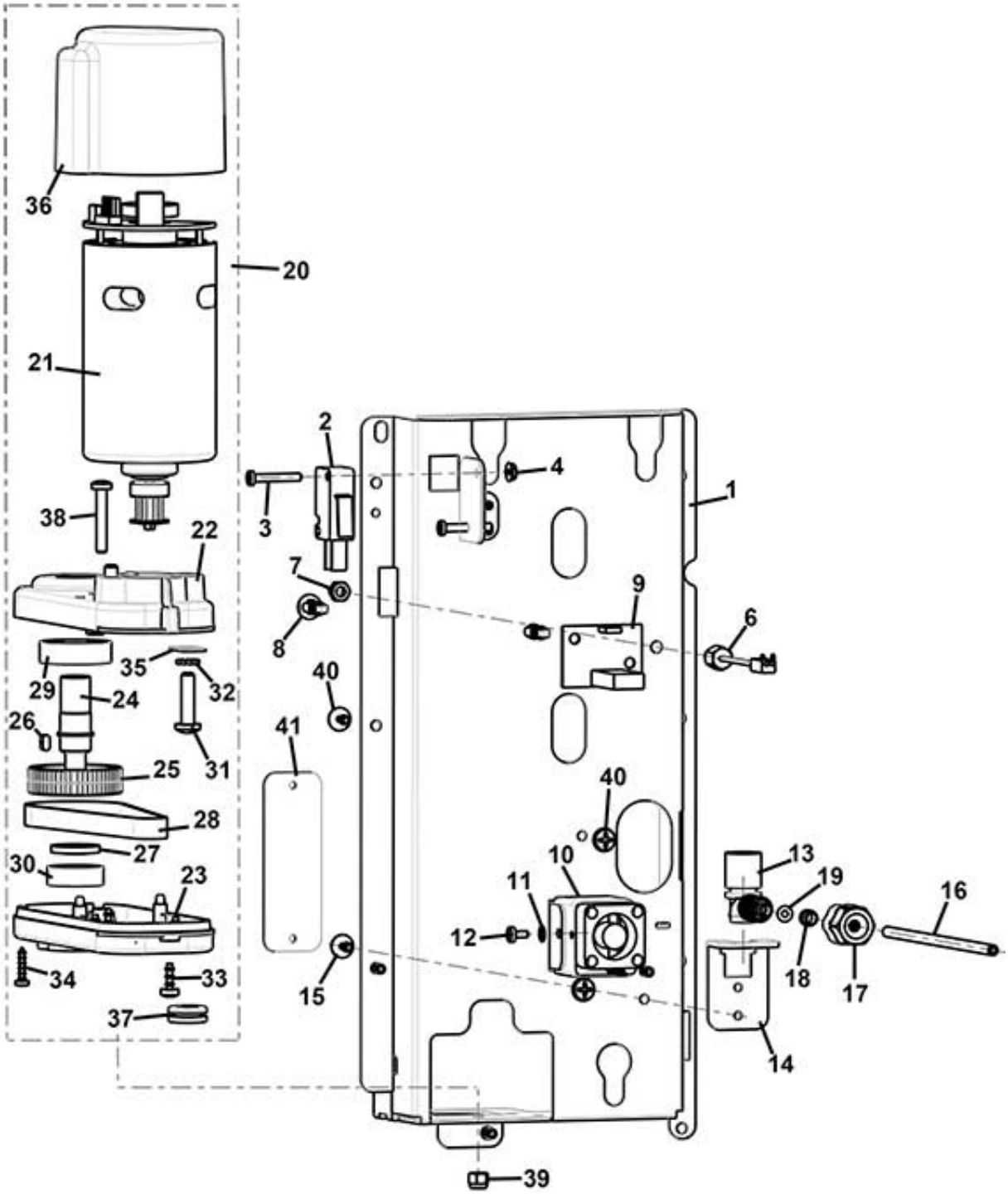

www.rheavendors.com tel: 0039 02 966 551 fax: 0039 02 96 55 086 email: rheavendors@rheavendors.com exclusive property of rheavendors group

PRO BREWER SUPPORT+MOTOR		
Pos.	**Code**	**Description**
1	Z0260014042	VARIFLEX BREWER SUPPORT
2	ELE0001522	MICROSWITCH
3	VIT0000006	SCREW HEAD TAP CAP M3X16
4	VIT0004701	NUT M3
6	ELE0000931	PROBE NTC 10K/TE
7	VIT0004803	NUT M4
8	ELE0062020	BOARD SUPPORT
9		Heater board sold with code ELE0000467-02
10	ELE0000467-02	FAN HEATER 24V DC + BOARD
11	VIT0003102	SPRING WASHER 3,2
12	VIT0000002	SCREW HEAD TAP CAP M3X6
13	Z0250014084-02	FEMALE CONNECTOR
14	Z0260014009-01	H2O CONNECTOR SUPPORT
15	VIT0002009	SCREW ST HEAD CAP M3.5X6.5
16	TTEF02/04T	PTFE PIPE 2X4
17	Z0250014086	NUT
18	Z0100002014	LOCKING RING SO1-4
19	GUA0000061	OR 2010 VITON 80 BLACK
20	Z0090002250R	§ VARIFLEX BREW. GEARBOX MOTOR From pos. 21 to pos.37
21	Z0090002252-01	§ MOTOR 24V DC
22	Z0090002222NA	MOTOR UPPER CASE RAL9005
23	Z0090002223NA	MOTOR LOWER CASE RAL9005
24	Z0090002224	FEMALE CONNECTOR SHAFT
25	Z0090002255AN	PULLEY
26	VIT0006703	CLAMP
27	Z0090002226	SPACER
28	Z0090002258	BELT
29	VIT0009324	BEARING
30	VIT0009320	BEARING
31	VIT0000017	SCREW HEAD TAP CAP M5X20
32	VIT0003104	SPRING WASHER 5,3
33	VIT0002469	SCREW HEAD TAP M3.5X10
34	VIT0002014	SCREW ST HEAD CAP M2.9X13
35	Z0090002240	MOTOR SPACER
36	Z0090002235CK	MR GV BOARD COVER R.7037
37	GUA0010501	ELECTRICAL GROMMET DG 7,5
38	VIT0000015	SCREW HEAD TAP CAP M4X25
39	VIT0004815	NUT M4
40	VIT0002401	SCREW ST HEAD CAP M3.5X9.5
41		PARTS NO MORE AVAILABLE
100	Z0250014086R2	§WATER INLET PIPE 0,27 mt From pos. 16 to pos. 19
101	Z0090002224R	§ FEMALE CONNECTOR SHAFT From pos.24 to pos.30 excluded pos.28

www.rheavendors.com tel: 0039 02 966 551 fax: 0039 02 96 55 086 email: rheavendors@rheavendors.com exclusive property of rheavendors group

PROFESSIONAL BREWER GROUP D.45

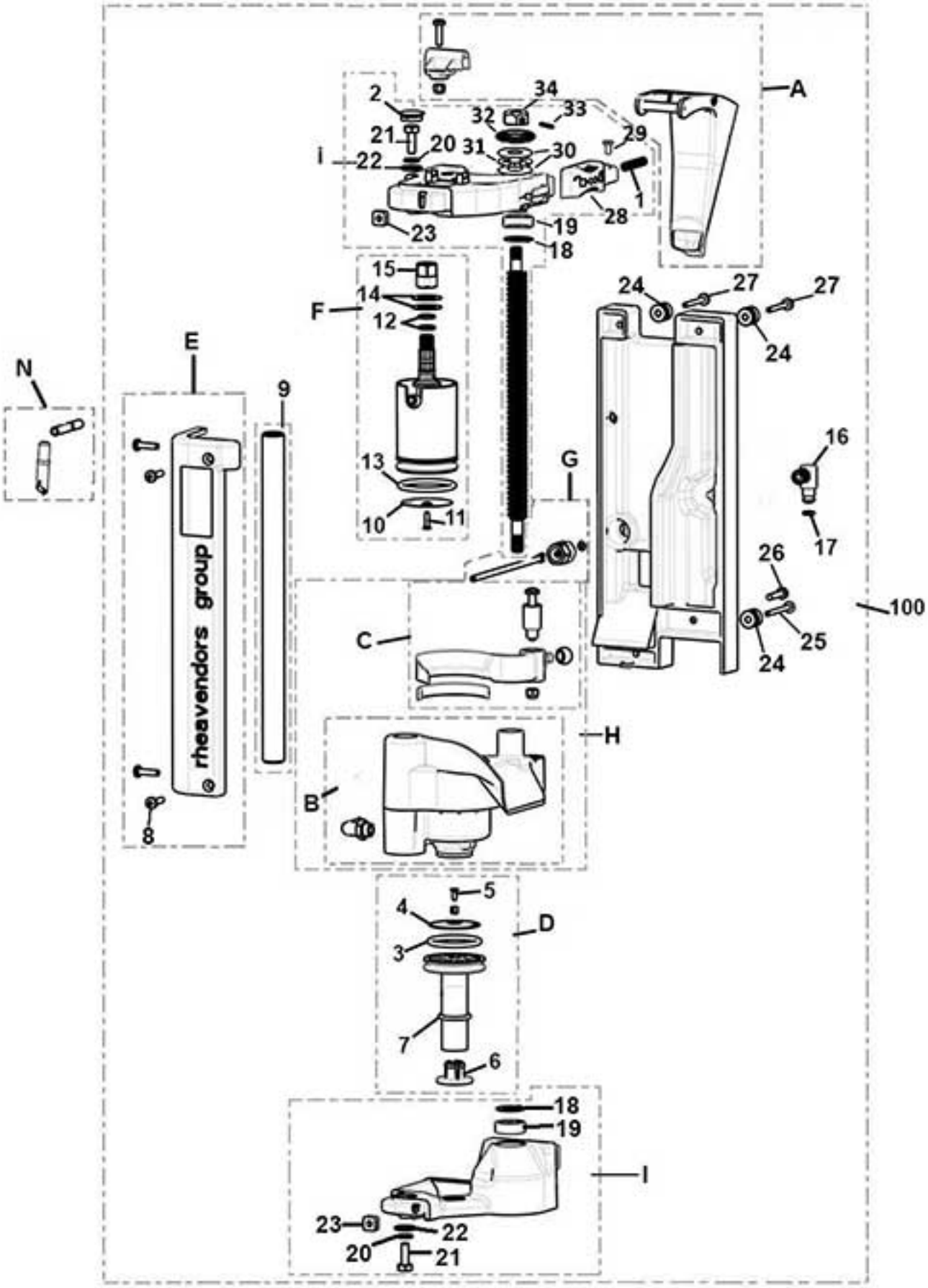

www.rheavendors.com tel: 0039 02 966 551 fax: 0039 02 96 55 086 email: rheavendors@rheavendors.com exclusive property of rheavendors group

PROFESSIONAL BREWER GROUP D.45		
Pos.	**Code**	**Description**
A	Z0250014008R	§ CHUTE D. 45
1	Z0250014081	SPRING
2	GUA0011022	PLUG
B	Z0250014022R	§ INFUSION CHAMBER D.45 included internal components and elbow
C	Z0250014024R	§ BRUSH D.45
D	Z0250014028R	§ LOWER FILTER HOLDER D.45
3	GUA0000097	OR 4131 RED SILICONE LSR70
4	Z0250014029	COFFEE FILTER DIAM. 37.3
5	VIT0000121	SCREW COUNT FLAT HEAD M3X8
6	Z0250014027R1	LOWER PISTON LOCK+SET SCREW
7	GUA0000103	OR 3075 SILICON
E	Z0250014019R	§ FRONTAL COVER
8	VIT0001009	SCREW HEAD TAP CAP M4X16
9	Z0250014013-04	CYLINDRICAL GUIDE
F	Z0250014045R	§ UPPER FILTER HOLDER D.45
10	Z0250008211	COFFEE FILTER 37,3
11	VIT0000129	SCREW COUNT HEAD M3X12
12	GUA0000045	OR 108 VITON 80 BLACK
13	GUA0000067	OR 4143 RED SILICONE LSR70
14	Z0250014048	SPRING
15	Z0250014086	NUT
16	Z0250014085	MALE CONNECTOR
17	GUA0000004	OR 104 NBR AL 75 BLACK
G	Z0250014086R	§ WATER INLET TUBE 0,15 mt
I	Z0250014005R2	§UPPER SUPPORT WITHOUT CHUTE
H	Z0250014020R	§ INFUSION CHAMBER D.45
L	Z0250014012R	§ LOWER SUPPORT
18	Z0250014077	SPACER
19	VIT0009320	BEARING
20	VIT0003113	SPRING WASHER 6,4
21	VIT0000249	SCREW HEX HEAD M6X16
22	Z0250014079	WASHER D.15 D.6,5 SP.1,5
23	VIT0009112	NUT M4
24	Z0250014072	PIN
25	VIT0000033	SCREW HEAD TAP CAP M4X35
26	VIT0001011	SCREW HEAD TAP CAP M4X20
27	VIT0001006	SCREW HEAD TAP CAP M4X30
28	Z0250014082	BREWER STOPPER BUTTON
29	VIT0002009	SCREW ST HEAD CAP M3.5X6.5
30	VIT0009318	SPACER WASHER
31	VIT0009317	BEARING
32	GUA0001007	V RING GASKET VA16
33	VIT0007011	SET SCREW 4X4
34	Z0250014071	NUT M8
N	Z0250008132CL	§ COFFEE OUTLET PIPE
100	Z0250014000CL	COFFEE BREWER VARIFLEX D 45

www.rheavendors.com tel: 0039 02 966 551 fax: 0039 02 96 55 086 email: rheavendors@rheavendors.com exclusive property of rheavendors group

PROFESSIONAL BREWER GROUP D.36

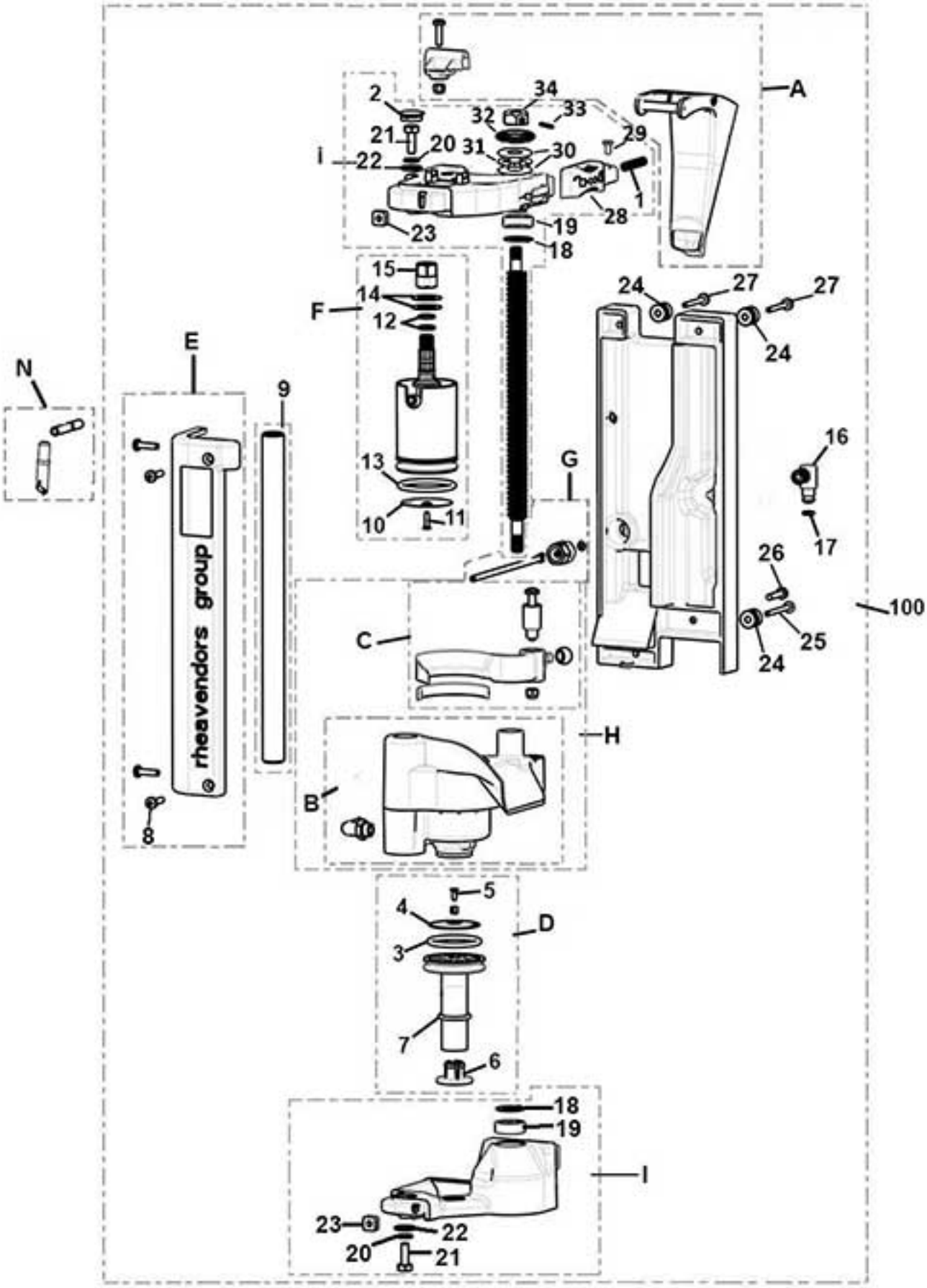

www.rheavendors.com tel: 0039 02 966 551 fax: 0039 02 96 55 086 email: rheavendors@rheavendors.com exclusive property of rheavendors group

PROFESSIONAL BREWER GROUP D.36		
Pos.	**Code**	**Description**
A	Z0250014033R	§ CHUTE D. 36
1	Z0250014081	SPRING
2	GUA0011022	PLUG
B	Z0250014032R	§ INFUSION CHAMBER D.36 included internal components and elbow
C	Z0250014034R	§ BRUSH D.36
D	Z0250014038R	§ LOWER FILTER HOLDER D.36
3	GUA0000080	OR 4112 RED SILICONE LSR70
4	Z0250008019	COFFEE FILTER
5	VIT0000121	SCREW COUNT FLAT HEAD M3X8
6	Z0250014027R1	LOWER PISTON LOCK+SET SCREW
7	GUA0000103	OR 3075 SILICON
E	Z0250014019R	§ FRONTAL COVER
8	VIT0001009	SCREW HEAD TAP CAP M4X16
9	Z0250014013	
F	Z0250014040R	§ UPPER FILTER HOLDER D.36
10	Z0250008099	COFFEE FILTER 33,4
11	VIT0000129	SCREW COUNT HEAD M3X12
12	GUA0000045	OR 108 VITON 80 BLACK
13	GUA0000080	OR 4112 RED SILICONE LSR70
14	Z0250014048	SPRING
15	Z0250014086	NUT
16	Z0250014085	MALE CONNECTOR
17	GUA0000004	OR 104 NBR AL 75 BLACK
G	Z0250014086R	§ WATER INLET TUBE 0,15 mt
H	Z0250014030R	§ CHAMBER D.36
I	Z0250014005R2	§UPPER SUPPORT WITHOUT CHUTE
L	Z0250014012R	§ LOWER SUPPORT
18	Z0250014077	SPACER
19	VIT0009320	BEARING
20	VIT0003113	SPRING WASHER 6,4
21	VIT0000249	SCREW HEX HEAD M6X16
22	Z0250014079	WASHER D.15 D.6,5 SP.1,5
23	VIT0009112	NUT M4
24	Z0250014072	PIN
25	VIT0000033	SCREW HEAD TAP CAP M4X35
26	VIT0001011	SCREW HEAD TAP CAP M4X20
27	VIT0001006	SCREW HEAD TAP CAP M4X30
28	Z0250014082	BREWER STOPPER BUTTON
29	VIT0002009	SCREW ST HEAD CAP M3.5X6.5
30	VIT0009318	SPACER WASHER
31	VIT0009317	BEARING
32	GUA0001007	V RING GASKET VA16
33	VIT0007011	SET SCREW 4X4
34	Z0250014071	NUT M8
N	Z0250008132CL	§ COFFEE OUTLET PIPE
100	Z0250014060CL	§ COFFEE BREWER VARIFLEX D.36

www.rheavendors.com tel: 0039 02 966 551 fax: 0039 02 96 55 086 email: rheavendors@rheavendors.com exclusive property of rheavendors group

horizontal grinder

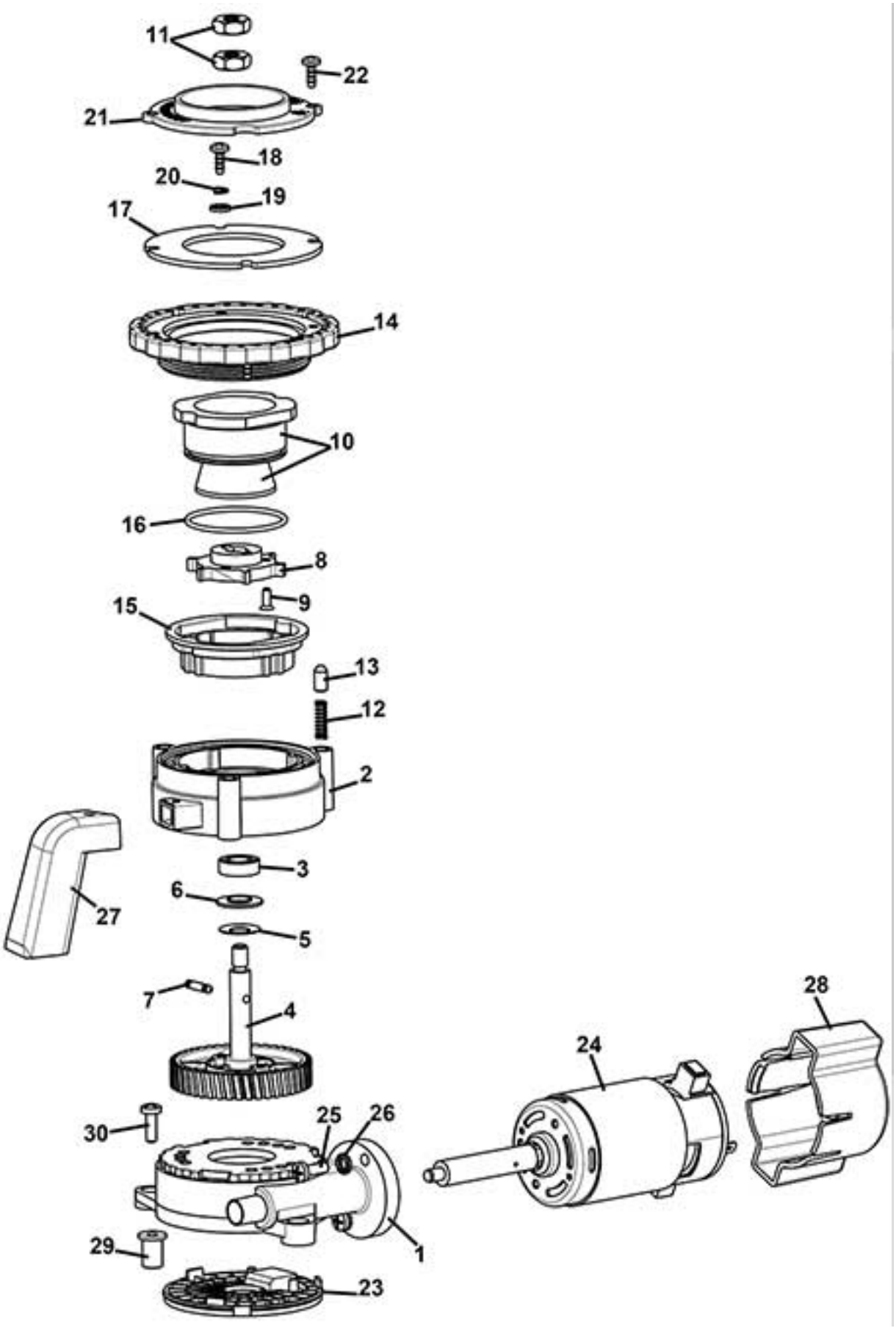

www.rheavendors.com tel: 0039 02 966 551 fax: 0039 02 96 55 086 email: rheavendors@rheavendors.com exclusive property of rheavendors group

horizontal grinder		
Pos.	**Code**	**Description**
1	Z0320001639NAR	§ MOTOR SUPPORT BLACK+PLUG
2	Z0320001602NAR	GRINDER BLADES SUPPORT
3	VIT0009325	BEARING
4	Z0320001608R	§ WHEEL+SHAFT+MAGNETS
5	Z0320001629	CUP SPRING 16x8,2 SP. 0,4
6	Z0320001625	BUSH
7	Z0320001704	GRINDER ROTATION PIN REINFORCE
8	Z0320001636	EJECTOR
9	VIT0000121	SCREW COUNT FLAT HEAD M3X8
10	Z0320001680	CONIC BLADES PLUS
11	Z0320001642	LOWER GRINDER FIXING NUT
12	Z0320001643	SPRING D.4X15X0,6
13	Z0320001624	REGULATION PIN
14	Z0320001605NAR	§ REGULATION RING NUT BLACK
15	Z0320001635-03NA	GRINDER SUPPORT BLACK
16	GUA0000124	SILICONE OR 2137
17	Z0320001622	UPPER GRINDER FIXING
18	VIT0002469	SCREW HEAD TAP M3.5X10
19	Z0320001666	SPACER D.4x7x2
20	VIT0003103	SPRING WASHER 4,3
21	Z0320001607NA	DUCT BLACK
22	VIT0002469	SCREW HEAD TAP M3.5X10
23	Z0320001604NA	PLUG BLACK
24	Z0090003047	GRINDER MOTOR 230V DC
25	VIT0000013	SCREW HEAD TAP CAP M4X12
26	VIT0003103	SPRING WASHER 4,3
27	Z0320001612NA	COFFEE POWDER CHUTE BLACK
28	Z0320001615NA	GRINDER SENSOR COVER BLACK
29	Z0320001628	NO-VIBRATION BUSH
30	VIT0000013	SCREW HEAD TAP CAP M4X12
100	Z0320001600CLAL	§ GRINDER PLUS-VARIFLEX BREWER

www.rheavendors.com tel: 0039 02 966 551 fax: 0039 02 96 55 086 email: rheavendors@rheavendors.com exclusive property of rheavendors group

products container

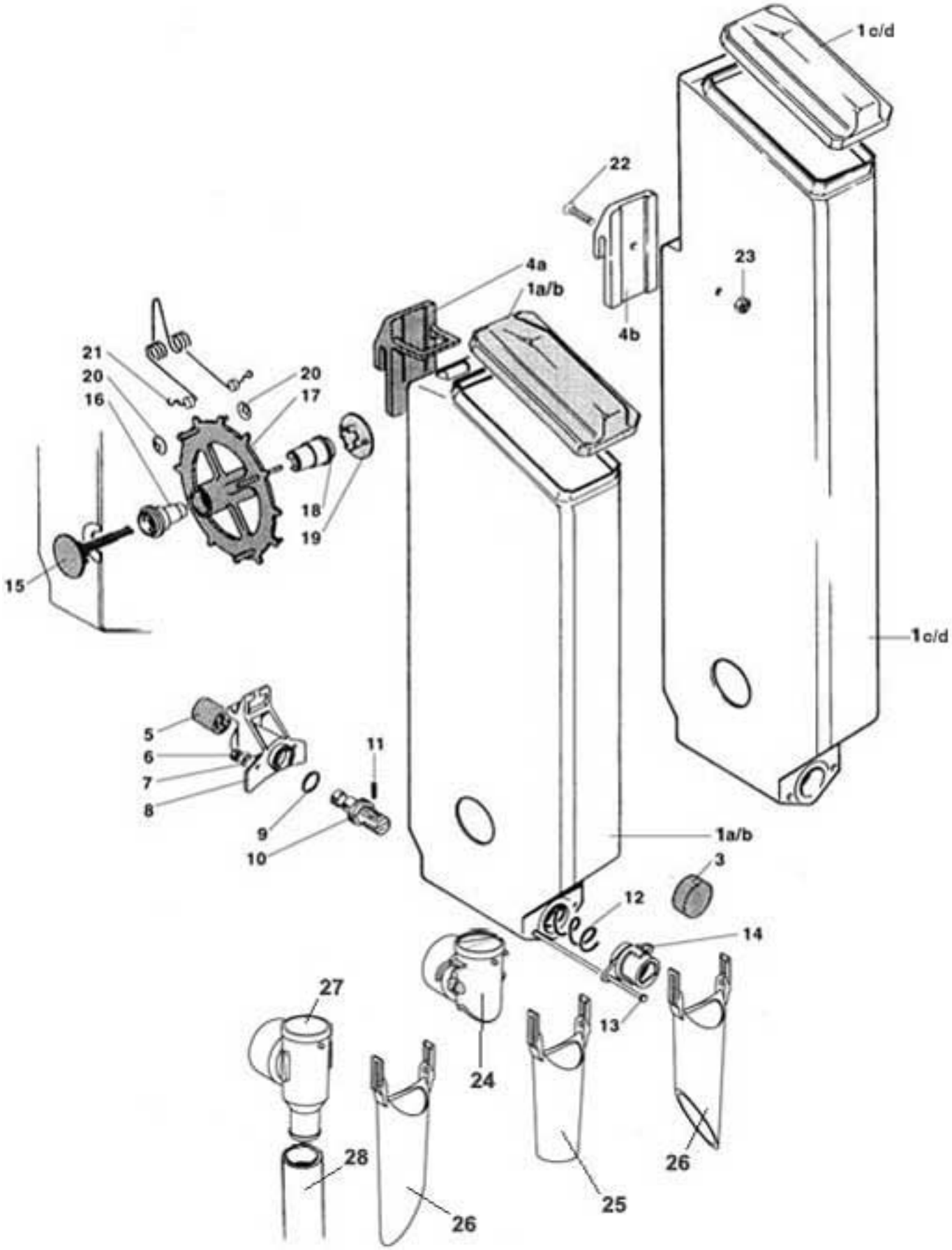

www.rheavendors.com tel: 0039 02 966 551 fax: 0039 02 96 55 086 email: rheavendors@rheavendors.com exclusive property of rheavendors group

products container		
Pos.	**Code**	**Description**
1/a	70003001AR	§ CANISTER "A"+LID
1/b	70003001BR	§ CANISTER "B"+LID
1/c	Z0230008003AR	§ CANISTER W/HOLE H.650+LID
1/d	Z0230008003BR	§ CANISTER W/O HOLE H.650+LID
3	4002050109AD	INGREDIENT CHUTE PLUG
4/a	70003003	FIX PLATE
4/b	Z0230012018	FIX PLATE
5	Z0230012012	SQUARED PINION
6	VIT0004803	NUT M4
7	VIT0003202	WASHER 4,3X9X0,8
8	70003006	REAR BUSH
9	GUA0000015	OR 119 NBR AL 75 BLACK
10	Z0230012006	SPIRAL WITH FLANGE
11	VIT0005106	PIN 2X14
12/a	70003016	SPIRAL 18
12/b	Z0230024009	SPIRAL 9
13	70003010	BUSH CONNECTOR
14/a	70003008	FRONT BUSH
14/b	70003007	FRONT BUSH
14/c	Z0230012025	FRONT BUSH-REDUCED TRANSITION
15	70003028	PIN
16	70003027	BUSH
17	70003012	WHEEL (PLASTIC)
18	70003026	BUSH
19	70003029	DISK
20	VIT0007102	BENZING CLIP
21	11837	PRODUCT AGITATOR
22	VIT0001205	SCREW COUNT FLAT HEAD M4X12
23	VIT0004810	NUT M4
24	Z0230030302IC	INGRED.CHUTE CONNECTOR RAL2011
25	Z0232300041R3	§INGREDIENT CHUTE-FRONTAL
26/a	Z0230030304R3	§ INGREDIENT CHUTE-LEFT ORANGE
26/b	Z0230030305R3	§ INGRED. CHUTE-RIGHT ORANGE
27	Z0230016024	SUGAR CHUTE
28/a	TSIL15/19T-10	SILICON HOSE 15X19 MT.10
100	Z0230016005R	§ CANISTER SPIRAL 18
101	Z0230017007R	§ CANISTER WHEEL 9
102	Z0230017008R	§ CANISTER WHEEL 18
103	Z0230018009R	§ CANISTER AGITATOR 18
104	Z0230019005R	§ CANISTER AGITATOR 9-THE
105	Z0230019006R	§ CANISTER AGITATOR 18-THE
106	Z0230012012R	§ SQUARED PINION

www.rheavendors.com tel: 0039 02 966 551 fax: 0039 02 96 55 086 email: rheavendors@rheavendors.com exclusive property of rheavendors group

MIX products container

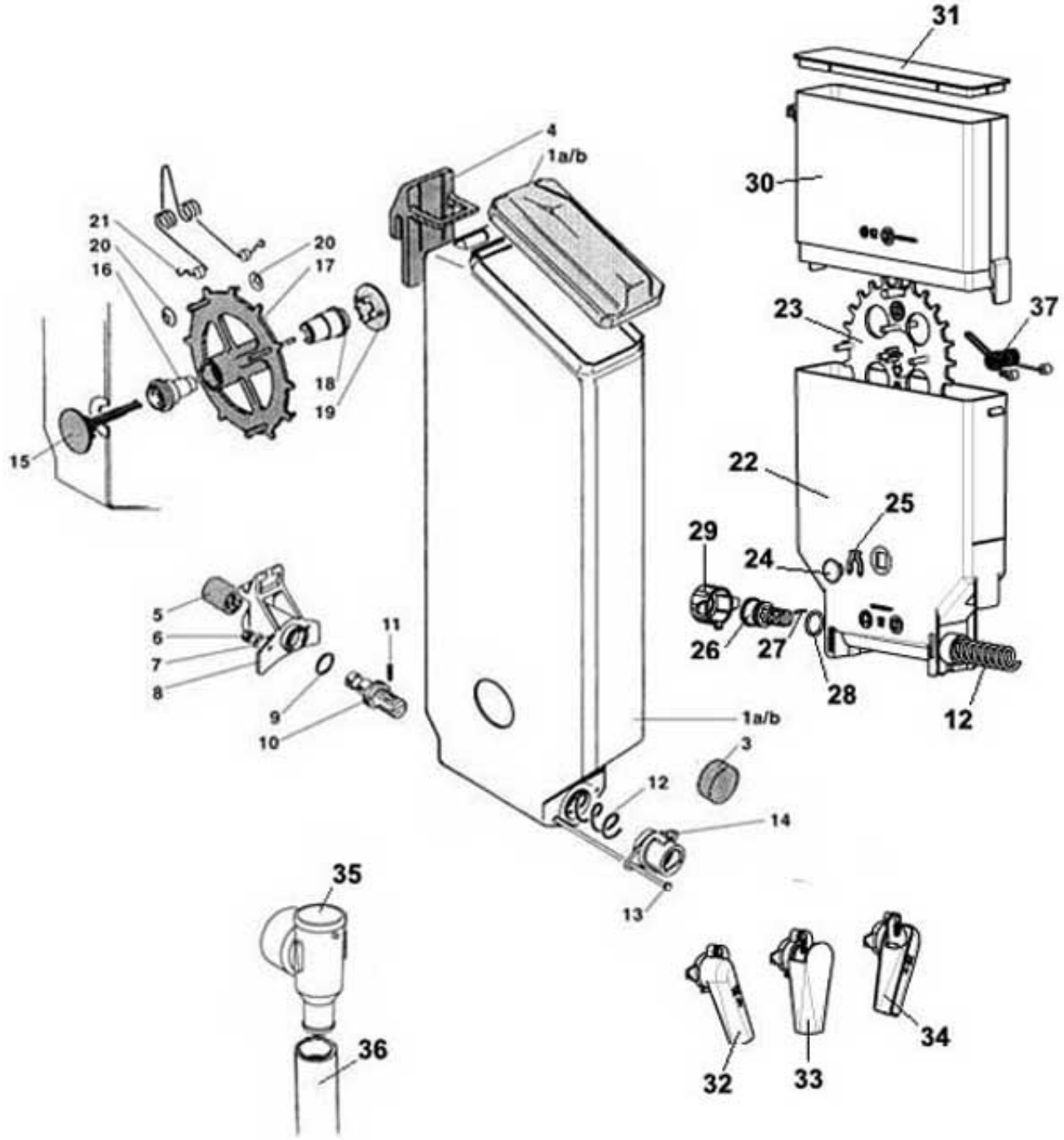

www.rheavendors.com tel: 0039 02 966 551 fax: 0039 02 96 55 086 email: rheavendors@rheavendors.com exclusive property of rheavendors group

MIX products container		
Pos.	**Code**	**Description**
1/a	70003001AR	§ CANISTER "A"+LID
1/b	70003001BR	§ CANISTER "B"+LID
3	70003061	SUGAR CHUTE PLUG
4	70003003	FIX PLATE
5	Z0230012012	SQUARED PINION
6	VIT0004803	NUT M4
7	VIT0003202	WASHER 4,3X9X0,8
8	70003006	REAR BUSH
9	GUA0000015	OR 119 NBR AL 75 BLACK
10	Z0230012006	SPIRAL WITH FLANGE
11	VIT0005106	PIN 2X14
12/a	70003016	SPIRAL 18
12/b	Z0230024009	SPIRAL 9
12/c	Z0230030013	SPIRAL 9
13	70003010	BUSH CONNECTOR
14/a	70003007	FRONT BUSH
14/b	70003008	FRONT BUSH
14/c	Z0230012025	FRONT BUSH-REDUCED TRANSITION
15	70003028	PIN
16	70003027	BUSH
17	70003012	WHEEL (PLASTIC)
18	70003026	BUSH
19	70003029	DISK
20	VIT0007102	BENZING CLIP
21	11837	PRODUCT AGITATOR
22	Z0230030233	INGREDIENT CANISTER 54 265
23	Z0230030236AB	§ WHEEL MM54
24	Z0230030238-02	WHEEL PIN
25	Z0230030239	WHEEL PIN FORK
26	Z0230030012	SPIRAL PIN
27	VIT0005106	PIN 2X14
28	GUA0000083	OR 123 RED SILICONE A70
29	Z0230030011	REAR BUSH
30	Z0230030274	CANISTER EXTENSION
31	Z0230030006	CANISTER 55 LID
32/a	Z0230030187R	§ INGREDIENT CHUTE-RIGHT RED
32/b	4001003072/28R1	§ INGRED CHUTE-RIGHT 125MM
32/c	Z0230030304R3	§ INGREDIENT CHUTE-LEFT ORANGE
32/d	Z0230030198R	§ INGRED. CHUTE-RIGHT ORANGE
33/a	Z0230030199R	§ INGRED. CHUTE-FRONTALORANGE
33/b	Z0232300041R3	§INGREDIENT CHUTE-FRONTAL
34/a	Z0230030197R	§ INGREDIENT CHUTE-LEFT ORANGE
34/b	4001003072/27R1	§INGREDIENT CHUTE -LEFT MM.125
34/c	Z0230030305R3	§ INGRED. CHUTE-RIGHT ORANGE
34/d	Z0230030186R	§ INGREDIENT CHUTE-LEFT RED
35	Z0230016024	SUGAR CHUTE
36/a	TSIL15/19T-10	SILICON HOSE 15X19 MT.10

www.rheavendors.com tel: 0039 02 966 551 fax: 0039 02 96 55 086 email: rheavendors@rheavendors.com exclusive property of rheavendors group

MIX products container		
37	Z0230030060-05	PRODUCT AGITATOR
100	Z0230017012CL	§ CANISTER WHEEL 18
101	Z0230018012CL	PRD. CON. MIXER 18
102	Z0230016005R	§ CANISTER SPIRAL 18
103	Z0230018009R	§ CANISTER AGITATOR 18
104	Z0230017008R	§ CANISTER WHEEL 18
105	Z0230030253R	§ CANIS. 54-265 AGIT.9 W/LID
106	Z0230030276R	§ CANIS. 54-265 SPIRAL9 W/LID
107	Z0230030275R	§ CANIS. 54-265 WHEEL9 W/LID
107	Z0230030280R1	PRD. CON.54H265 MIXER 18
108	Z0230030280R	PRD. CON.54H265 MIXER 18
109	Z0230030277R1	PRD. CON.54H265 WHEEL 18
110	Z0230030275R1	PRD. CON.54H265 WHEEL 9
111	Z0230030262CL	PRD. CON.110H265 MIXER 18-LEFT

www.rheavendors.com tel: 0039 02 966 551 fax: 0039 02 96 55 086 email: rheavendors@rheavendors.com exclusive property of rheavendors group

1 grinder coffee beans container

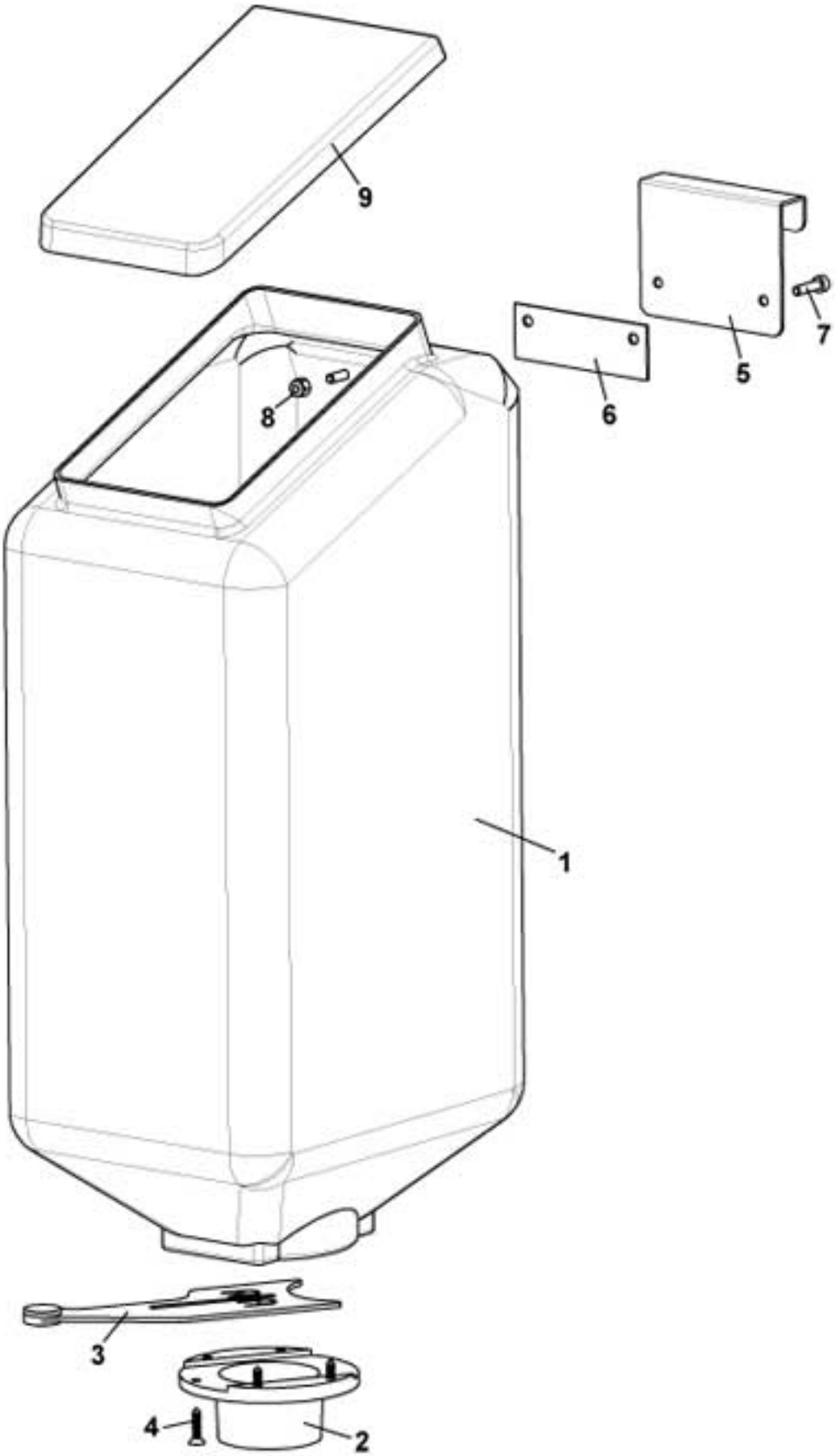

www.rheavendors.com tel: 0039 02 966 551 fax: 0039 02 96 55 086 email: rheavendors@rheavendors.com exclusive property of rheavendors group

1 grinder coffee beans container		
Pos.	**Code**	**Description**
1	Z0230030481R	§ COFFEE BEANS HOPPER 6KG pos. 1 + 9
2	Z0230030449NA	COFFEE BEANS HOPPER STOPPER
3	Z0230015207IC	COFFEE BEANS HOPPER STOPPER
4	VIT0002104	SCREW COUNT FLAT HEAD M3.9X16
5	Z0230030429	COFFEE CONTAINER CONNECTION
6	Z0230030426	PLATE
7	VIT0005519	SCREW TCEI 4x12 STAIL STEEL
8	VIT0004810	NUT M4
9	Z0230015057	COFFEE BEANS HOPPER LID
100	Z0230030415R7	§ COFFEE BEANS HOPPER 6 KG

www.rheavendors.com tel: 0039 02 966 551 fax: 0039 02 96 55 086 email: rheavendors@rheavendors.com exclusive property of rheavendors group

2 grinders coffee beans container

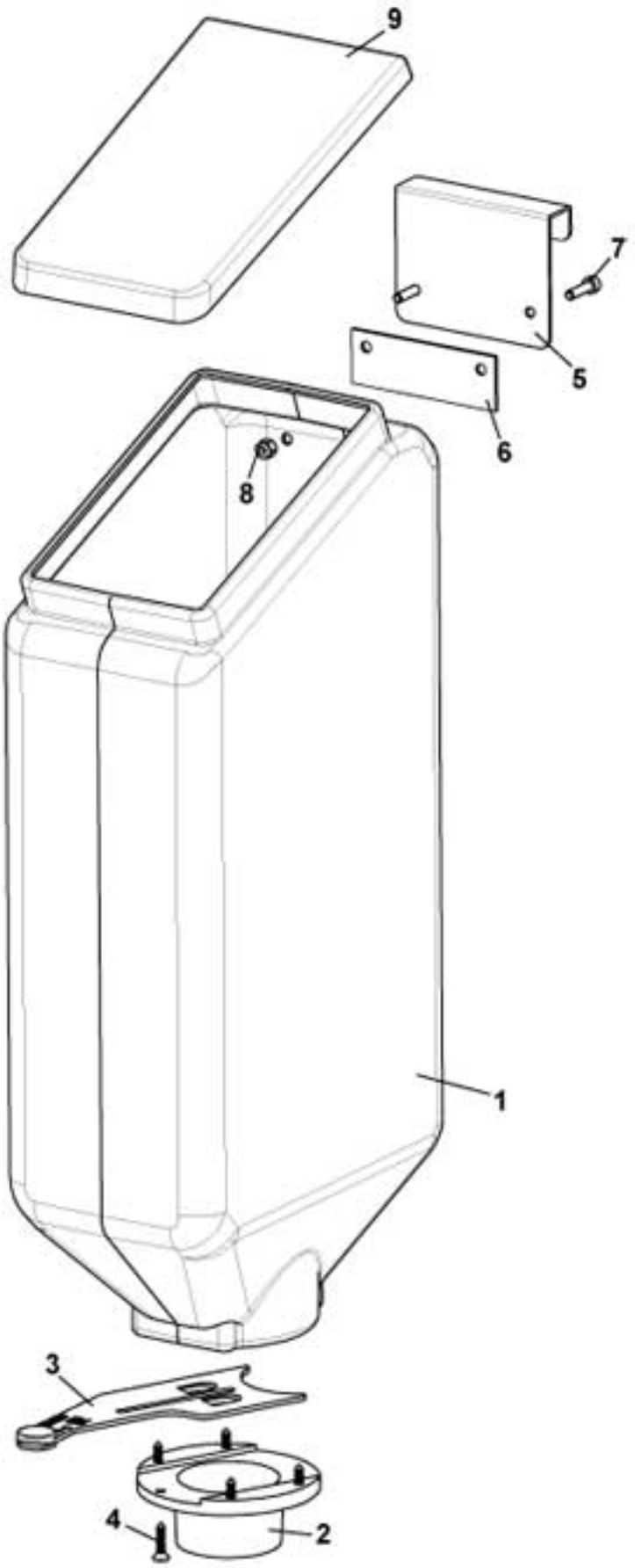

www.rheavendors.com tel: 0039 02 966 551 fax: 0039 02 96 55 086 email: rheavendors@rheavendors.com exclusive property of rheavendors group

2 grinders coffee beans container		
Pos.	**Code**	**Description**
1/a	Z0230030442	COFFEE BEANS HOPPER 2 GRINDER
1/b	Z0230030405	COFFEE BEANS HOPPER 2 GRINDER
2	Z0230015066NA	COFFEE BEANS HOPPER STOPPER
3	Z0230015207IC	COFFEE BEANS HOPPER STOPPER
4	VIT0002104	SCREW COUNT FLAT HEAD M3.9X16
5	Z0230030463	COFFEE BEANS HOP. FIXING PLATE
6	Z0230030426	PLATE
7	VIT0005519	SCREW TCEI 4x12 STAIL STEEL
8	VIT0004810	NUT M4
9	Z0230015057	COFFEE BEANS HOPPER LID

www.rheavendors.com tel: 0039 02 966 551 fax: 0039 02 96 55 086 email: rheavendors@rheavendors.com exclusive property of rheavendors group

control panel

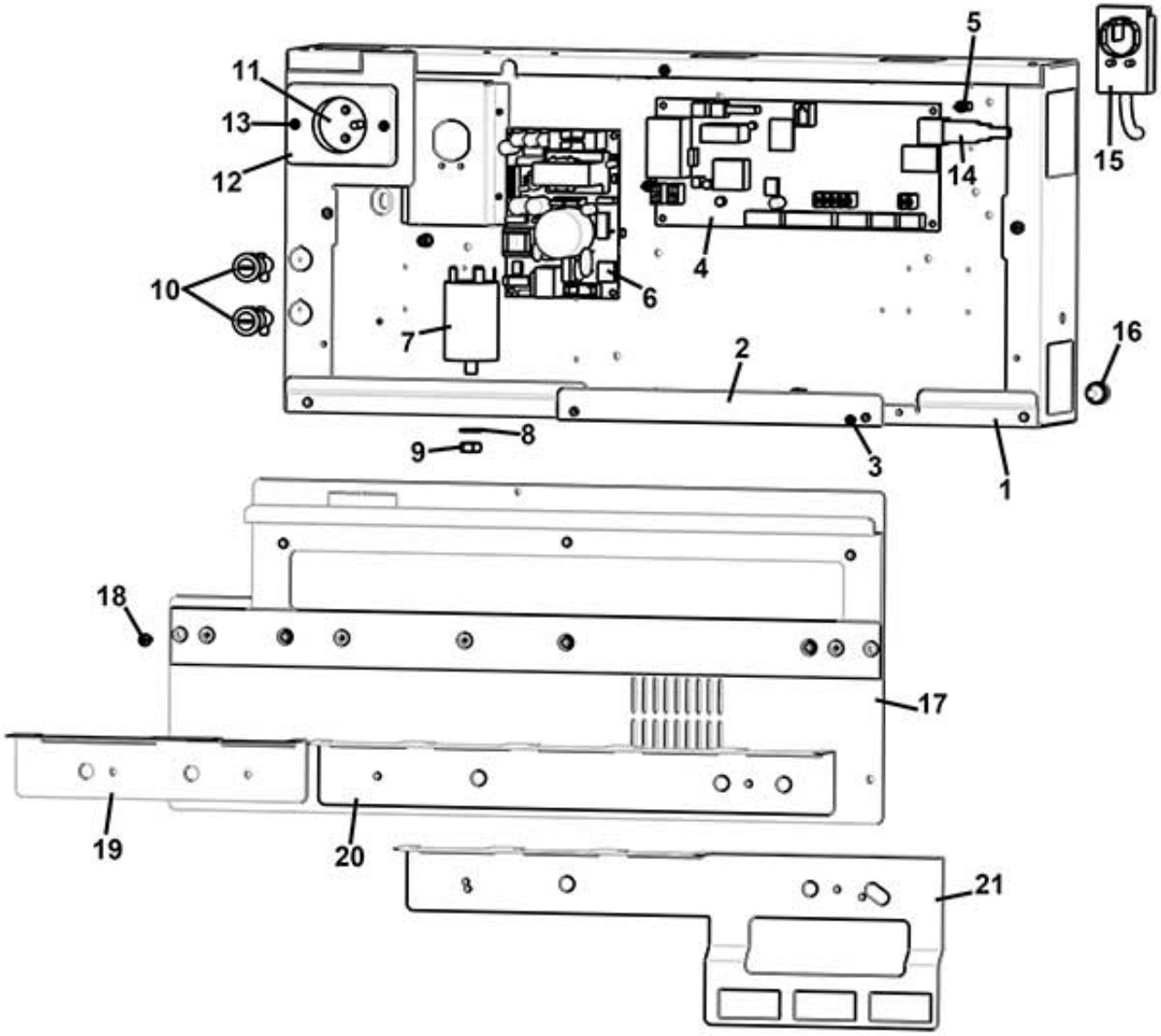

www.rheavendors.com tel: 0039 02 966 551 fax: 0039 02 96 55 086 email: rheavendors@rheavendors.com exclusive property of rheavendors group

control panel		
Pos.	**Code**	**Description**
1	Z013A003025-01	ELECTRIC PANEL
2	Z013A003032	STOPPER COVER
3	VIT0000003	SCREW HEAD TAP CAP M3X8
4	BRD03003	POWER BOARD
5	ELE0062003	BOARD SUPPORT
6	SCHA161001	SWITCHING BOARD
7	ELE0009055	NOISE FILTER 16A
8	VIT0003106	WASHER D.8,2
9	VIT0004506	NUT M8
10	ELE0003507CL	FUSE HOLDER+FUSE 12A
11	ELE0002306	GW PLUG
12	ELE0002307	ELECTRIC SOCKET 2 POSITION
13	VIT0002004	SCREW ST HEAD CAP M3.5X13
14	ELT0030874	USB WIRING 1,5MT
15	ELE0055003CL	SUPPLY CABLE
16	GUA0011016	RUBBER FEET D.15 H 8,5
17	Z013A003009CL	§ELECTRIC PANEL PROTECTION
18	VIT0000012	SCREW HEAD TAP CAP M4X10
19	Z013A003016	INGREDIENT CANISTER SUPP. E 1M
20	Z013A003015	INGREDIENT CANISTER SUPPORT H5
21	Z013A003031	INGREDIENT CANISTER SUPPORT

www.rheavendors.com tel: 0039 02 966 551 fax: 0039 02 96 55 086 email: rheavendors@rheavendors.com exclusive property of rheavendors group