vending machine

spare parts manual

www.rheavendors.com tel: 0039 02 966 551 fax: 0039 02 96 55 086 email: rheavendors@rheavendors.com exclusive property of rheavendors group

cabinet

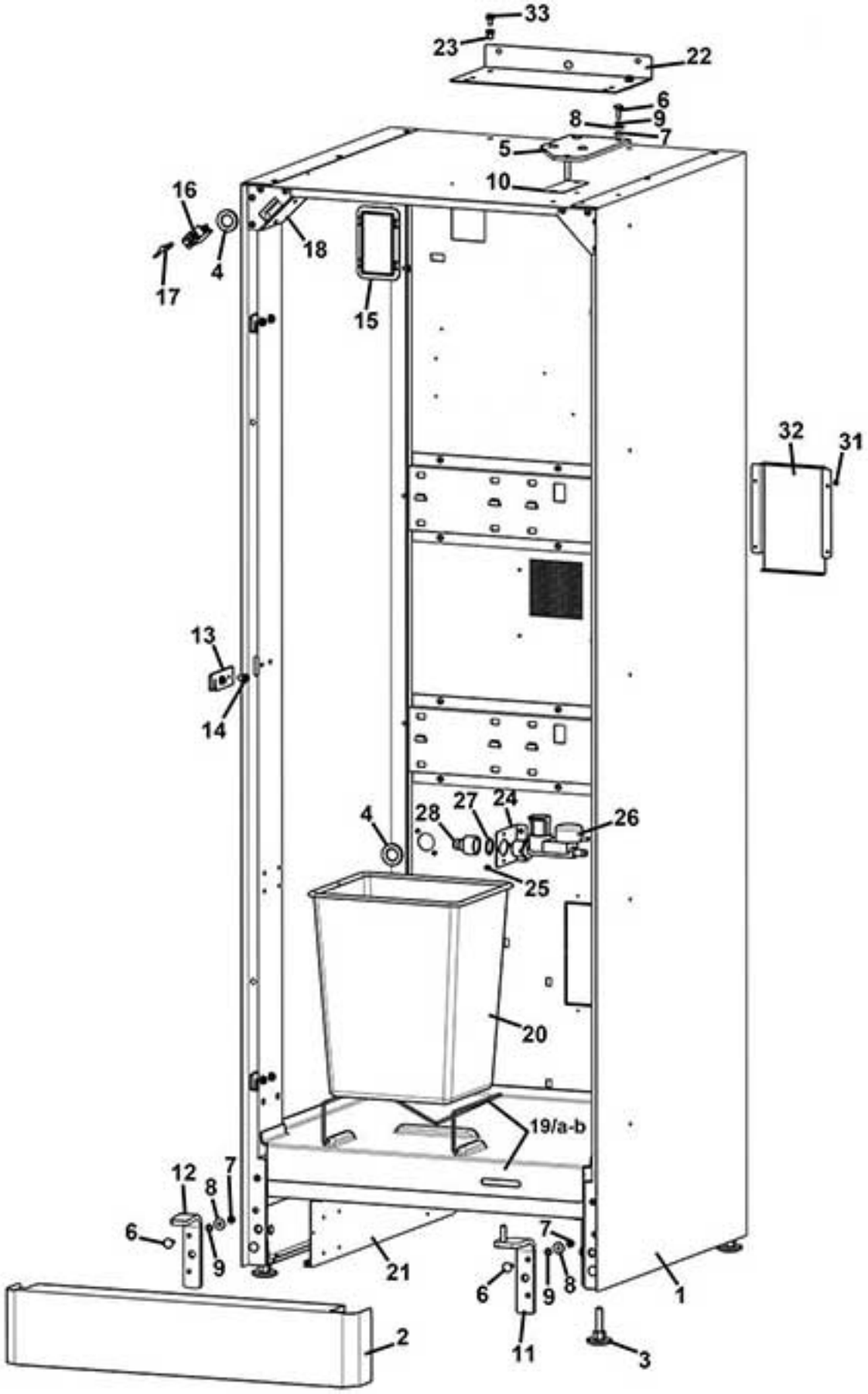

www.rheavendors.com tel: 0039 02 966 551 fax: 0039 02 96 55 086 email: rheavendors@rheavendors.com exclusive property of rheavendors group

cabinet		
Pos.	**Code**	**Description**
1	Z001A113001NAR	CABINET LUCE ZERO 9005+PACK
2	Z001A003029NA	FEET COVER RAL 9005
3	Z0010013208	MACHINE FOOT
4	GUA0010502	ELECTRICAL GROMMET Ø21
5	Z0010030028	UPPER HINGE
6	VIT0005802	SCREW 6X20
7	VIT0004505	NUT M6
8	VIT0003303	WASHER 6,6X18X1,5
9	VIT0003453	SPRING WASHER 6,4
10	Z0010030042	THICKNESS HINGE
11	Z0010030029	LOWER HINGE
12	Z0010030031	MACHINE FOOT
13	Z0010030015	LOCK HOOK
14	VIT0000236	SCREW HEX HEAD M6X11
15	Z0010030054NA	WIRING SUPPLY COVER (BLACK)
16	ELE0002009	BIPOLAR SWITCH 15A 250V
17	Z0270011109CL	§ SERVICE KEY
18	Z0010030075	DOOR SWITCH SUPPORT
19/a	Z0010030049	BIN FRAME
19/b	Z0010032019NA	BOTTOM PROTECTION (BLACK)
20	CON0000201	BIN
21	Z0010030077	CABINET REINFORCEMENT
22	Z0010018071	MACHINE FIXING PLATE
23	VIT0005702	THREADED INSERT
24	Z0070012111CK	INLET H2O VALVE SUP. RAL7037
25	VIT0002010	SCREW ST HEAD CAP M3.5X9.5
26	Z0110001119	WATER INLET VALVE 24V DC
27	GUA0000021	OR 130 NBR AL 75 BLACK
28	Z0010019223	H2O INLET CONNECTOR 3/4F-3/8M
31	VIT0002009	SCREW ST HEAD CAP M3.5X6.5
32	Z0012300244NA	COVER BACK
33	Z0010030084	PIN

www.rheavendors.com tel: 0039 02 966 551 fax: 0039 02 96 55 086 email: rheavendors@rheavendors.com exclusive property of rheavendors group

external door

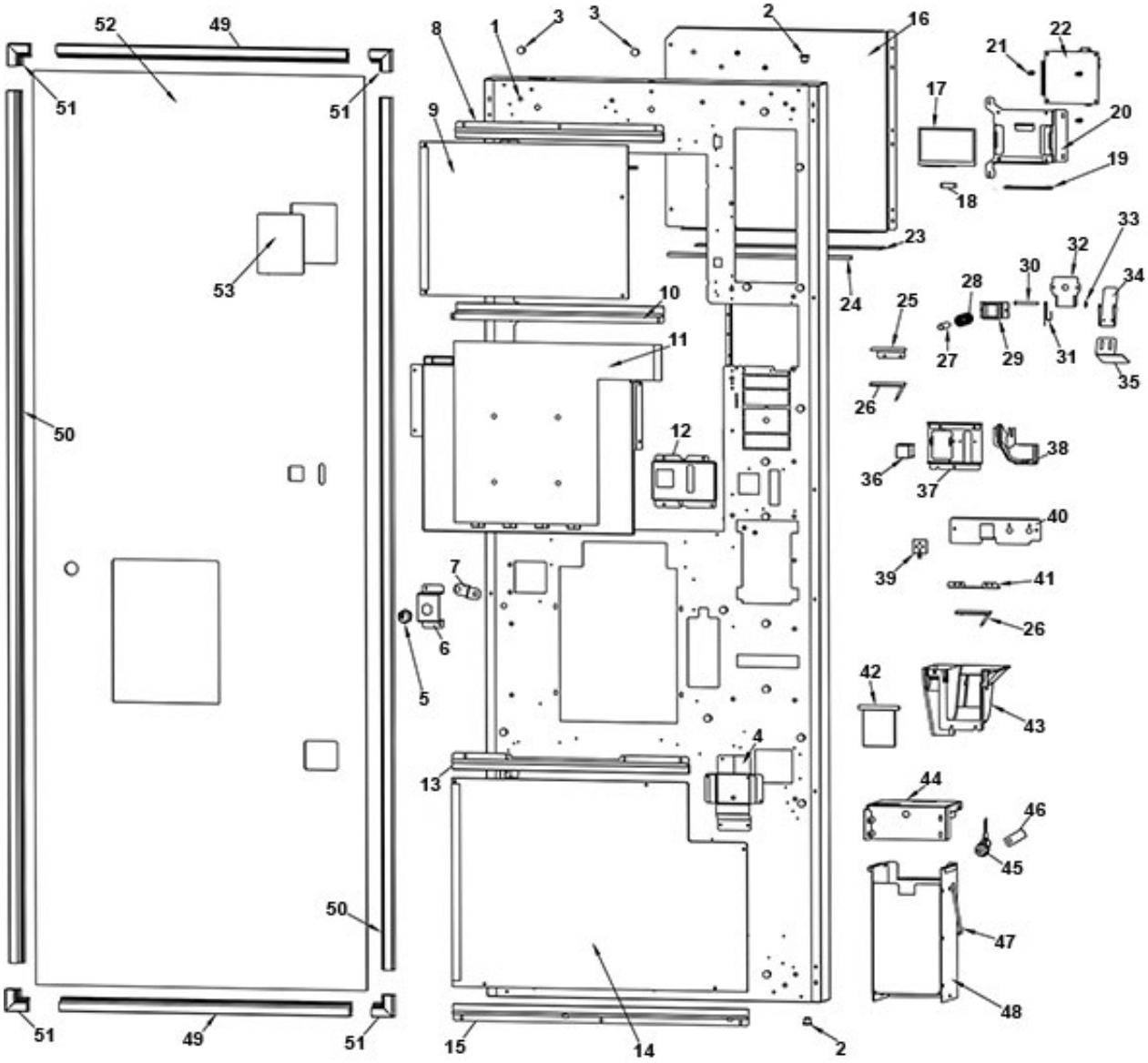

www.rheavendors.com tel: 0039 02 966 551 fax: 0039 02 96 55 086 email: rheavendors@rheavendors.com exclusive property of rheavendors group

external door		
Pos.	**Code**	**Description**
1	Z002A113201NA-04	DOOR RAL 9005
2	Z0020034156	DOOR HINGE BUSH
3	GUA0011030	FOOT PUSH ON BLACK
4	Z002A003026NA	COIN OUTLET PROTECTION
5/a	SER0000001/1	INOX LOCK C6802
5/b	SER0000023	LOCK RIELDA
6	Z002A003039NA	LOCK SUPPORT
7	Z0020054072	LOCK BRACKET
8	Z002A003123NA	UPPER BACK LIGHT GUIDE 9005
9	Z0020054090	UPPER BACK LIGHT
10	Z002A003124NA	LOWER BACK LIGHT GUIDE 9005
11		See table KEYPAD
12	Z002A003125	INSERT COIN REINFORCEMENT
13	Z002A003122NA	UPPER GUIDE BACK LIGHT 9005
14	Z0020054106	LOWER BACK LIGHT
15	Z002A003121NA	LOWER BACK LIGHT GUIDE 9005
16	Z0020054009	UPPER COVER DOOR
17	ELT0030426	LCD TFT 4,3
18	ELT0030937	FLAT FERRITE
19	Z002A003023	FLAT COVER
20	Z002A003024	DISPLAY SUPPORT
21	ELE0062003	BOARD SUPPORT
22	SCH0009801	TFT4,3+CAPACITIVE GPU
23	Z002A003108	HORIZONTAL CONTRAST PANEL
24	Z002A003109	CONTRAST GASKET
25	Z002A003051	INSERT COINS LED BOARD SUPPORT
26	Z0020055172	LED LIGHTING SYSTEM INCOME COI
27	Z0020034023	COIN RETURN PIN
28	4050010074	COIN RETURN BUTTON SPRING
29	4050010071NA	COINS RETURN BUTTON SUPP.BLACK
30	Z0020034173	DOOR STOP IN
31	Z0020005013	COIN REJECT BUTTON SPRING
32	Z0020042064	COIN RETURN BUTTON PLATE
33	VIT0007102	BENZING CLIP
34	Z0020042057	UPPER BRACKET
35	Z0020042052	LOWER BRACKET
36	4050010072XC	COIN RETURN BUTTON CHROMO
37	Z0020054139	PLATE COINS INTRODUCTION
38	Z0020055187	COINS SLIDE
39	Z002A003032	WHITE LIGHT LOGO BOARD
40	Z002A003038	SENSORS AND LEDS SUPPORT
41	Z0020042972	LIGHT CHANGE GIVER SUPPORT
42	Z0020038144XC	COINS RETURN FLAP CHROME
43	Z0020042014CY	COINS RETURN CHUTE RAL9018
44	Z0020042095	COIN BOX LID
45	SER0000001/1	INOX LOCK C6802
46	SER0001005	LOCK PLATE

www.rheavendors.com tel: 0039 02 966 551 fax: 0039 02 96 55 086 email: rheavendors@rheavendors.com exclusive property of rheavendors group

external door		
47	Z0030006258	COIN BOX HOOK
48	Z0030006255CL0	§COIN BOX Include cod.Z0030006258 HOOK
49	Z0020054097NA	HORIZONTAL FRAME 9005
50	Z0020054098NA	VERTICAL PROFILE 9005
51	Z0020054095NA	CORNER PROFILE 9005
52		Please be so kind to specify the panel desired
53		Please be so kind to specify the panel desired

www.rheavendors.com tel: 0039 02 966 551 fax: 0039 02 96 55 086 email: rheavendors@rheavendors.com exclusive property of rheavendors group

internal door

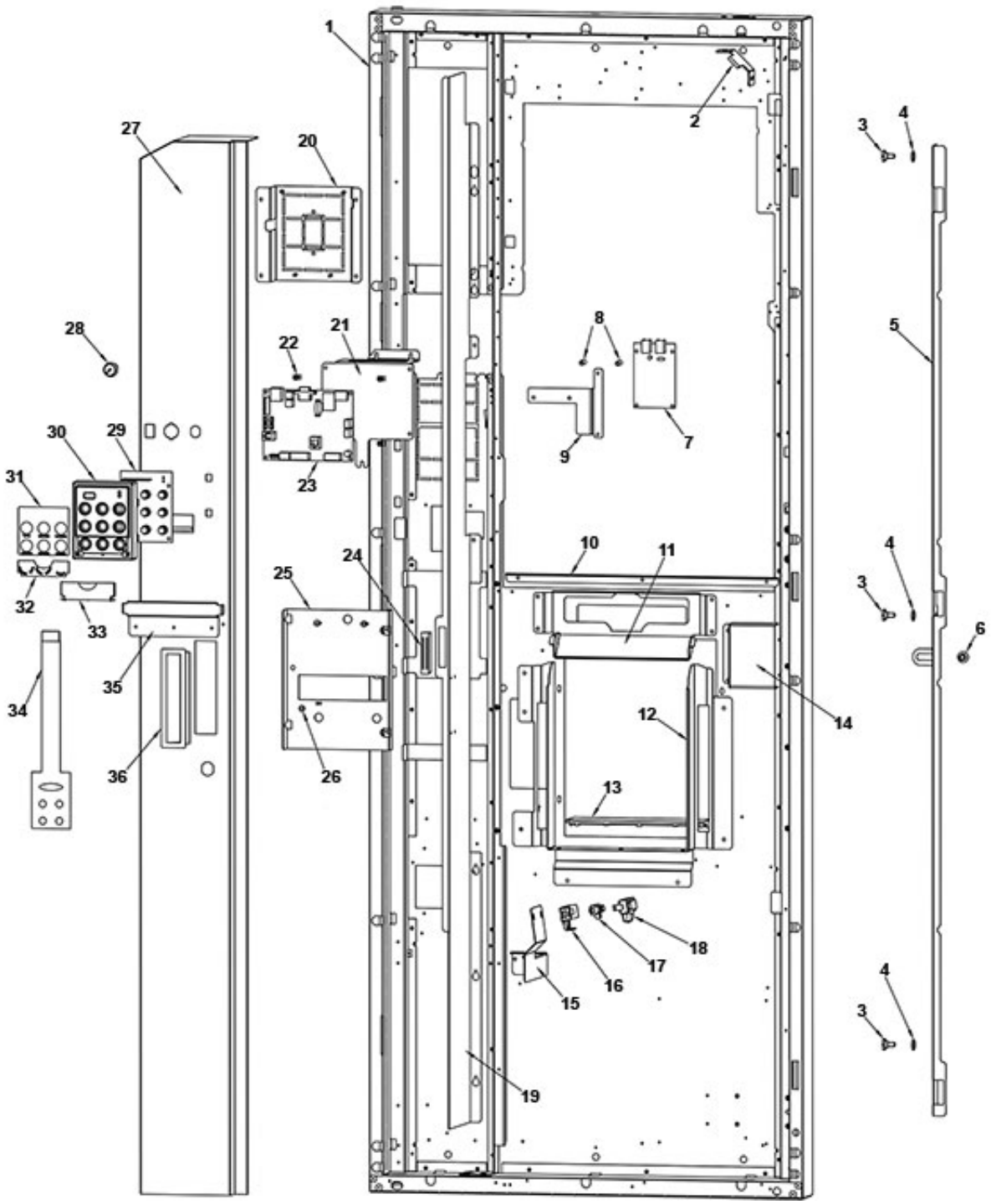

www.rheavendors.com tel: 0039 02 966 551 fax: 0039 02 96 55 086 email: rheavendors@rheavendors.com exclusive property of rheavendors group

internal door		
Pos.	**Code**	**Description**
1	Z002A113201NA-04	DOOR RAL 9005
2	Z0020042162	DOOR SWITCH SUPPORT
3	Z0020029923	FIXING SCREW
4	Z002A021042	BEARING SPACER
5	Z002A003085	ROD LOCK
6	Z002A003017	LOCK ROD BUSHING
7	SCH0006261	RFID CARD READER_1
8	H00040083	NYLON SPACER 3,7X6,4 H.17,5
9	Z002A087045	RFID SUPPORT
10	Z002A003110	BAR DOOR
11	Z002A003035NA	CUP STATION COVER BLACK
12	Z002A003134NA	STATION FRAME GLASSES 9005
13	Z0020054112NA	SHELF CUP STATION
14	Z002A003073	LOCK PROTECTION
15	Z002A003061	CUP SENSOR SUPPORT 1T
16	Z0020040671	CUP SENSOR LOWER COVER
17	ELT0006813	DISTANCE SENSOR
18	Z0020040672	CUP SENSOR UPPER COVER
19	Z0020054046	COIN MECH. COVER
20	Z002A003083	PAYMENT SYSTEM PLATE
21	Z002A003081	CPU SUPPORT
22	ELE0062003	BOARD SUPPORT
23	SCH0007904	CPU BOARD (2017)
24	ELE0000103	MAGNETIC CLICK-LOCK
25	Z0020054048	CHANGEGIVER SUPPORT
26	4060010126	PAYM SYSTEM FIXING SCREW
27	Z0020054045	COIN MECH. COVER 5T
28	ELE0002018	KEY SWITCH
29	SCH0007182	PROGRAM KEYPAD
30	Z0020042172AH	PROGRAM KEYPAD SUPPORT
31	Z0020042165	CLEANING LABEL
32	Z0020042164	PROGRAMM LABEL
33	Z0020042171	KEYBOARD COVER
34	Z0020038124	PROGRAMMING KEYPAD
35	Z0020042142	INGREDIENT CANISTER SUPPORT
36	Z0020034823	HANDLE

www.rheavendors.com tel: 0039 02 966 551 fax: 0039 02 96 55 086 email: rheavendors@rheavendors.com exclusive property of rheavendors group

KEYPAD

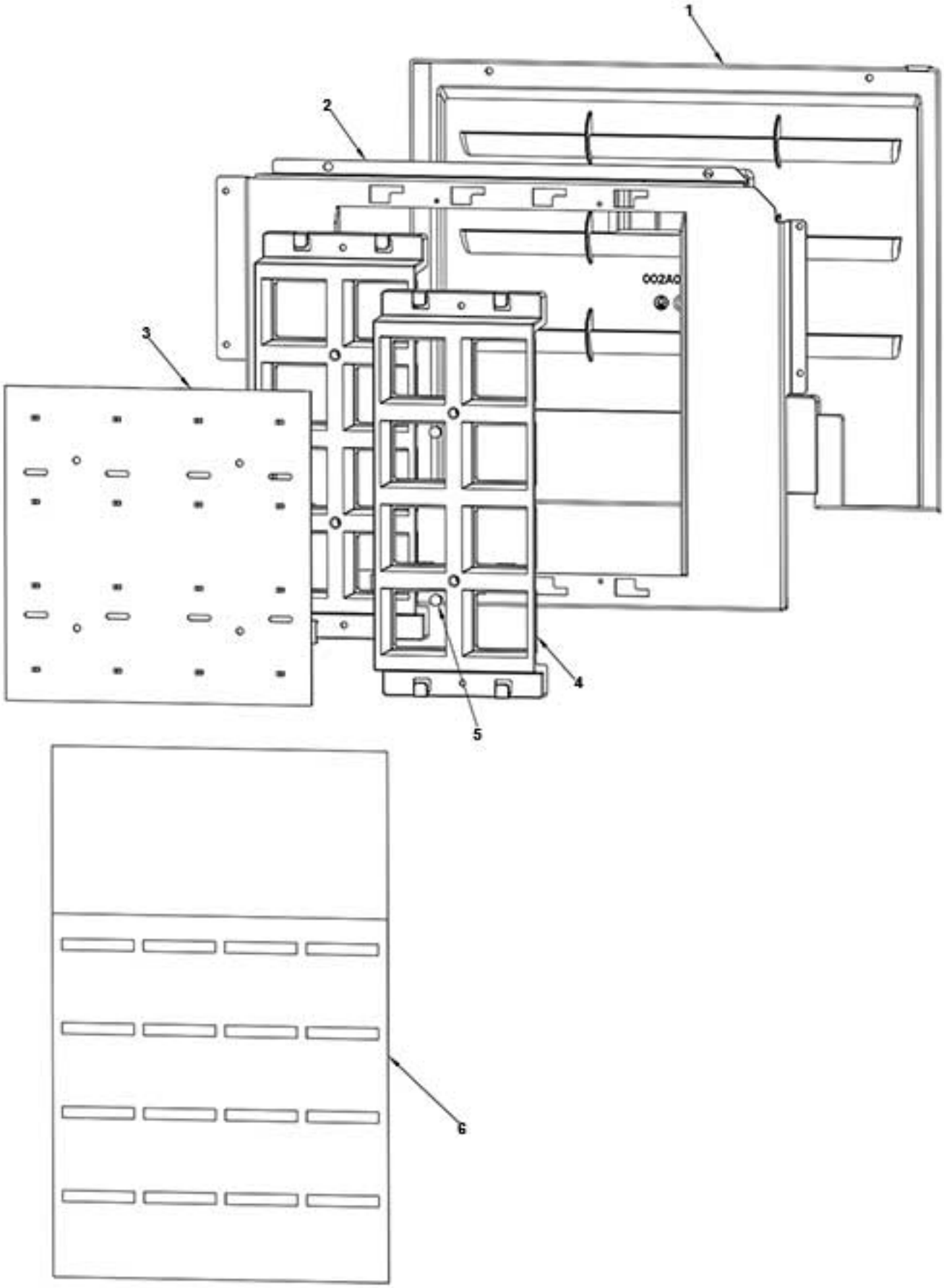

www.rheavendors.com tel: 0039 02 966 551 fax: 0039 02 96 55 086 email: rheavendors@rheavendors.com exclusive property of rheavendors group

KEYPAD		
Pos.	**Code**	**Description**
1	Z002A003031	COVER LIGHTING TAB
2	Z0020054113-02	FRONTAL LIGHTING SUPPORT
3	SCH0010520	16S KEYPAD BOARD
4	Z0020055041	LABELS LIGHT GUIDE
5	GUA0011031	SPACER
6	Z0020054115	16 SELECTIONS LABELS PANEL

www.rheavendors.com tel: 0039 02 966 551 fax: 0039 02 96 55 086 email: rheavendors@rheavendors.com exclusive property of rheavendors group

1 turret cups station

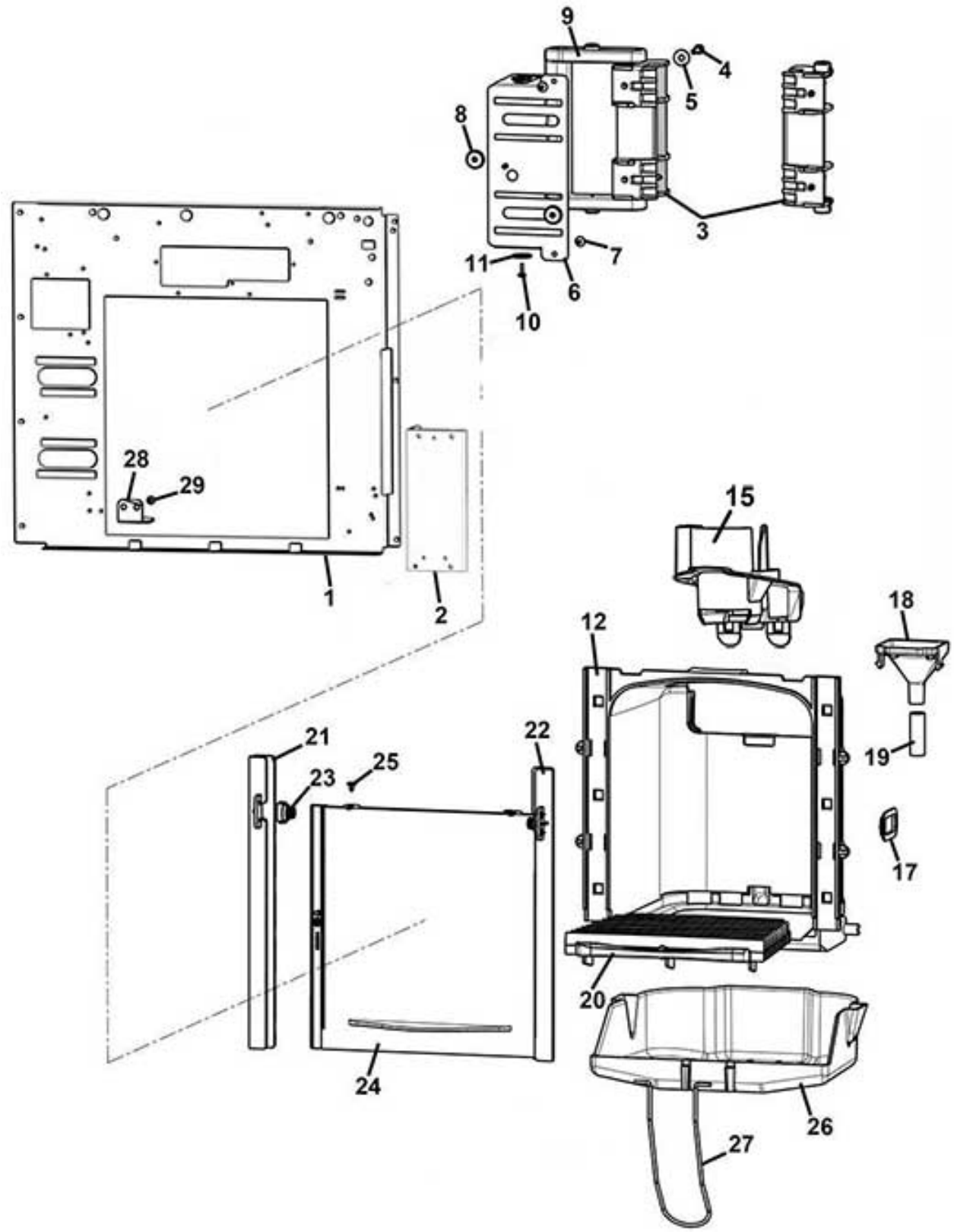

www.rheavendors.com tel: 0039 02 966 551 fax: 0039 02 96 55 086 email: rheavendors@rheavendors.com exclusive property of rheavendors group

1 turret cups station		
Pos.	**Code**	**Description**
1	Z002A003037	SUPPORT CUP STATION
2	Z0020054529-01	CUP STATION SUPPORT
3	Z0400009007CY	CUP STATION PLATE
4	VIT0001110	SCREW HEX HEAD M5X20
5	VIT0003302	WASHER 5,5X15X1,6
6	Z0400009016	HANDLE SUPPORT
7	VIT0002401	SCREW ST HEAD CAP M3.5X9.5
8	Z0400009009	CUP STATION SPACER
9	Z0400009008IC	CUP STATION HANDLE RAL2011
10	VIT0002469	SCREW HEAD TAP M3.5X10
11	VIT0003305	WASHER 5,5X20X2
12	Z0400009001CW	CUPS STATION FRAME RAL7043
15	Z0400009003CW	CUP CHUTE RAL 7043
17	Z0400009018	SENSOR PLUG
18	Z0400009015CW	DROPS CHUTE RAL7043
19/a	TSIL10/14T-10	SILICON HOSE 10X14 MT.10
19/b	TSIL10/14T-50	SILICON HOSE 10X14 MT.50
20	Z0400009019CW	CUP STATION GRID (RAL7043)
21	Z0400009851CWR	§ DOOR GUIDE LH+RH RAL 7043 Pos.21+22
22	Z0400009851CWR	§ DOOR GUIDE LH+RH RAL 7043 Pos.21+22
23	Z0400009096	FLAP RETARDER
24	Z0400009006	FLAP
25	GUA0011017	MACHINE FOOT D.7,9
26	Z0400009011CW	LIQUID CHUTE RAL7043
27	Z0150001053	DRIP TRAY SPRING
28	Z0400009025	SPACER PLATE
29	VIT0002009	SCREW ST HEAD CAP M3.5X6.5

www.rheavendors.com tel: 0039 02 966 551 fax: 0039 02 96 55 086 email: rheavendors@rheavendors.com exclusive property of rheavendors group

cups loader

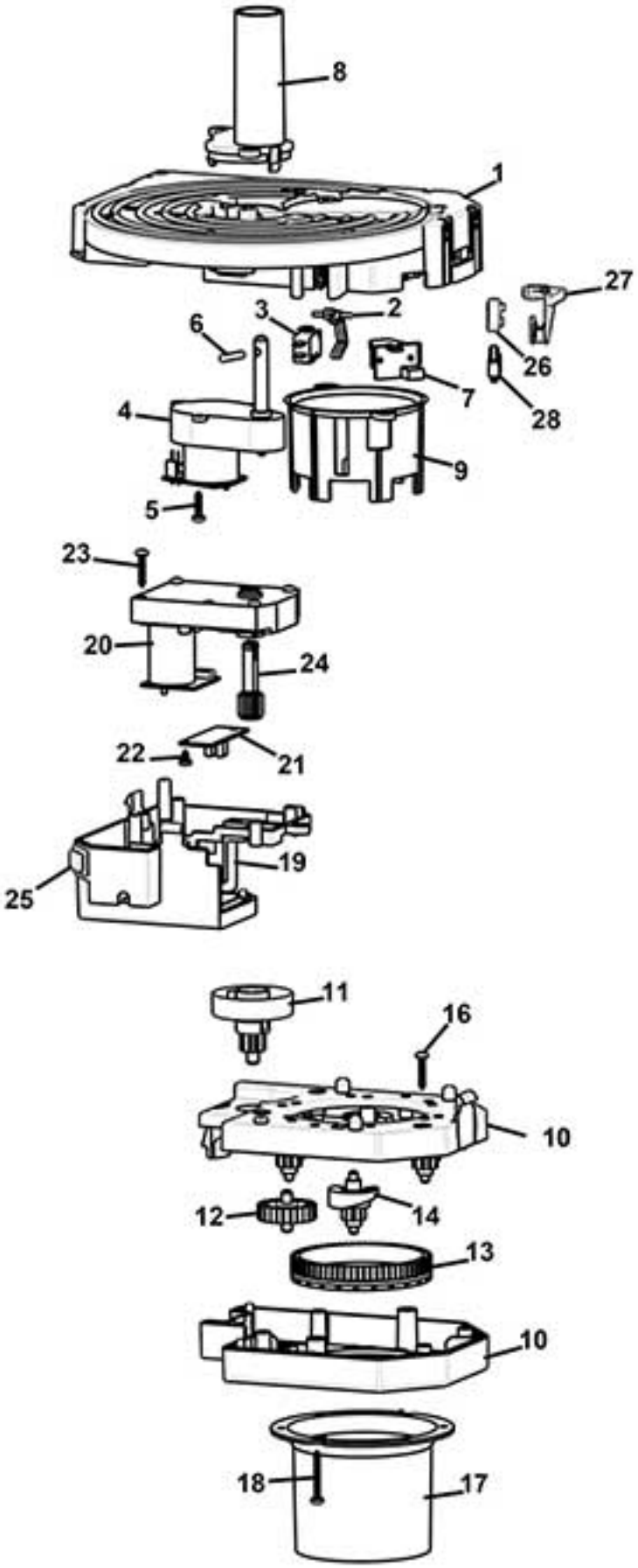

www.rheavendors.com tel: 0039 02 966 551 fax: 0039 02 96 55 086 email: rheavendors@rheavendors.com exclusive property of rheavendors group

cups loader		
Pos.	**Code**	**Description**
1	Z0190006581CI	TURRET SUPPORT RAL 7042
2	Z0190006543-01	MICROSWITCH LEVER WHITE
3	ELE0001530	MICROSWITCH 3A 125-250VA
4	Z0090002043R	§ MOTOR GEAR+BOARD
5	VIT0002469	SCREW HEAD TAP M3.5X10
6	VIT0005223	PIN 4X18 DIN 1475
7	SCH0007021	MOTOR FILTER
8	Z0190006547CF	TURRET CUP CONNEC. 5C. RAL7016
9/a	Z0190006538CF	CUPS REDUCER D.70 RAL7016
9/b	Z0190006539CY	CUPS REDUCER D.73 RAL9018
10	Z0190006521CYR	LOWER/UPPER CUP DROP MECH.
11	Z0190006511NA	CUPS TURRET SPINDLE BLACK
12	Z0190006528	Z26 WHEEL WHITE
13	Z0190006523	TOOTHED RING NUT D.70/73
14/a	Z0190006506IC	SPLIT UP D.70/78-ORANGE PL
14/b	Z0190006551GJ	SPLIT UP D.70/78-YELLOW PP
14/c	Z0190006502	CUP SPLITTER D.73/80 PP WHITE
15	Z0190006521CYR	LOWER/UPPER CUP DROP MECH.
16	VIT0002456	SCREW HEAD TAP M3.5X25
17	Z0190006514CY	CUPS CHUTE 70/73 RAL9018
18	VIT0002469	SCREW HEAD TAP M3.5X10
19	Z0190006522CY	MOTOR SUPPORT RAL9018
20	Z0090002114R	§ GEARBOX MOTOR 11RPM 24V DC
21	SCH0007000	SPLIT UP SENSOR
22	VIT0002002	SCREW ST HEAD CAP M3.5X6.5
23	VIT0002025	SCREW ST HEAD CAP M3.5X22
24	Z0190006518	TOOTHED SHAFT Z18 WHITE
25	ELE0002258CL	§ PUSH BUTTON RED
26	Z019A111001CI	MICRO SWITCH ACT. 0° DEGREES
27	Z019A111002CI	MICRO SUPPORT
28	CBLLZ00064	WIRED COLUMN MICROSWITCHG
100	Z0190006501CL11	§ CUP DISP. 5C D.70P PD DS From pos. 1 to pos. 28 (excluded pos. 9/b, 14/b and 14/c)
101	Z0190006501CL12	§ CUP DISP. 5C D.70 PAPER DS From pos. 1 to pos. 28 (excluded pos. 9/b, 14/a and 14/c)
102	Z0190006501CL13	§ CUP DISP. 5C D.73 PAPER DS From pos. 1 to pos. 28 (excluded pos. 9/a, 14/a and 14/b)
103	Z0190006534CL15R	§TURRET SUPPORT 5C From pos. 1 to pos.8+26-27-28
104	Z0190006521CLR	§ CUP DROP MECH. D.70 PL From pos. 10 to pos. 18 (excluded pos.14/b and 14/c)
105	Z0190006521CL2R	§ CUP DROP MECH. D.73 PP From pos. 10 to pos. 18 (excluded pos.14/a and 14/b)
106	Z0190006521CL0R	§ CUP DROP MECH. D.70 PP From pos. 10 to pos. 18 (excluded pos.14/a and 14/c)
107	Z0190006522CL1R	§ GEARS DB TURRET SUPPORT From pos. 19 to pos. 25

www.rheavendors.com tel: 0039 02 966 551 fax: 0039 02 96 55 086 email: rheavendors@rheavendors.com exclusive property of rheavendors group

5 columns cups turret

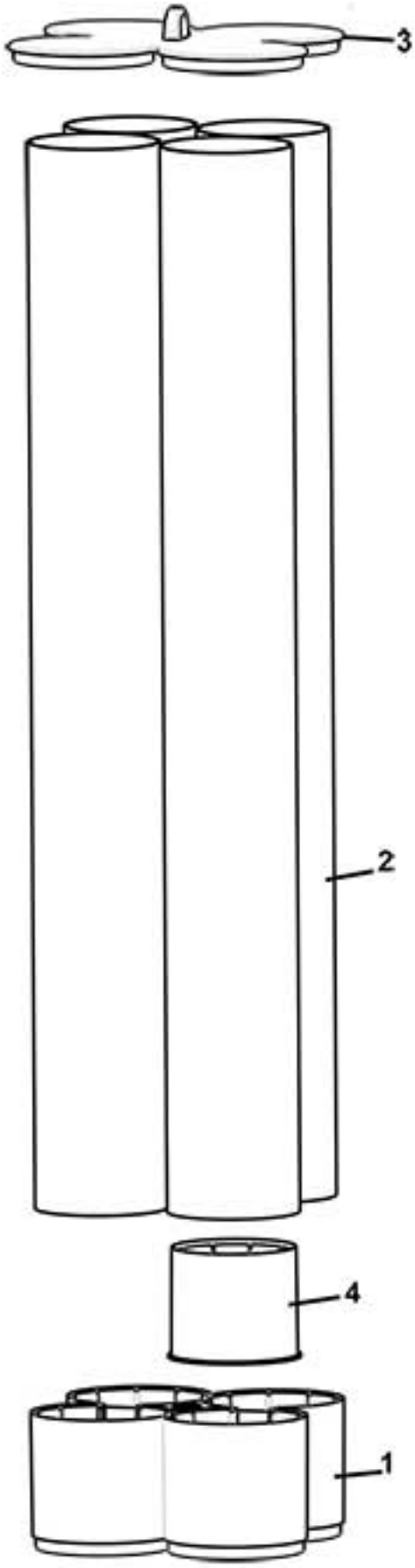

www.rheavendors.com tel: 0039 02 966 551 fax: 0039 02 96 55 086 email: rheavendors@rheavendors.com exclusive property of rheavendors group

5 columns cups turret		
Pos.	**Code**	**Description**
1	Z018A111011CY	CUP TURRET SPINDLE 5C D70 9018
2	Z0180013312	CUP HOLDER 1T D.84/81MM L640MM
3	Z0180013309CY	5 TURRETS LID (RAL9018)
4	Z0180013113	D.70 COLUMN REDUCTION (WHITE)
100	Z0180013101CL6R	§ CUPS TURRET 5COLUMNS D.70/73

www.rheavendors.com tel: 0039 02 966 551 fax: 0039 02 96 55 086 email: rheavendors@rheavendors.com exclusive property of rheavendors group

stirrer dispenser (1 TURRET)

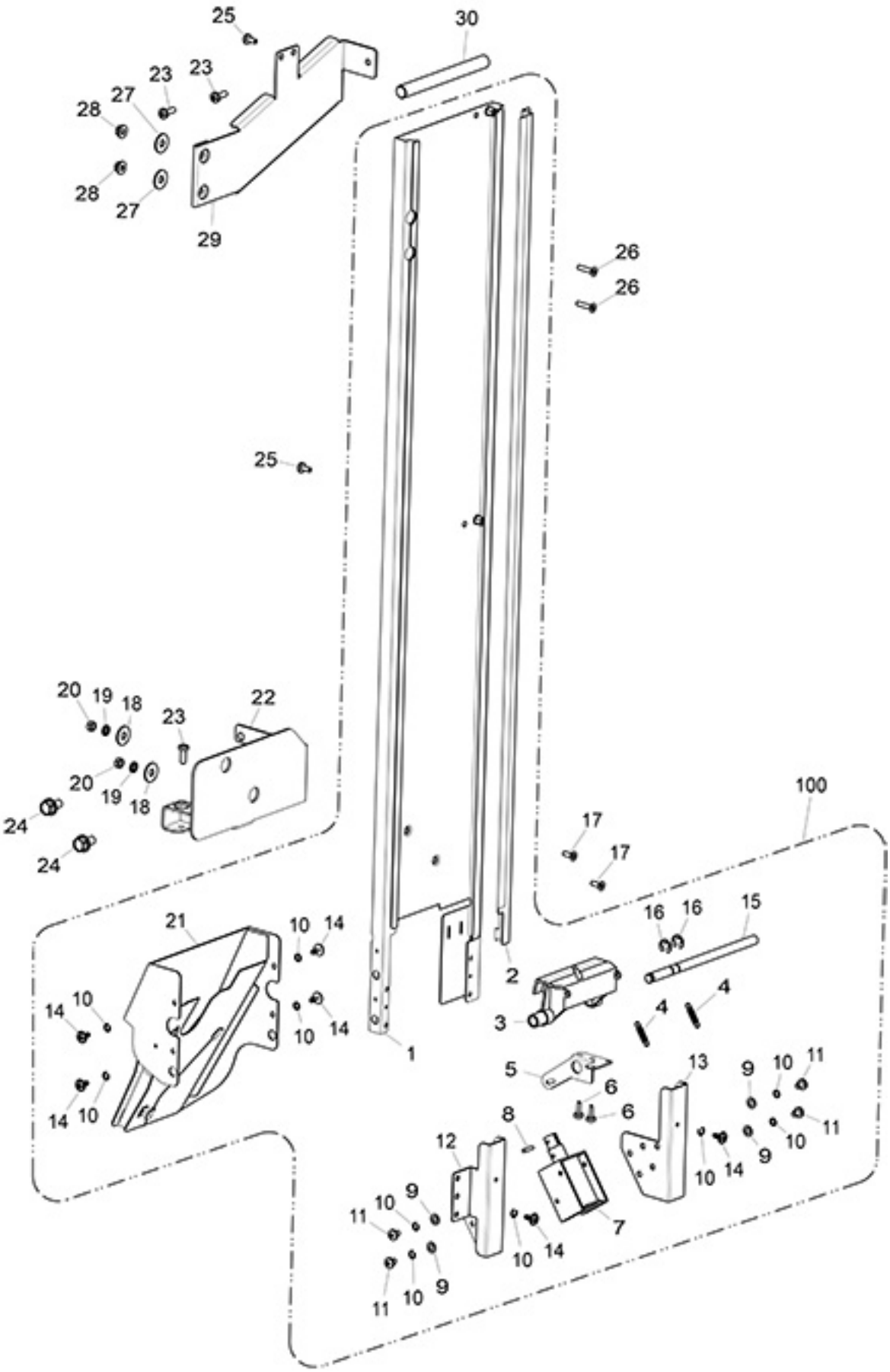

www.rheavendors.com tel: 0039 02 966 551 fax: 0039 02 96 55 086 email: rheavendors@rheavendors.com exclusive property of rheavendors group

stirrer dispenser (1 TURRET)		
Pos.	**Code**	**Description**
1	Z045A003005	STIRRERS CHUTE 104
2	Z045A003006	STIRRERS CHUTE RAIL 1T
3	Z0450002003	STIRRER EJECTOR
4	Z0450003010	SPRING
5	Z0450011065	STIRRER EJECTOR CONNECTING ROD
6	VIT0002469	SCREW HEAD TAP M3.5X10
7	ELE0000055	ELECTROMAGNET 5% 24V DC
8	VIT0005211	DOWEL PIN 2.5X12
9	VIT0003003	WASHER 4,3X8X0,8
10	VIT0003405	SPRING WASHER 4,3
11	VIT0000021	SCREW HEAD TAP CAP M4X6
12	Z0450011064	ELECTROMAGNET LEFT SUPPORT
13	Z0450011063	ELECTROMAGNET RIGHT SUPPORT
14	VIT0002401	SCREW ST HEAD CAP M3.5X9.5
15	Z0450011066	STIRRER EJECTOR PIN
16	VIT0006504	RING 5
17	VIT0000107	SCREW COUNT FLAT HEAD M4X10
18	VIT0003302	WASHER 5,5X15X1,6
19	VIT0003103	SPRING WASHER 4,3
20	VIT0004503	NUT M4
21	Z0450011090	STICKS FEEDER 89-104-115 1TUR
22	Z002A113017	STIRRER SUPPORT 1T
23	VIT0000013	SCREW HEAD TAP CAP M4X12
24	VIT0000236	SCREW HEX HEAD M6X11
25	VIT0000011	SCREW HEAD TAP CAP M4X8
26	VIT0000108	SCREW COUNT FLAT HEAD M4X16
27	VIT0003302	WASHER 5,5X15X1,6
28	DAM0000056	NUT M4
29	Z0020054026	STIRRERS REINFORCEMENT 1T
30/a	4001012030	STIRRER WEIGHT 89MM
30/b	Z0450003033	STIRRER WEIGHT 104MM
30/c	Z0450011121	STIRRER WEIGHT 115MM
100	Z0450011073CL	§ STIRRER DISP. 89/104/115 1T

www.rheavendors.com tel: 0039 02 966 551 fax: 0039 02 96 55 086 email: rheavendors@rheavendors.com exclusive property of rheavendors group

solubles dispenser H/5

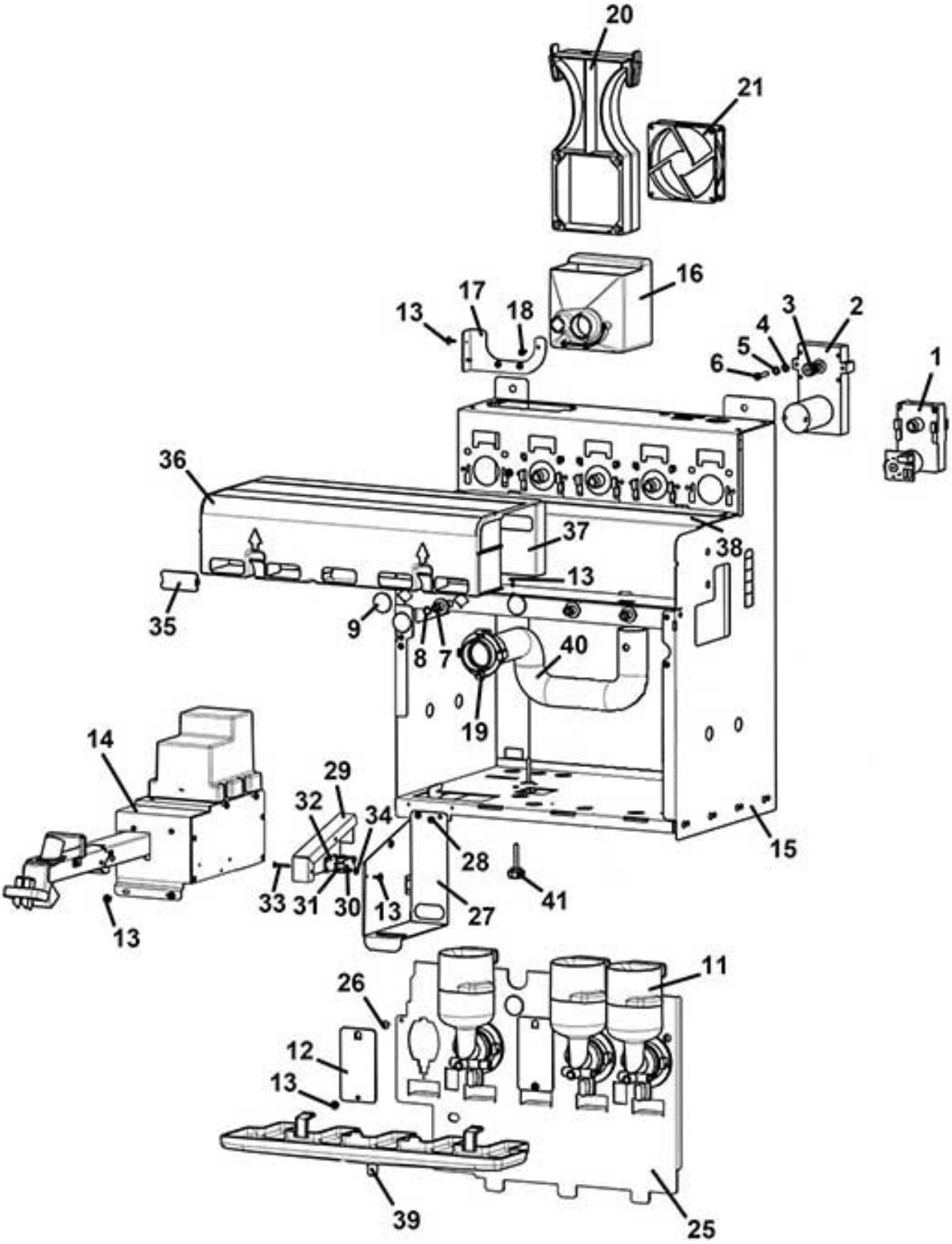

www.rheavendors.com tel: 0039 02 966 551 fax: 0039 02 96 55 086 email: rheavendors@rheavendors.com exclusive property of rheavendors group

solubles dispenser H/5		
Pos.	**Code**	**Description**
1	Z0090002113R	§ GEARBOX MOTOR 24V DC+FILTER
2/a	Z0090002082	MOTOR 24 DC 55 RPM
2/b	Z0090002081	MOTOR 24 DC 85 RPM
3	Z0230012010	PINION
4	Z0090002079	SPACER
5	VIT0003104	SPRING WASHER 5,3
6	VIT0000015	SCREW HEAD TAP CAP M4X25
7/a	Z0080100043	MIXER CONNECTOR BLACK
7/b	Z0080100043-02PL	MIXER CONNECTOR-SHORT BLUE
7/c	Z0080100043-02MD	MIXER CONNECTOR-SHORT GREEN
7/d	Z0080100043-02IC	MIXER CONNECTOR-SHORT ORANGE
8	GUA0000089	OR 2031 RED SILICONE A70
9	Z0080100035NA	CONNECTOR PLUG BLACK
11		See table mixer
12	Z0010020028NA	MIXER PLUG BLACK
13	VIT0002401	SCREW ST HEAD CAP M3.5X9.5
14		See table distribution pipes movement
15	Z0070020001-09	HOUSING H5
16	Z0070020017CY	EXTRACTOR FUNNEL RAL9018
17	Z0070020030	FAN PLATE
18	VIT0002469	SCREW HEAD TAP M3.5X10
19	Z0070020019CY	EXTRATOR TUBE SUPPORT
20	Z0070020024IC	FAN SUPPORT RAL2011
21	ELE0000468R	§ FAN 24V DC-HIGH SPEED-D.92
23	VIT0001005	SCREW HEAD TAP CAP M4X12
24	VIT0003109	SPRING WASHER 4,3
25	Z0070020011	MIXER SUPPORT
26	VIT0000012	SCREW HEAD TAP CAP M4X10
27	Z0070020231	PIPE SUPPORT GUIDE
28	VIT0002009	SCREW ST HEAD CAP M3.5X6.5
29	Z0070020037	SWITCH COVER
30	ELE0001528	MICROSWITCH
31	NL201106265	MICRO LEVER
32	4600010014	SPACER
33	VIT0000006	SCREW HEAD TAP CAP M3X16
34	VIT0004701	NUT M3
35	Z0070014776	TRAP PLUG
36	Z0070020012CY	EXTRACTOR DRAWER RAL9018
37	Z0070020013CY	EXTRACTOR COVER RAL9018
38	Z0070020004	TRAP SUPPORT (BLACK)
39	Z0070020035CY	POWDER TRAY RAL9018
40	TEOL000002	EXTRACTOR TUBE D.30
41	VIT0009164	HANDLE

www.rheavendors.com tel: 0039 02 966 551 fax: 0039 02 96 55 086 email: rheavendors@rheavendors.com exclusive property of rheavendors group

solubles dispenser H/6-1 GRINDER

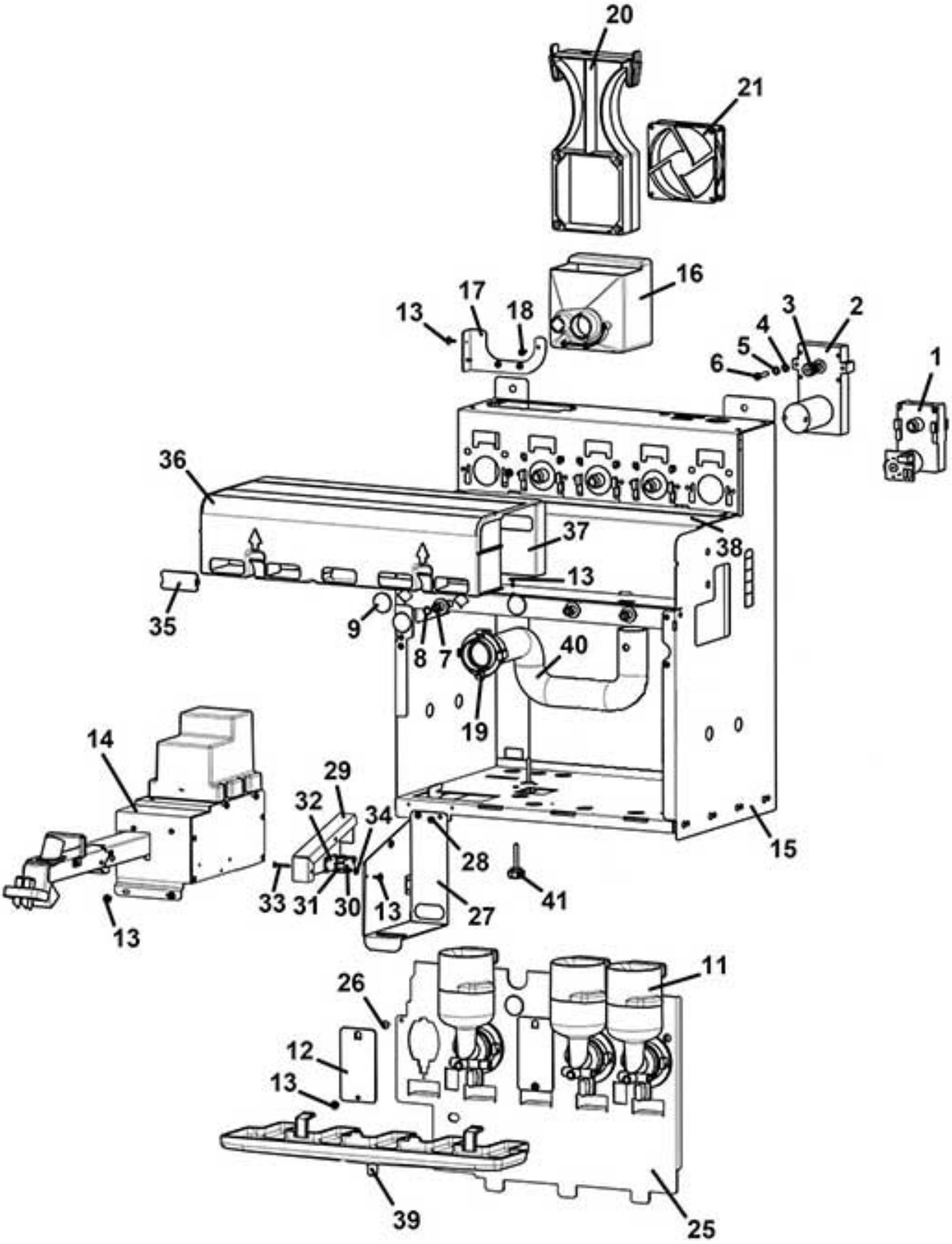

www.rheavendors.com tel: 0039 02 966 551 fax: 0039 02 96 55 086 email: rheavendors@rheavendors.com exclusive property of rheavendors group

solubles dispenser H/6-1 GRINDER		
Pos.	**Code**	**Description**
1	Z0090002113R	§ GEARBOX MOTOR 24V DC+FILTER
2/a	Z0090002082	MOTOR 24 DC 55 RPM
2/b	Z0090002081	MOTOR 24 DC 85 RPM
3	Z0230012010	PINION
4	Z0090002079	SPACER
5	VIT0003104	SPRING WASHER 5,3
6	VIT0000015	SCREW HEAD TAP CAP M4X25
7/a	Z0080100043	MIXER CONNECTOR BLACK
7/b	Z0080100043-02PL	MIXER CONNECTOR-SHORT BLUE
7/c	Z0080100043-02MD	MIXER CONNECTOR-SHORT GREEN
7/d	Z0080100043-02IC	MIXER CONNECTOR-SHORT ORANGE
8	GUA0000089	OR 2031 RED SILICONE A70
9	Z0080100035NA	CONNECTOR PLUG BLACK
11		See table mixer
12	Z0010020028NA	MIXER PLUG BLACK
13	VIT0002401	SCREW ST HEAD CAP M3.5X9.5
14		See table distribution pipes movement
15	Z0070020001-09	HOUSING H5
16	Z0070020017CY	EXTRACTOR FUNNEL RAL9018
17	Z0070020030	FAN PLATE
18	VIT0002469	SCREW HEAD TAP M3.5X10
19	Z0070020019CY	EXTRATOR TUBE SUPPORT
20	Z0070020024IC	FAN SUPPORT RAL2011
21	ELE0000468R	§ FAN 24V DC-HIGH SPEED-D.92
23	VIT0001005	SCREW HEAD TAP CAP M4X12
24	VIT0003109	SPRING WASHER 4,3
25	Z0070020011	MIXER SUPPORT
26	VIT0000012	SCREW HEAD TAP CAP M4X10
27	Z0070020231	PIPE SUPPORT GUIDE
28	VIT0002009	SCREW ST HEAD CAP M3.5X6.5
29	Z0070020037	SWITCH COVER
30	ELE0001528	MICROSWITCH
31	NL201106265	MICRO LEVER
32	4600010014	SPACER
33	VIT0000006	SCREW HEAD TAP CAP M3X16
34	VIT0004701	NUT M3
35	Z0070014776	TRAP PLUG
36	Z0070020012CY	EXTRACTOR DRAWER RAL9018
37	Z0070020013CY	EXTRACTOR COVER RAL9018
38	Z0070020004	TRAP SUPPORT (BLACK)
39	Z0070020035CY	POWDER TRAY RAL9018
40	TEOL000002	EXTRACTOR TUBE D.30
41	VIT0009164	HANDLE

www.rheavendors.com tel: 0039 02 966 551 fax: 0039 02 96 55 086 email: rheavendors@rheavendors.com exclusive property of rheavendors group

mixer

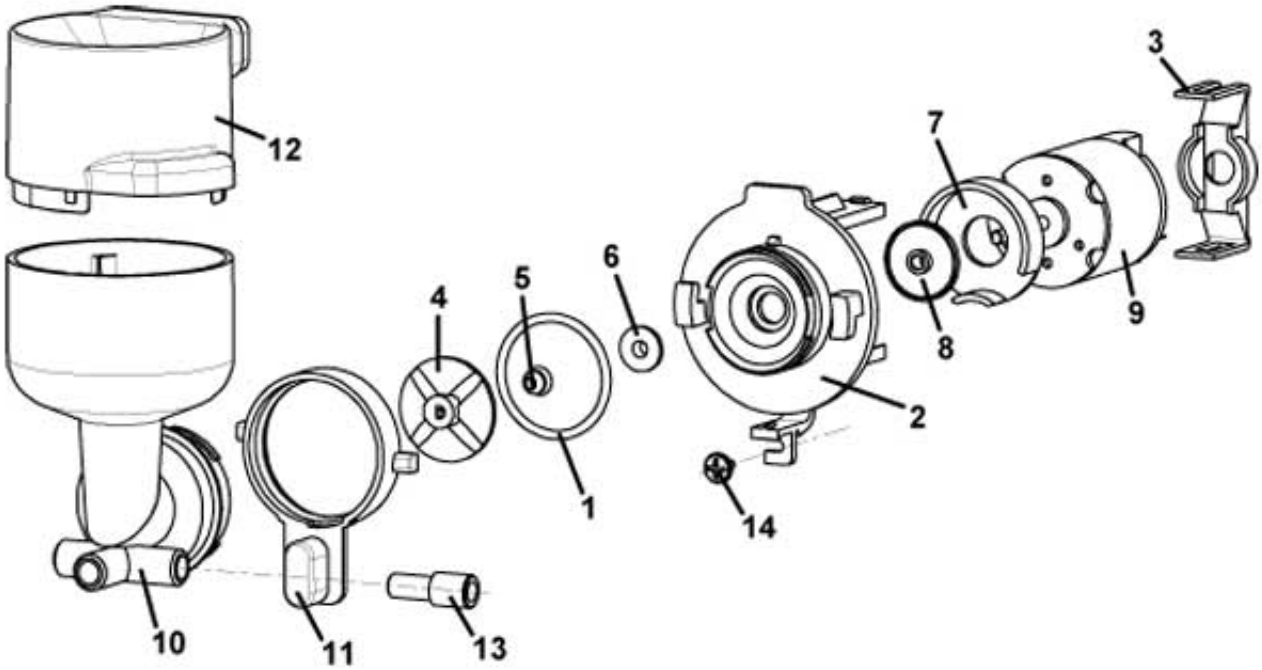

www.rheavendors.com tel: 0039 02 966 551 fax: 0039 02 96 55 086 email: rheavendors@rheavendors.com exclusive property of rheavendors group

mixer		
Pos.	**Code**	**Description**
1	GUA0000084	OR 3131 RED SILICONE A60
2	Z0080100005	MOTOR MIXER BASE
3	Z0080100009IC	MIXER MOTOR SUPPORT RAL2011
4	Z0080100011	MIXER FAN
5	Z0080100102	MIXER SHAFT GASKET
6	Z0080100015	MIXER BUSH
7	Z0080100023IC	MIXER COVER RAL2011
8	Z0080100024	MIXER FAN
9	Z0090003023	MIXER MOTOR 24V DC SHAFT D.4
10/a	Z0080200110L	MIXING BOWL L.W/H20 BREAKER
10/b	Z0080200111R	MIXING BOWL R.W/H20 BREAKER
10/c	Z0080200112C	MIXING BOWL F.W/H20 BREAKER
11	Z0080100006IC	LOCK RING RAL2011
12/a	Z0080100031NA	MIXING BOWL EXTRACTOR D.4,25
12/b	Z0080100029CK	MIXING BOWL EXTRACTOR D.2,3
12/c	Z0080100142NA	MIXING BOWL EXTRACTOR D4 BLACK
12/d	Z0080100143CK	MIXING BOWL EXTRACTOR D.2 7037
13	Z0080100095	TUBE REDUCER D.4
14	VIT0002401	SCREW ST HEAD CAP M3.5X9.5
100	Z0080100001R	§ MIXER BOWL BASE+MOTOR (from pos.1 to pos.9)

www.rheavendors.com tel: 0039 02 966 551 fax: 0039 02 96 55 086 email: rheavendors@rheavendors.com exclusive property of rheavendors group

distribution pipes movement

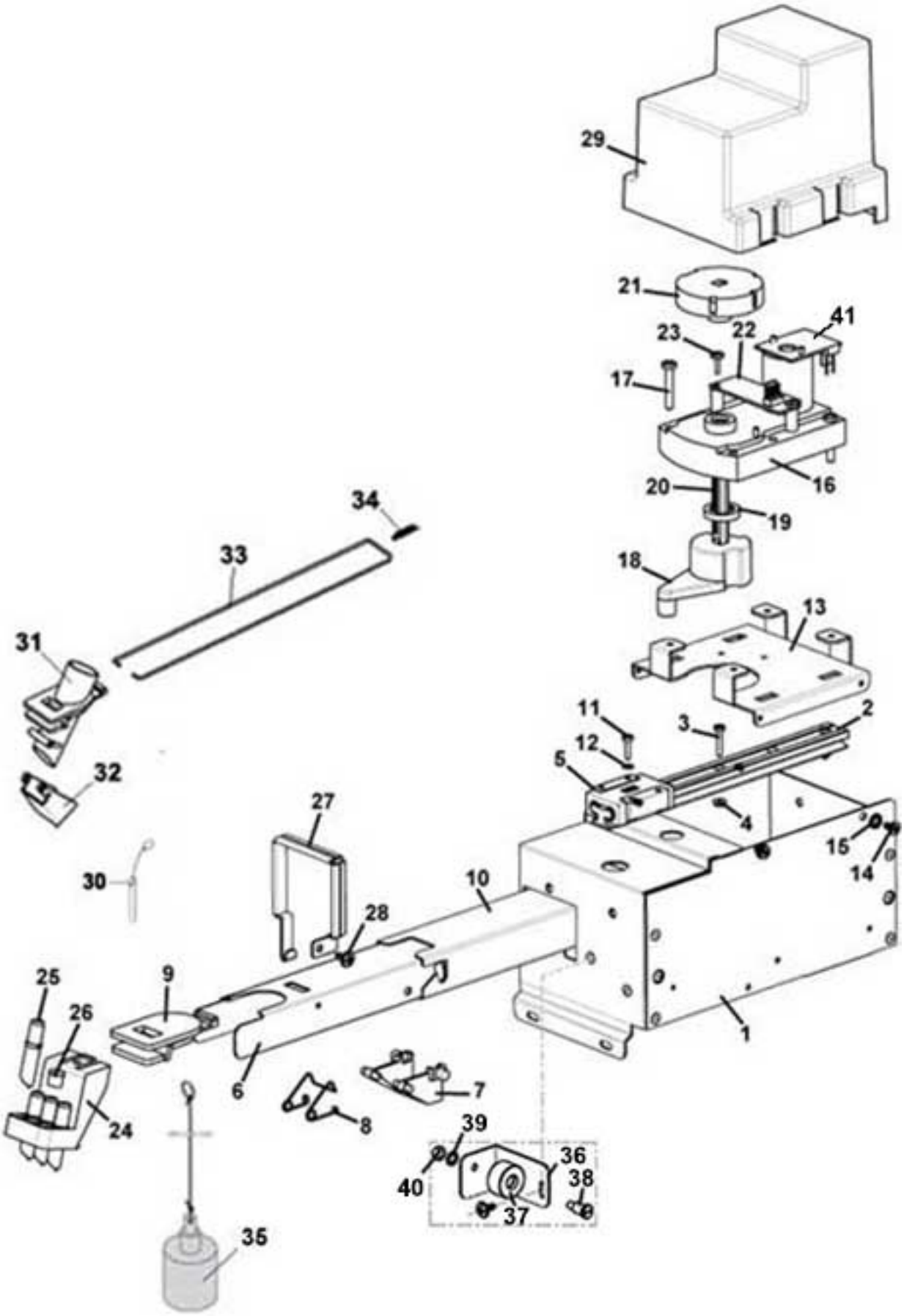

www.rheavendors.com tel: 0039 02 966 551 fax: 0039 02 96 55 086 email: rheavendors@rheavendors.com exclusive property of rheavendors group

distribution pipes movement		
Pos.	**Code**	**Description**
1/a	Z0380010827-03	PIPE MOVEMENT HOUSING
1/b	Z0380010865	PIPE MOVEMENT HOUSING For version H7
2	Z0380010796	NOZZLE HOLDER
3	VIT0000006	SCREW HEAD TAP CAP M3X16
4	VIT0004701	NUT M3
5	Z0380010798	NOZZLE MOVEMENT GUIDE
6	Z0380010821	NOZZLE HOLDER
7	Z0380010599	NOZZLE MOVEMENT BUTTON
8	Z0380010629	SPRING
9	Z0380010459NA	NOZZLE SUPPORT PLATE BLACK
10	Z0380010826	NOZZLE MOVEMENT SLIDE
11	VIT0000005	SCREW HEAD TAP CAP M3X12
12	VIT0003102	SPRING WASHER 3,2
13/a	Z0380010693	GEAR MOTOR SUPPORT
13/b	Z0380010867	MOTOR SUPPORT For version H7
14	VIT0002009	SCREW ST HEAD CAP M3.5X6.5
15	VIT0003103	SPRING WASHER 4,3
16	Z0090002109	GEAR MOTOR 24 RPM 24V DC
17	VIT0000015	SCREW HEAD TAP CAP M4X25
18	Z0380010694	NOZZLE MOVEMENT CAM
19	Z0380010831	BUSH 20x4
20	Z0380009542	SUGAR DISPENSER SHAFT
21	Z0380009541	POSITION DISK NOZZLE MOVEMENT
22	SCH0003700	TUBES SENSOR
23	VIT0002125	SCREW ST HEAD CAP M3.9X9,5
24	Z0380010655NA/L	NOZZLES HOLDER
25	Z0380010657NA	ESPRESSO NOZZLE D. 5,7
26	Z0380010656NA	PLUG BLACK
27	Z0380010882NA	CLAMP FIXING PIPES
28	VIT0002004	SCREW ST HEAD CAP M3.5X13
29	Z0380010695NA	NOZZLE MOVEMENT COVER BLACK
30	Z0380010429CL	§ FIXING PLATE PIN
31	Z0380011229NA	SUGAR CHUTE
32	Z0380010424NA	SUGAR SPLITTER
33	Z0380010823	BRACKET
34	Z0380010431	SPRING
35	Z0070020038CL2	§ WASTE FLOAT
36	Z0380012221	BRACKET
37	Z0380012225NA	BEARING
38	Z0200001012	PIN BEARING
39	VIT0004503	NUT M4
40	VIT0003103	SPRING WASHER 4,3
41	SCH0003740	MOTOR FILTER
100	Z0380010793CL	§ INSTANT NOZZLES MOVEMENT From pos.1 to pos. 23 and from pos.36 to pos. 41
101	Z0380010792CL	§ ESPRESSO NOZZLES MOVEMENT From pos. 1 to pos. 23 excluded pos. 9 and from pos.31 to pos. 41 excluded pos.35
102	Z0380010860CL	§ESPR.NOZZLES MOVEMENT E9 EE9 From pos. 1 to pos. 23 excluded pos. 9 and from pos.31 to pos. 41 excluded pos.35

www.rheavendors.com tel: 0039 02 966 551 fax: 0039 02 96 55 086 email: rheavendors@rheavendors.com exclusive property of rheavendors group

1 BLACK GRINDER - VARIFLEX COFFEE GROUP HOUSING

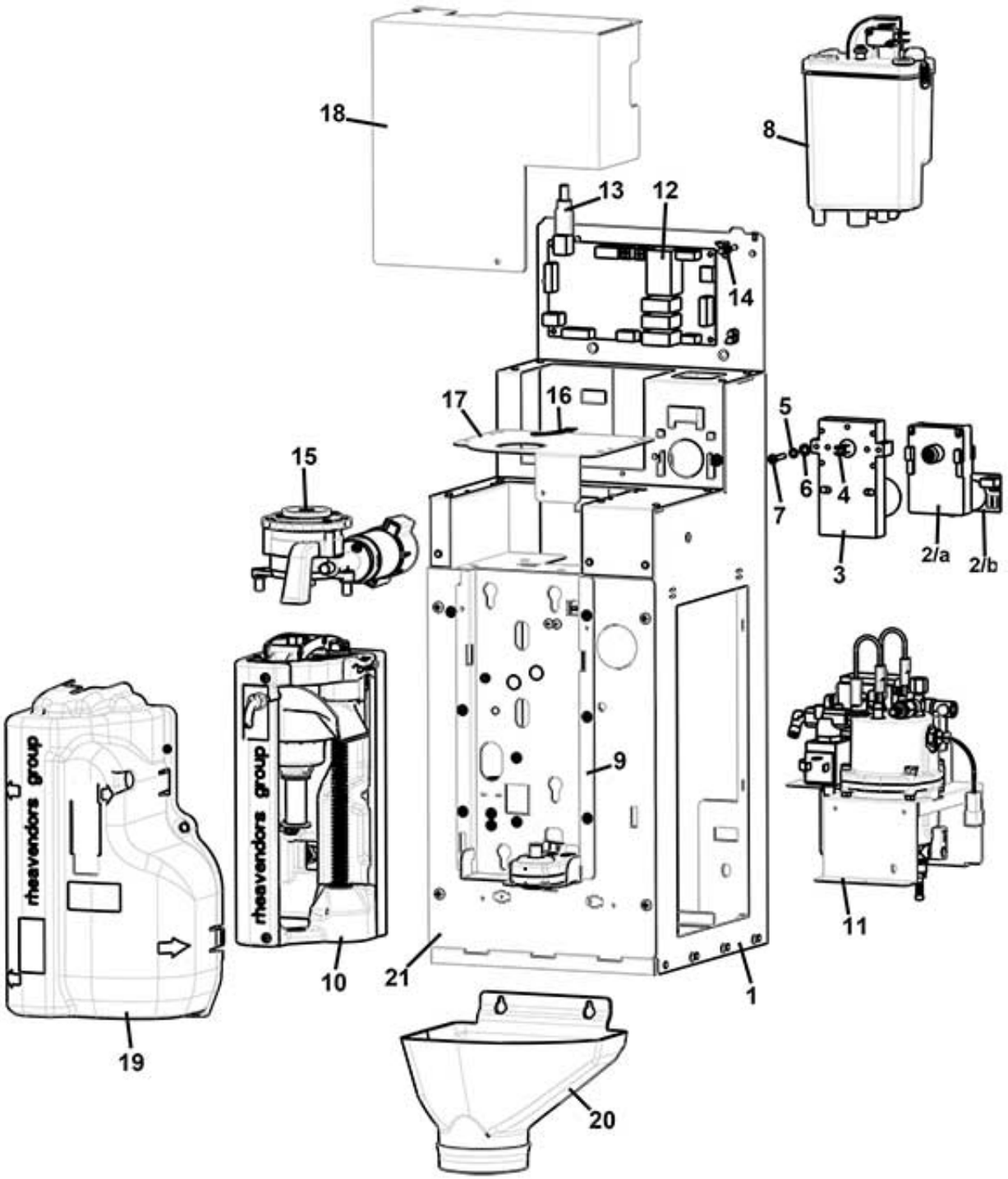

www.rheavendors.com tel: 0039 02 966 551 fax: 0039 02 96 55 086 email: rheavendors@rheavendors.com exclusive property of rheavendors group

1 BLACK GRINDER - VARIFLEX COFFEE GROUP HOUSING		
Pos.	**Code**	**Description**
1	Z0260014455-06	VARIF. HOUSING 1 BLACK GRINDER
2/a	Z0090002113	MOTOR 24 DC 97 RPM
2/b	SCH0003760	MOTOR FILTER
3	Z0090002082	MOTOR 24 DC 55 RPM
4	Z0230012010	PINION
5	VIT0003103	SPRING WASHER 4,3
6	Z0090002079	SPACER
7	VIT0000015	SCREW HEAD TAP CAP M4X25
8		See table water inlet panel
9		See table PRO BREWER SUPPORT+MOTOR
10		See table PROFESSIONAL BREWER GROUP D.45
11		See table 400CC ESPRESSO S.STEEL BOILER SUPPORT
12	BRD03002	2M FS COFFEE BREWER BOARD
13	ELT0030874	USB WIRING 1,5MT
14	ELE0062008	BOARD SUPPORT
15		See table horizontal grinder
16	Z0320004729	GRINDER REGULATION LABEL
17	Z0260014464	CONTAINER SUPPORT
18	Z0260011134	BOARD COVER
19	Z0250014074CL1	§ VARIFLEX BREWER COVER-FS
20	Z0070015151NA	GROUNDS CONTAINER
21	Z0260014463-03	1 GRINDER-VARIFLEX COFFEE GR.
100	Z0090002113R	§ GEARBOX MOTOR 24V DC+FILTER Pos.2/a+2/b

www.rheavendors.com tel: 0039 02 966 551 fax: 0039 02 96 55 086 email: rheavendors@rheavendors.com exclusive property of rheavendors group

water inlet panel

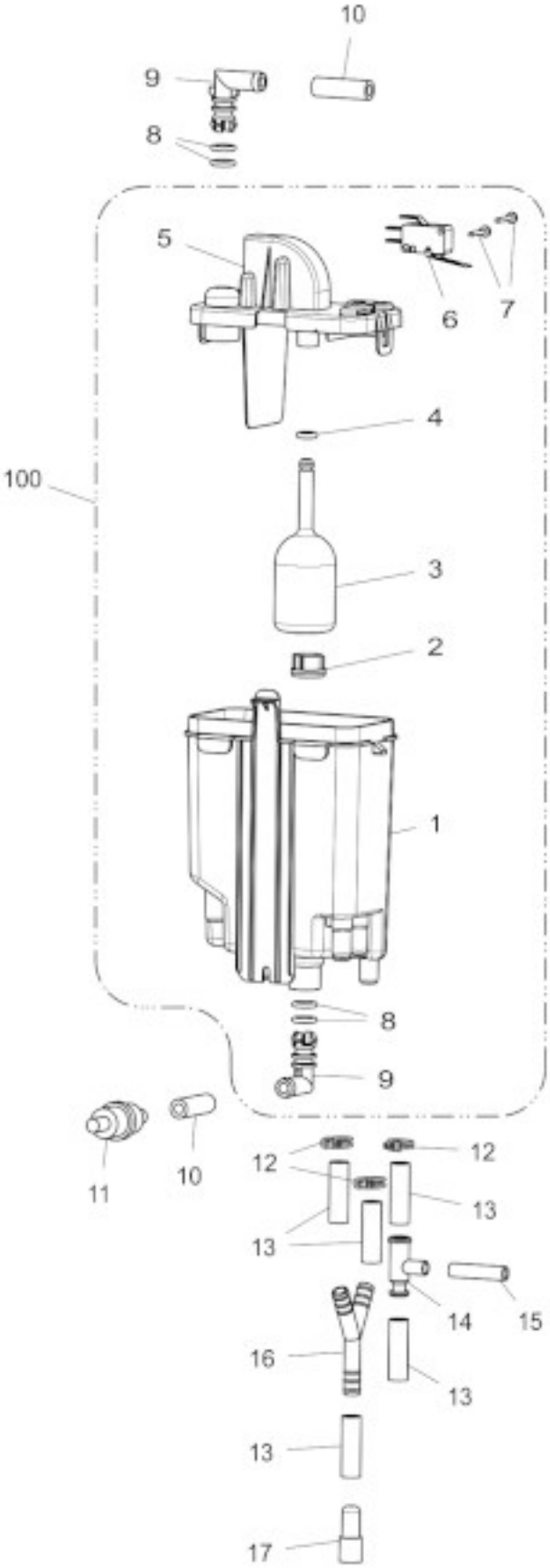

www.rheavendors.com tel: 0039 02 966 551 fax: 0039 02 96 55 086 email: rheavendors@rheavendors.com exclusive property of rheavendors group

water inlet panel		
Pos.	**Code**	**Description**
1	Z0800013041	AIR BREAK TANK
2	Z0110020007	PLASTIC FILTER DIAM. 20
3	Z0800013046	AIR BREAK WASTE FLOAT
4	GUA0000082	SILICON GASKET D.6
5	Z0800013043	AIR BREAK COVER
6	ELE0001514	MICROSWITCH 3A 125-250VA
7	VIT0002013	SCREW ST HEAD CAP M2.9X19
8	GUA0000043	OR 109 NBR AL 75 BLACK
9	Z0800009211	ELBOW CONNECTOR
10/a	TSIL06/11T-10	SILICON HOSE 6X11 MT.10
10/b	TSIL06/11T-50	SILICON HOSE 6X11 MT.50
11	Z0109002002	H2O FILTER
12	FASC000109	CLAMP
13/a	TSIL07/11T-10	SILICON HOSE 7X11 MT.10
13/b	TSIL07/11T-50	SILICON HOSE 7X11 MT.50
14	Z0600016028	T CONNECTOR
15/a	TSIL05/08T-10	SILICON HOSE 5X8 MT.10
15/b	TSIL05/08T-50	SILICON HOSE 5X8 MT.50
16	Z0100001065	CONNECTOR "Y"
17	650001057	DRAINER PLUG
100	Z0800014001R	§ AIR BREAK FS

www.rheavendors.com tel: 0039 02 966 551 fax: 0039 02 96 55 086 email: rheavendors@rheavendors.com exclusive property of rheavendors group

400CC ESPRESSO S.STEEL BOILER SUPPORT

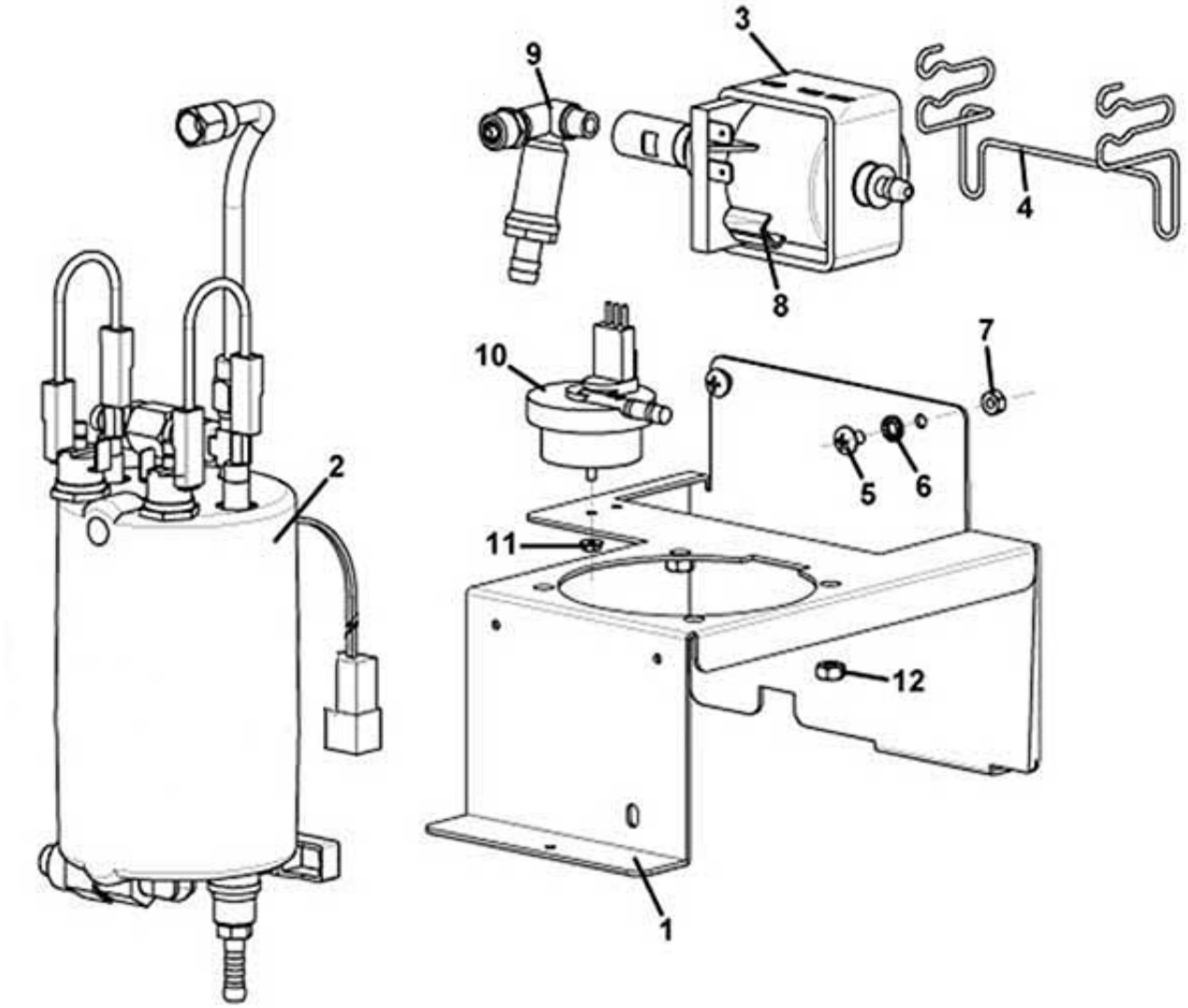

www.rheavendors.com tel: 0039 02 966 551 fax: 0039 02 96 55 086 email: rheavendors@rheavendors.com exclusive property of rheavendors group

400CC ESPRESSO S.STEEL BOILER SUPPORT		
Pos.	**Code**	**Description**
1	Z0260014476	HYDRIC COMPONENTS SUPPORT
2		See table ESPRESSO BOILER STAINLESS STEEL 400CC
3	Z0110004041	PUMP EX5 230V-50HZ
4	Z0110004038	PUMP SUPPORT
5	VIT0000030	SCREW HEAD TAP CAP M4X7
6	VIT0003103	SPRING WASHER 4,3
7	VIT0004503	NUT M4
8	ELE0000915	PUMP THERMOPROTECTOR
9	Z0110004070	BY PASS VALVE 11 BAR
10	Z0110007003	VOLUMETRIC COUNTER
11	VIT0004701	NUT M3
12	VIT0004504	NUT M5

www.rheavendors.com tel: 0039 02 966 551 fax: 0039 02 96 55 086 email: rheavendors@rheavendors.com exclusive property of rheavendors group

ESPRESSO BOILER STAINLESS STEEL 400CC

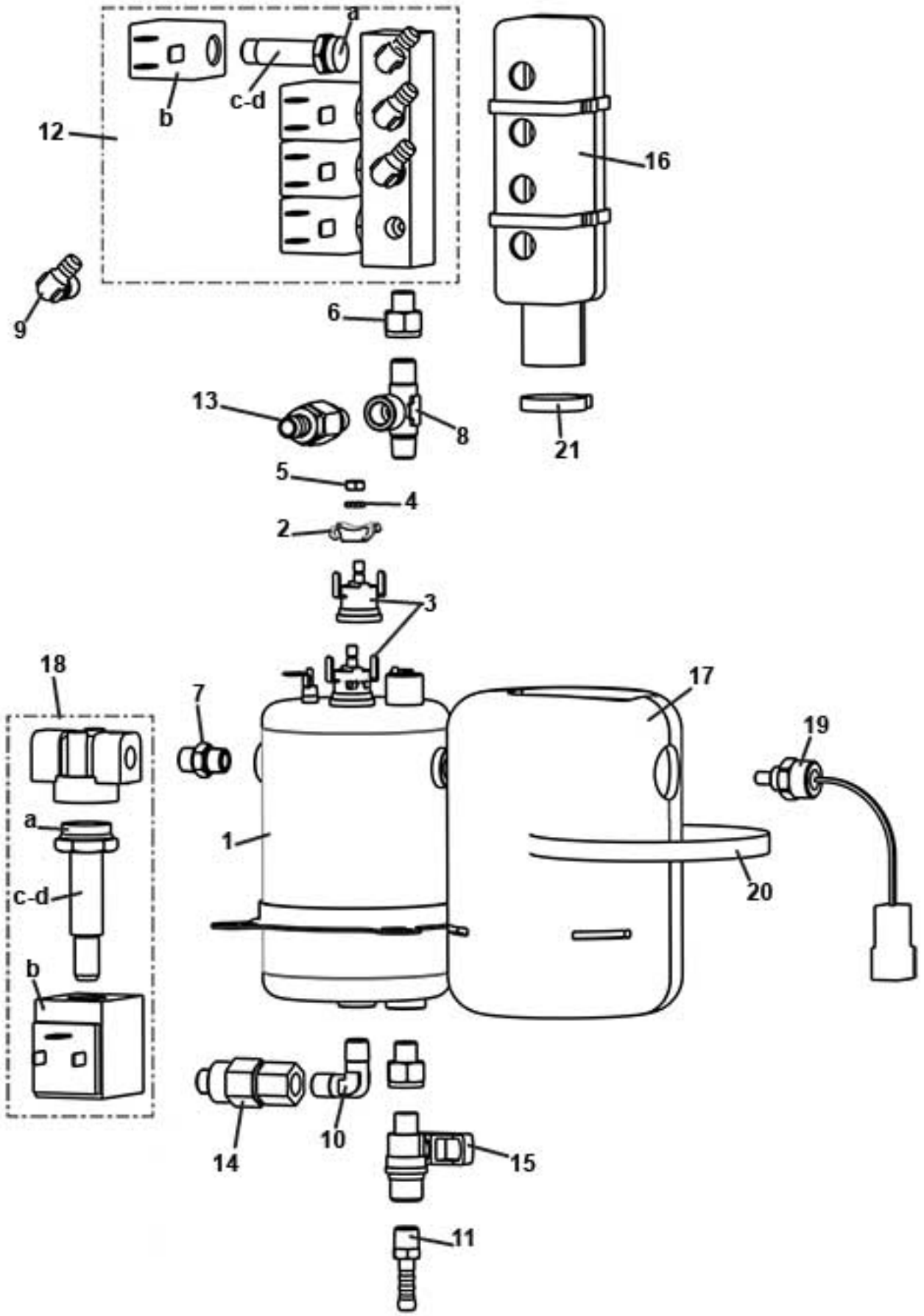

www.rheavendors.com tel: 0039 02 966 551 fax: 0039 02 96 55 086 email: rheavendors@rheavendors.com exclusive property of rheavendors group

ESPRESSO BOILER STAINLESS STEEL 400CC		
Pos.	**Code**	**Description**
1	Z0600019701CL	§ BOILER 1500 W 230V 400 CC From pos.1 to pos. 5
2	Z0600019188	THERMOSTAT CLIP
4	VIT0003109	SPRING WASHER 4,3
3	ELE0000982	CLIXSON 127°
5	VIT0004803	NUT M4
6	Z0100001067	CONNECTOR SO40-1/8-1/8
7	Z0100001084	NIPPLE 1/8
8	Z0100001086	T CONNECTOR 1/8
9	Z0100001102	CONNECTOR 1/8"-Ø7,2 90°
10	Z0100001110	ELBOW CONNECTOR 6-1/8
11	Z0100001112	RUBBER HOLDER
12	Z0110001129	VALVE BLOCK 4-2W 24V DC 7W
12/a	Z0110010138	SLEEVE D.13,9+WHITE OR
12/a	Z0110010148	SLEEVE D.14,9+GREEN OR
12/b	Z0110010135	COIL 7W 24V DC
12/c-d	Z0110010136	CORE+SPRING
13	Z0110002013	SAFETY VALVE 1/8M D.9
14	Z0110002029	SAFETY VALVE M:1/8GAS
15	Z0600019017	TAP M/F 1/8
16	Z0600019175	EV HOUSING INSULATION
17	Z0600019195	INSULATION SHELL
18	Z0110001112	VALVE 3W 1/8 24V DC
18/a	Z0110010142	SLEEVE
18/b	Z0110010141	COIL 24V DC
18/c	Z0110010144	CORE+SPRING
18/d	Z0110010146	SPRING
19	ELE0000975	PROBE
20	FASC000214	PLASTIC CLIP BLACK 7,8X365
21	FASC000215	PLASTIC CLIP BLACK 2,6X200
100	Z0600019778CL	§400 INOX BOILER E4+1 230V From pos. 1 to pos. 29

www.rheavendors.com tel: 0039 02 966 551 fax: 0039 02 96 55 086 email: rheavendors@rheavendors.com exclusive property of rheavendors group

PRO BREWER SUPPORT+MOTOR

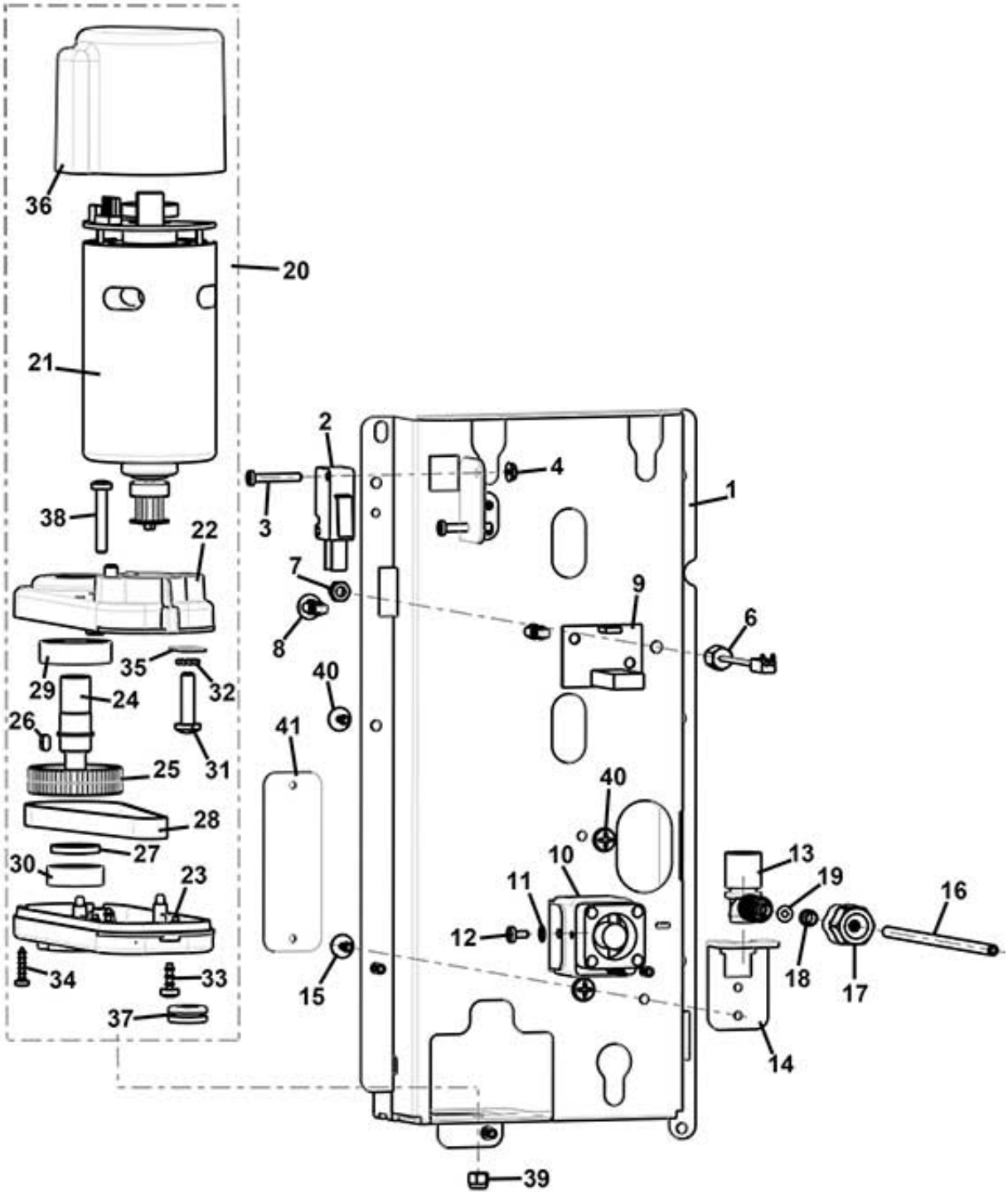

www.rheavendors.com tel: 0039 02 966 551 fax: 0039 02 96 55 086 email: rheavendors@rheavendors.com exclusive property of rheavendors group

PRO BREWER SUPPORT+MOTOR		
Pos.	**Code**	**Description**
1	Z0260014042	VARIFLEX BREWER SUPPORT
2	ELE0001522	MICROSWITCH
3	VIT0000006	SCREW HEAD TAP CAP M3X16
4	VIT0004701	NUT M3
6	ELE0000931	PROBE NTC 10K/TE
7	VIT0004803	NUT M4
8	ELE0062020	BOARD SUPPORT
9		Heater board sold with code ELE0000467-02
10	ELE0000467-02	FAN HEATER 24V DC + BOARD
11	VIT0003102	SPRING WASHER 3,2
12	VIT0000002	SCREW HEAD TAP CAP M3X6
13	Z0250014084-02	FEMALE CONNECTOR
14	Z0260014009-01	H2O CONNECTOR SUPPORT
15	VIT0002009	SCREW ST HEAD CAP M3.5X6.5
16	TTEF02/04T	PTFE PIPE 2X4
17	Z0250014086	NUT
18	Z0100002014	LOCKING RING SO1-4
19	GUA0000061	OR 2010 VITON 80 BLACK
20	Z0090002250R	§ VARIFLEX BREW. GEARBOX MOTOR From pos. 21 to pos.37
21	Z0090002252-01	§ MOTOR 24V DC
22	Z0090002222NA	MOTOR UPPER CASE RAL9005
23	Z0090002223NA	MOTOR LOWER CASE RAL9005
24	Z0090002224	FEMALE CONNECTOR SHAFT
25	Z0090002255AN	PULLEY
26	VIT0006703	CLAMP
27	Z0090002226	SPACER
28	Z0090002258	BELT
29	VIT0009324	BEARING
30	VIT0009320	BEARING
31	VIT0000017	SCREW HEAD TAP CAP M5X20
32	VIT0003104	SPRING WASHER 5,3
33	VIT0002469	SCREW HEAD TAP M3.5X10
34	VIT0002014	SCREW ST HEAD CAP M2.9X13
35	Z0090002240	MOTOR SPACER
36	Z0090002235CK	MR GV BOARD COVER R.7037
37	GUA0010501	ELECTRICAL GROMMET DG 7,5
38	VIT0000015	SCREW HEAD TAP CAP M4X25
39	VIT0004815	NUT M4
40	VIT0002401	SCREW ST HEAD CAP M3.5X9.5
41		PARTS NO MORE AVAILABLE
100	Z0250014086R2	§WATER INLET PIPE 0,27 mt From pos. 16 to pos. 19
101	Z0090002224R	§ FEMALE CONNECTOR SHAFT From pos.24 to pos.30 excluded pos.28

www.rheavendors.com tel: 0039 02 966 551 fax: 0039 02 96 55 086 email: rheavendors@rheavendors.com exclusive property of rheavendors group

PROFESSIONAL BREWER GROUP D.45

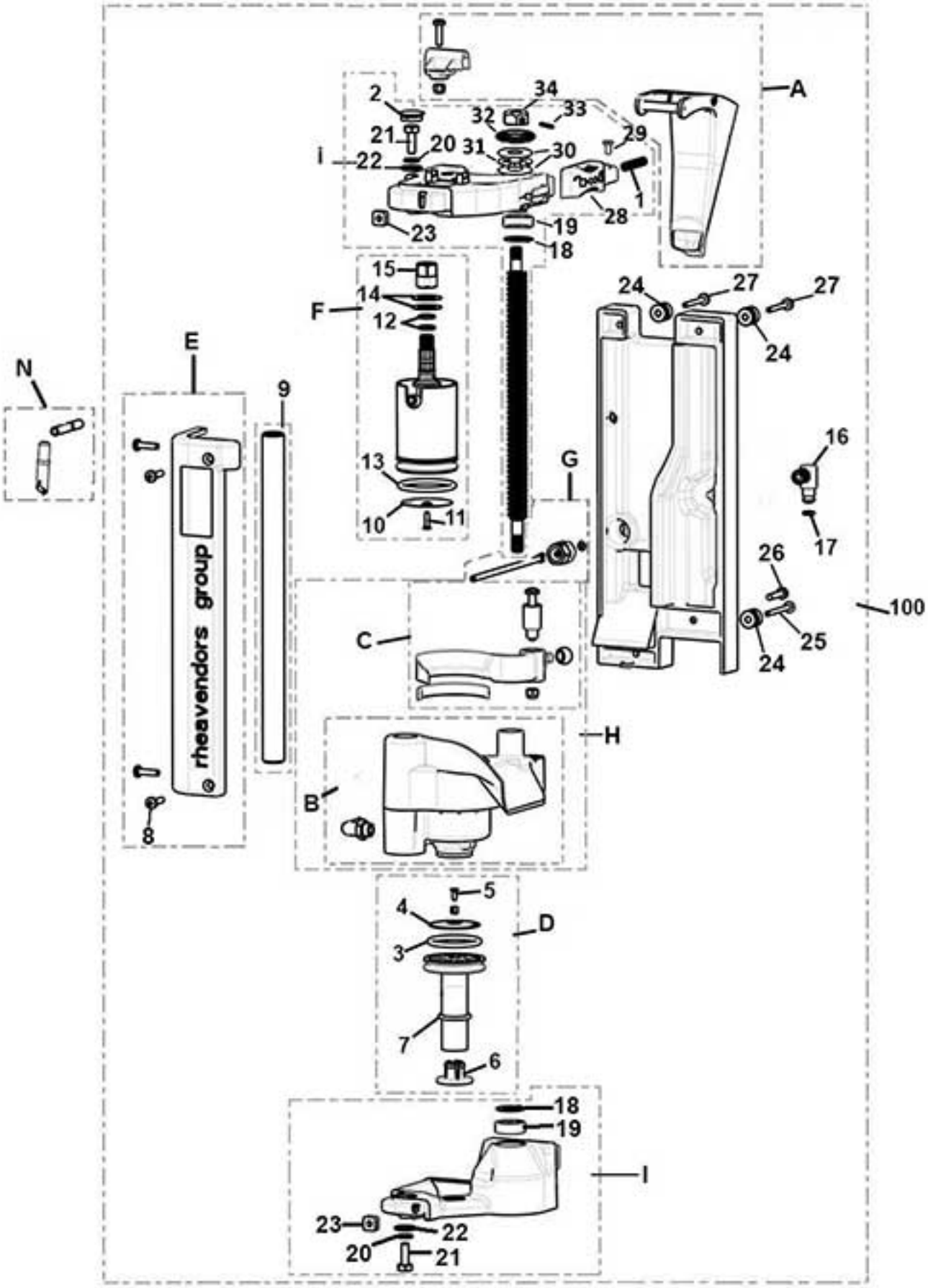

www.rheavendors.com tel: 0039 02 966 551 fax: 0039 02 96 55 086 email: rheavendors@rheavendors.com exclusive property of rheavendors group

PROFESSIONAL BREWER GROUP D.45		
Pos.	**Code**	**Description**
A	Z0250014008R	§ CHUTE D. 45
1	Z0250014081	SPRING
2	GUA0011022	PLUG
B	Z0250014022R	§ INFUSION CHAMBER D.45 included internal components and elbow
C	Z0250014024R	§ BRUSH D.45
D	Z0250014028R	§ LOWER FILTER HOLDER D.45
3	GUA0000097	OR 4131 RED SILICONE LSR70
4	Z0250014029	COFFEE FILTER DIAM. 37.3
5	VIT0000121	SCREW COUNT FLAT HEAD M3X8
6	Z0250014027R1	LOWER PISTON LOCK+SET SCREW
7	GUA0000103	OR 3075 SILICON
E	Z0250014019R	§ FRONTAL COVER
8	VIT0001009	SCREW HEAD TAP CAP M4X16
9	Z0250014013-04	CYLINDRICAL GUIDE
F	Z0250014045R	§ UPPER FILTER HOLDER D.45
10	Z0250008211	COFFEE FILTER 37,3
11	VIT0000129	SCREW COUNT HEAD M3X12
12	GUA0000045	OR 108 VITON 80 BLACK
13	GUA0000067	OR 4143 RED SILICONE LSR70
14	Z0250014048	SPRING
15	Z0250014086	NUT
16	Z0250014085	MALE CONNECTOR
17	GUA0000004	OR 104 NBR AL 75 BLACK
G	Z0250014086R	§ WATER INLET TUBE 0,15 mt
I	Z0250014005R2	§UPPER SUPPORT WITHOUT CHUTE
H	Z0250014020R	§ INFUSION CHAMBER D.45
L	Z0250014012R	§ LOWER SUPPORT
18	Z0250014077	SPACER
19	VIT0009320	BEARING
20	VIT0003113	SPRING WASHER 6,4
21	VIT0000249	SCREW HEX HEAD M6X16
22	Z0250014079	WASHER D.15 D.6,5 SP.1,5
23	VIT0009112	NUT M4
24	Z0250014072	PIN
25	VIT0000033	SCREW HEAD TAP CAP M4X35
26	VIT0001011	SCREW HEAD TAP CAP M4X20
27	VIT0001006	SCREW HEAD TAP CAP M4X30
28	Z0250014082	BREWER STOPPER BUTTON
29	VIT0002009	SCREW ST HEAD CAP M3.5X6.5
30	VIT0009318	SPACER WASHER
31	VIT0009317	BEARING
32	GUA0001007	V RING GASKET VA16
33	VIT0007011	SET SCREW 4X4
34	Z0250014071	NUT M8
N	Z0250008132CL	§ COFFEE OUTLET PIPE
100	Z0250014000CL	COFFEE BREWER VARIFLEX D 45

www.rheavendors.com tel: 0039 02 966 551 fax: 0039 02 96 55 086 email: rheavendors@rheavendors.com exclusive property of rheavendors group

PROFESSIONAL BREWER GROUP D.36

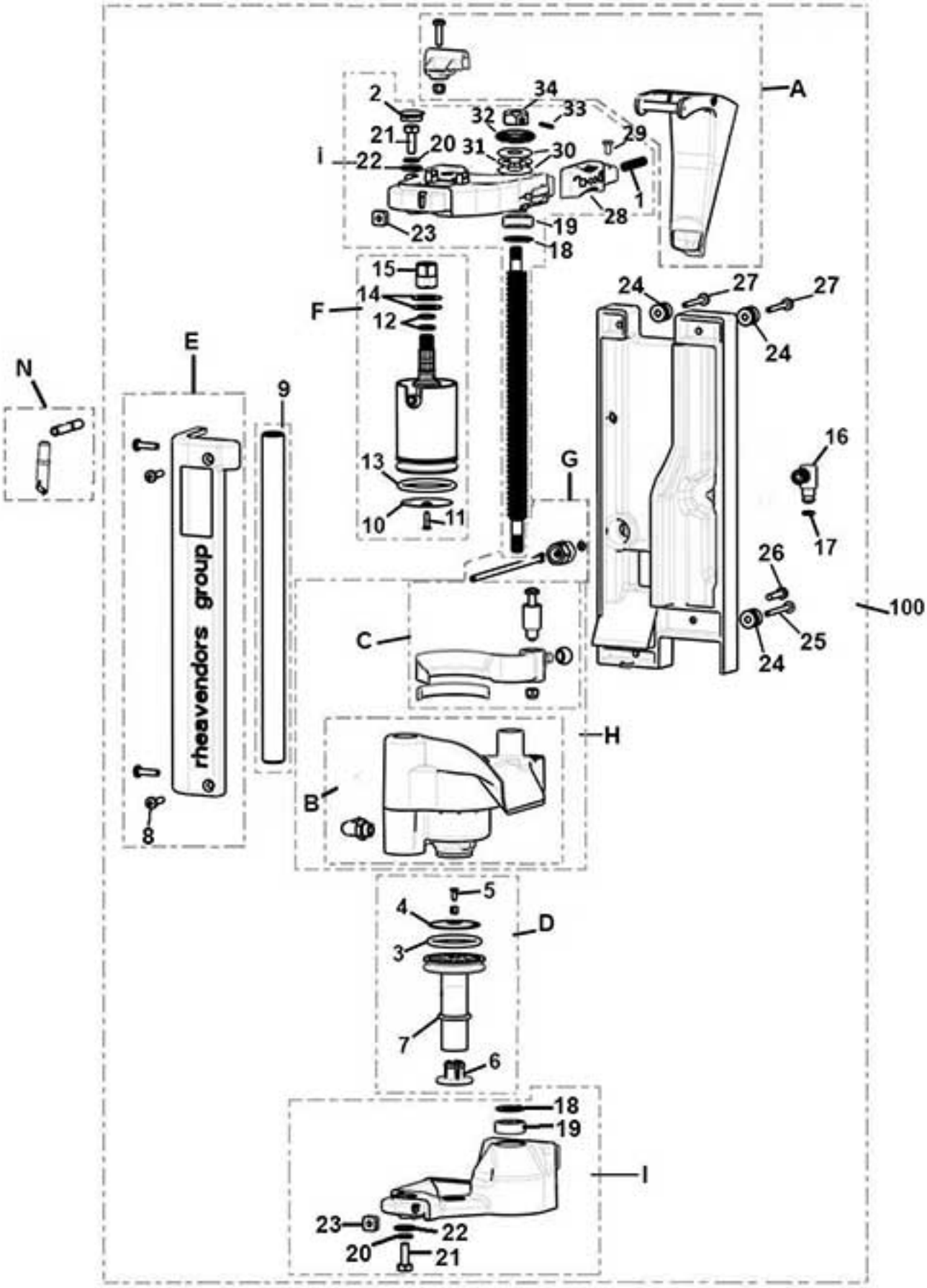

www.rheavendors.com tel: 0039 02 966 551 fax: 0039 02 96 55 086 email: rheavendors@rheavendors.com exclusive property of rheavendors group

PROFESSIONAL BREWER GROUP D.36		
Pos.	**Code**	**Description**
A	Z0250014033R	§ CHUTE D. 36
1	Z0250014081	SPRING
2	GUA0011022	PLUG
B	Z0250014032R	§ INFUSION CHAMBER D.36 included internal components and elbow
C	Z0250014034R	§ BRUSH D.36
D	Z0250014038R	§ LOWER FILTER HOLDER D.36
3	GUA0000080	OR 4112 RED SILICONE LSR70
4	Z0250008019	COFFEE FILTER
5	VIT0000121	SCREW COUNT FLAT HEAD M3X8
6	Z0250014027R1	LOWER PISTON LOCK+SET SCREW
7	GUA0000103	OR 3075 SILICON
E	Z0250014019R	§ FRONTAL COVER
8	VIT0001009	SCREW HEAD TAP CAP M4X16
9	Z0250014013	
F	Z0250014040R	§ UPPER FILTER HOLDER D.36
10	Z0250008099	COFFEE FILTER 33,4
11	VIT0000129	SCREW COUNT HEAD M3X12
12	GUA0000045	OR 108 VITON 80 BLACK
13	GUA0000080	OR 4112 RED SILICONE LSR70
14	Z0250014048	SPRING
15	Z0250014086	NUT
16	Z0250014085	MALE CONNECTOR
17	GUA0000004	OR 104 NBR AL 75 BLACK
G	Z0250014086R	§ WATER INLET TUBE 0,15 mt
H	Z0250014030R	§ CHAMBER D.36
I	Z0250014005R2	§UPPER SUPPORT WITHOUT CHUTE
L	Z0250014012R	§ LOWER SUPPORT
18	Z0250014077	SPACER
19	VIT0009320	BEARING
20	VIT0003113	SPRING WASHER 6,4
21	VIT0000249	SCREW HEX HEAD M6X16
22	Z0250014079	WASHER D.15 D.6,5 SP.1,5
23	VIT0009112	NUT M4
24	Z0250014072	PIN
25	VIT0000033	SCREW HEAD TAP CAP M4X35
26	VIT0001011	SCREW HEAD TAP CAP M4X20
27	VIT0001006	SCREW HEAD TAP CAP M4X30
28	Z0250014082	BREWER STOPPER BUTTON
29	VIT0002009	SCREW ST HEAD CAP M3.5X6.5
30	VIT0009318	SPACER WASHER
31	VIT0009317	BEARING
32	GUA0001007	V RING GASKET VA16
33	VIT0007011	SET SCREW 4X4
34	Z0250014071	NUT M8
N	Z0250008132CL	§ COFFEE OUTLET PIPE
100	Z0250014060CL	§ COFFEE BREWER VARIFLEX D.36

www.rheavendors.com tel: 0039 02 966 551 fax: 0039 02 96 55 086 email: rheavendors@rheavendors.com exclusive property of rheavendors group

horizontal grinder

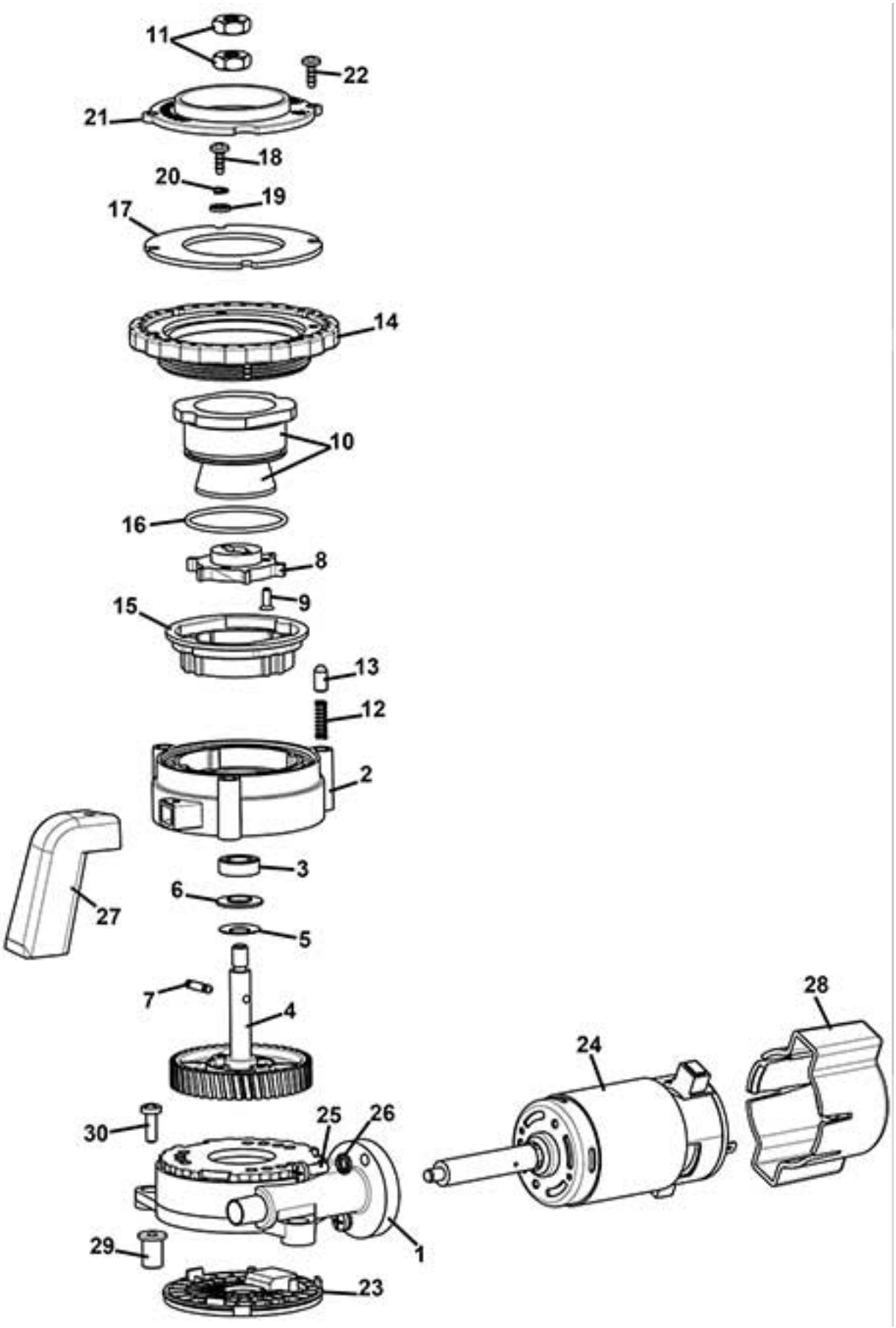

www.rheavendors.com tel: 0039 02 966 551 fax: 0039 02 96 55 086 email: rheavendors@rheavendors.com exclusive property of rheavendors group

horizontal grinder		
Pos.	**Code**	**Description**
1	Z0320001639NAR	§ MOTOR SUPPORT BLACK+PLUG
2	Z0320001602NAR	GRINDER BLADES SUPPORT
3	VIT0009325	BEARING
4	Z0320001608R	§ WHEEL+SHAFT+MAGNETS
5	Z0320001629	CUP SPRING 16x8,2 SP. 0,4
6	Z0320001625	BUSH
7	Z0320001704	GRINDER ROTATION PIN REINFORCE
8	Z0320001636	EJECTOR
9	VIT0000121	SCREW COUNT FLAT HEAD M3X8
10	Z0320001680	CONIC BLADES PLUS
11	Z0320001642	LOWER GRINDER FIXING NUT
12	Z0320001643	SPRING D.4X15X0,6
13	Z0320001624	REGULATION PIN
14	Z0320001605NAR	§ REGULATION RING NUT BLACK
15	Z0320001635-03NA	GRINDER SUPPORT BLACK
16	GUA0000124	SILICONE OR 2137
17	Z0320001622	UPPER GRINDER FIXING
18	VIT0002469	SCREW HEAD TAP M3.5X10
19	Z0320001666	SPACER D.4x7x2
20	VIT0003103	SPRING WASHER 4,3
21	Z0320001607NA	DUCT BLACK
22	VIT0002469	SCREW HEAD TAP M3.5X10
23	Z0320001604NA	PLUG BLACK
24	Z0090003047	GRINDER MOTOR 230V DC
25	VIT0000013	SCREW HEAD TAP CAP M4X12
26	VIT0003103	SPRING WASHER 4,3
27	Z0320001612NA	COFFEE POWDER CHUTE BLACK
28	Z0320001615NA	GRINDER SENSOR COVER BLACK
29	Z0320001628	NO-VIBRATION BUSH
30	VIT0000013	SCREW HEAD TAP CAP M4X12
100	Z0320001600CLAL	§ GRINDER PLUS-VARIFLEX BREWER

www.rheavendors.com tel: 0039 02 966 551 fax: 0039 02 96 55 086 email: rheavendors@rheavendors.com exclusive property of rheavendors group

products container

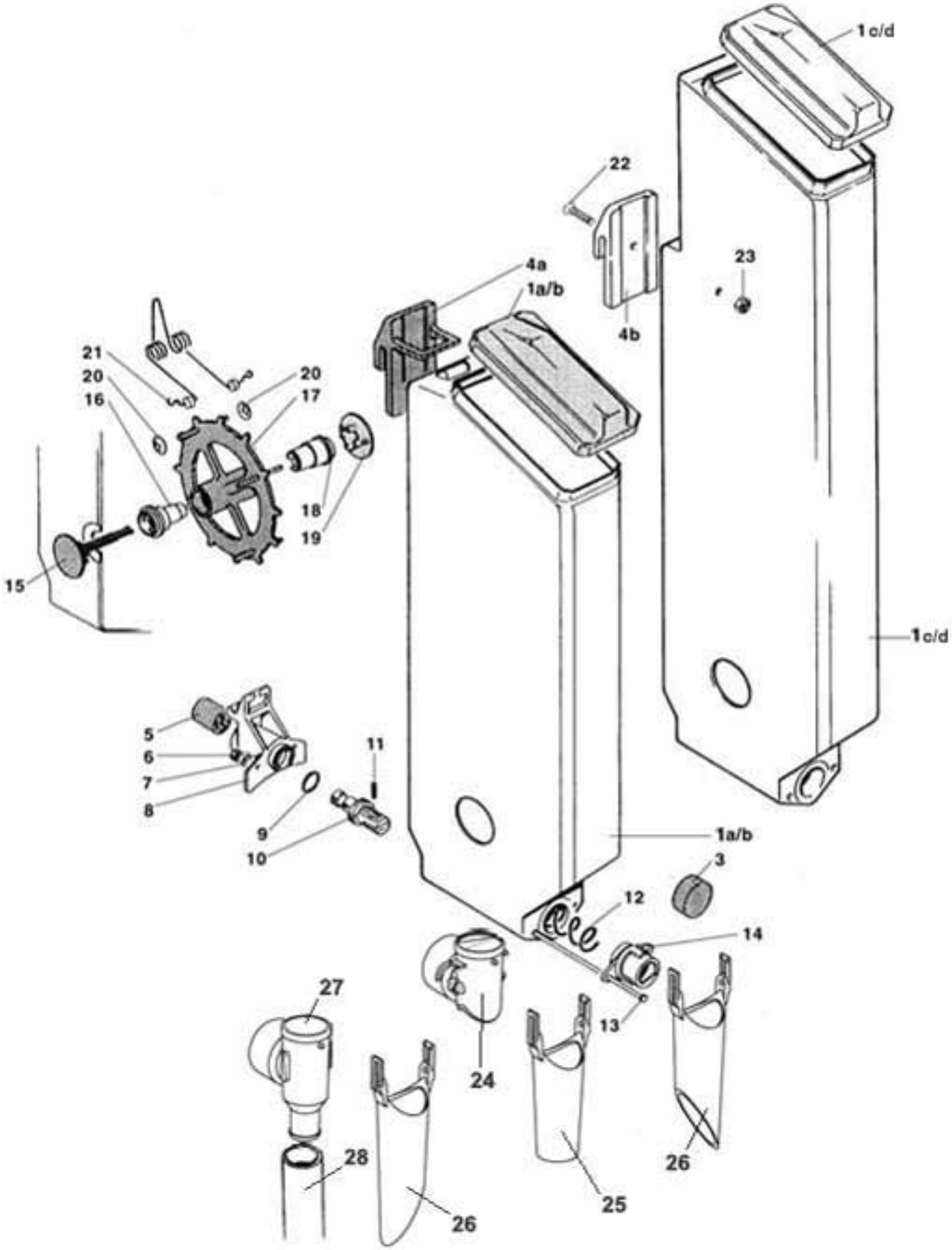

www.rheavendors.com tel: 0039 02 966 551 fax: 0039 02 96 55 086 email: rheavendors@rheavendors.com exclusive property of rheavendors group

products container		
Pos.	**Code**	**Description**
1/a	70003001AR	§ CANISTER "A"+LID
1/b	70003001BR	§ CANISTER "B"+LID
1/c	Z0230008003AR	§ CANISTER W/HOLE H.650+LID
1/d	Z0230008003BR	§ CANISTER W/O HOLE H.650+LID
3	4002050109AD	INGREDIENT CHUTE PLUG
4/a	70003003	FIX PLATE
4/b	Z0230012018	FIX PLATE
5	Z0230012012	SQUARED PINION
6	VIT0004803	NUT M4
7	VIT0003202	WASHER 4,3X9X0,8
8	70003006	REAR BUSH
9	GUA0000015	OR 119 NBR AL 75 BLACK
10	Z0230012006	SPIRAL WITH FLANGE
11	VIT0005106	PIN 2X14
12/a	70003016	SPIRAL 18
12/b	Z0230024009	SPIRAL 9
13	70003010	BUSH CONNECTOR
14/a	70003008	FRONT BUSH
14/b	70003007	FRONT BUSH
14/c	Z0230012025	FRONT BUSH-REDUCED TRANSITION
15	70003028	PIN
16	70003027	BUSH
17	70003012	WHEEL (PLASTIC)
18	70003026	BUSH
19	70003029	DISK
20	VIT0007102	BENZING CLIP
21	11837	PRODUCT AGITATOR
22	VIT0001205	SCREW COUNT FLAT HEAD M4X12
23	VIT0004810	NUT M4
24	Z0230030302IC	INGRED.CHUTE CONNECTOR RAL2011
25	Z0232300041R3	§INGREDIENT CHUTE-FRONTAL
26/a	Z0230030304R3	§ INGREDIENT CHUTE-LEFT ORANGE
26/b	Z0230030305R3	§ INGRED. CHUTE-RIGHT ORANGE
27	Z0230016024	SUGAR CHUTE
28/a	TSIL15/19T-10	SILICON HOSE 15X19 MT.10
100	Z0230016005R	§ CANISTER SPIRAL 18
101	Z0230016006R	§ CANISTER SPIRAL 9
102	Z0230017007R	§ CANISTER WHEEL 9
103	Z0230017008R	§ CANISTER WHEEL 18
104	Z0230018009R	§ CANISTER AGITATOR 18
105	Z0230019005R	§ CANISTER AGITATOR 9-THE
106	Z0230019006R	§ CANISTER AGITATOR 18-THE
107	Z0230012012R	§ SQUARED PINION

www.rheavendors.com tel: 0039 02 966 551 fax: 0039 02 96 55 086 email: rheavendors@rheavendors.com exclusive property of rheavendors group

1 grinder coffee beans container

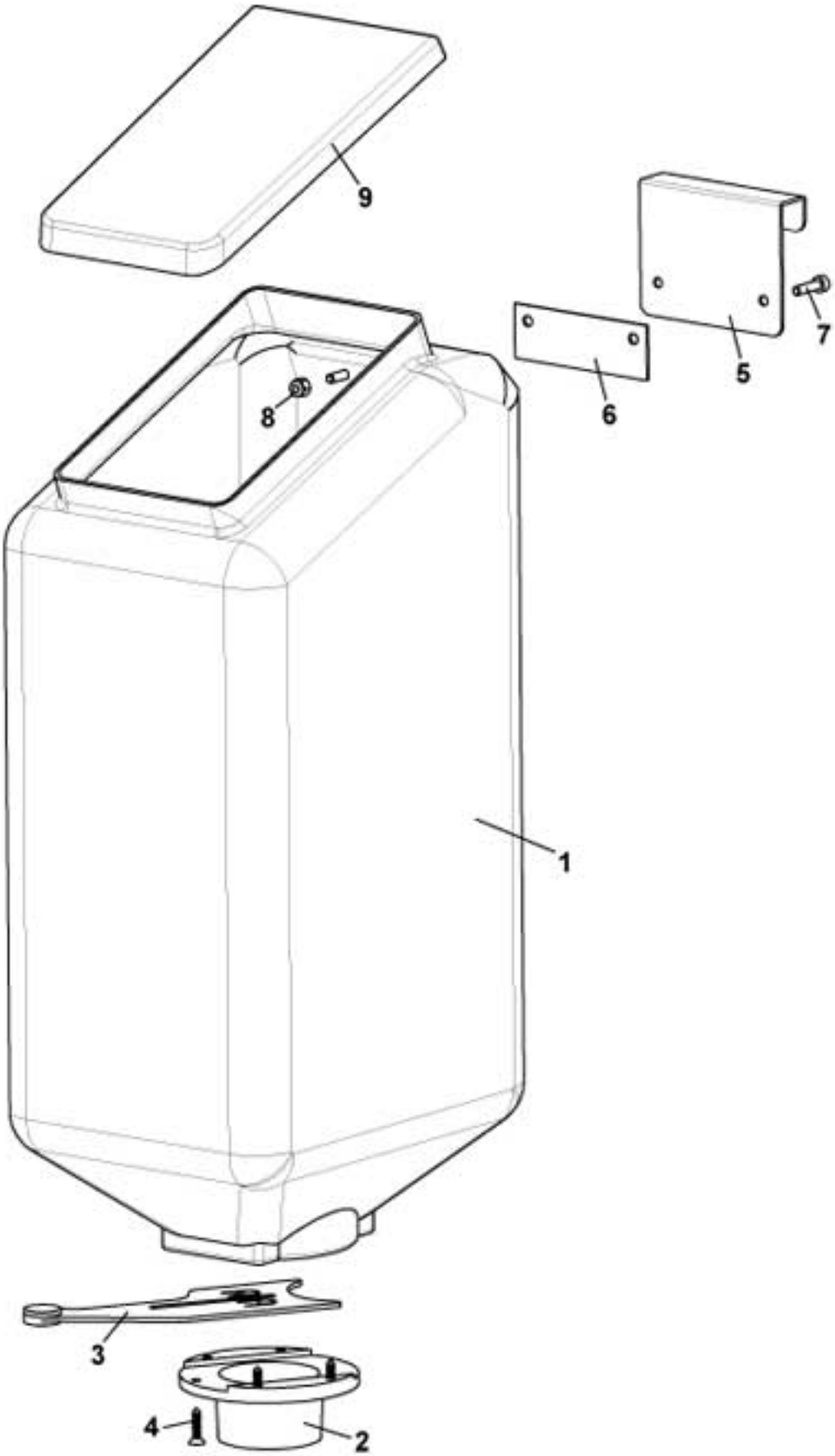

www.rheavendors.com tel: 0039 02 966 551 fax: 0039 02 96 55 086 email: rheavendors@rheavendors.com exclusive property of rheavendors group

1 grinder coffee beans container		
Pos.	**Code**	**Description**
1	Z0230030481R	§ COFFEE BEANS HOPPER 6KG pos. 1 + 9
2	Z0230030449NA	COFFEE BEANS HOPPER STOPPER
3	Z0230015207IC	COFFEE BEANS HOPPER STOPPER
4	VIT0002104	SCREW COUNT FLAT HEAD M3.9X16
5	Z0230030429	COFFEE CONTAINER CONNECTION
6	Z0230030426	PLATE
7	VIT0005519	SCREW TCEI 4x12 STAIL STEEL
8	VIT0004810	NUT M4
9	Z0230015057	COFFEE BEANS HOPPER LID
100	Z0230030415R7	§ COFFEE BEANS HOPPER 6 KG

www.rheavendors.com tel: 0039 02 966 551 fax: 0039 02 96 55 086 email: rheavendors@rheavendors.com exclusive property of rheavendors group

control panel

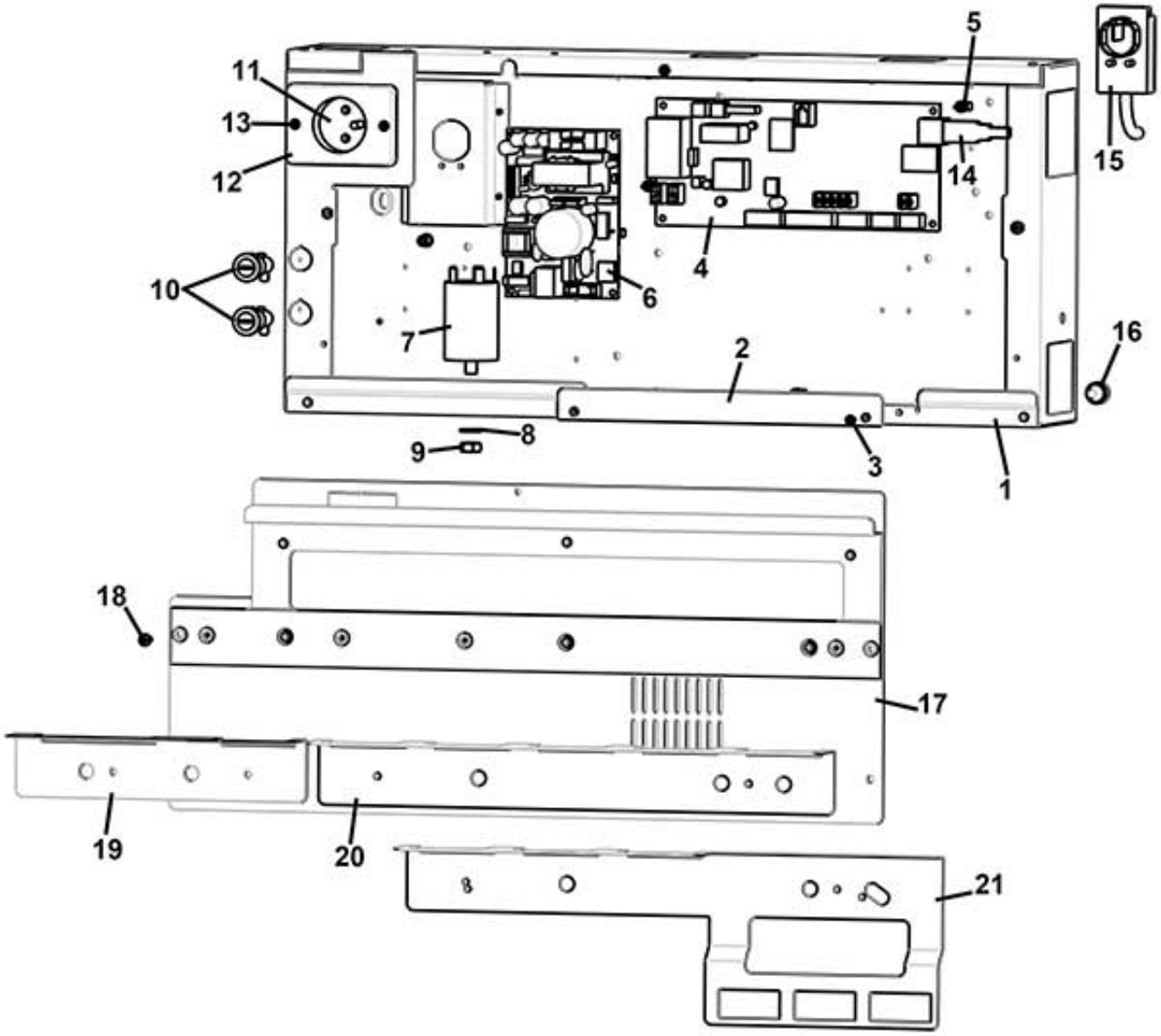

www.rheavendors.com tel: 0039 02 966 551 fax: 0039 02 96 55 086 email: rheavendors@rheavendors.com exclusive property of rheavendors group

control panel		
Pos.	**Code**	**Description**
1	Z013A003025-01	ELECTRIC PANEL
2	Z013A003032	STOPPER COVER
3	VIT0000003	SCREW HEAD TAP CAP M3X8
4	BRD03003	POWER BOARD
5	ELE0062003	BOARD SUPPORT
6	SCHA161001	SWITCHING BOARD
7	ELE0009055	NOISE FILTER 16A
8	VIT0003106	WASHER D.8,2
9	VIT0004506	NUT M8
10	ELE0003507CL	FUSE HOLDER+FUSE 12A
11	ELE0002306	GW PLUG
12	ELE0002307	ELECTRIC SOCKET 2 POSITION
13	VIT0002004	SCREW ST HEAD CAP M3.5X13
14	ELT0030874	USB WIRING 1,5MT
15	ELE0055003CL	SUPPLY CABLE
16	GUA0011016	RUBBER FEET D.15 H 8,5
17	Z013A003009CL	§ELECTRIC PANEL PROTECTION
18	VIT0000012	SCREW HEAD TAP CAP M4X10
19	Z013A003016	INGREDIENT CANISTER SUPP. E 1M
20	Z013A003015	INGREDIENT CANISTER SUPPORT H5
21	Z013A003031	INGREDIENT CANISTER SUPPORT

www.rheavendors.com tel: 0039 02 966 551 fax: 0039 02 96 55 086 email: rheavendors@rheavendors.com exclusive property of rheavendors group