vending machine

file immagini/ricambi/copertine/rhfs1.touch21,5 i.jpg NOT exists!!!!!!

spare parts manual

www.rheavendors.com tel: 0039 02 966 551 fax: 0039 02 96 55 086 email: rheavendors@rheavendors.com exclusive property of rheavendors group

cabinet

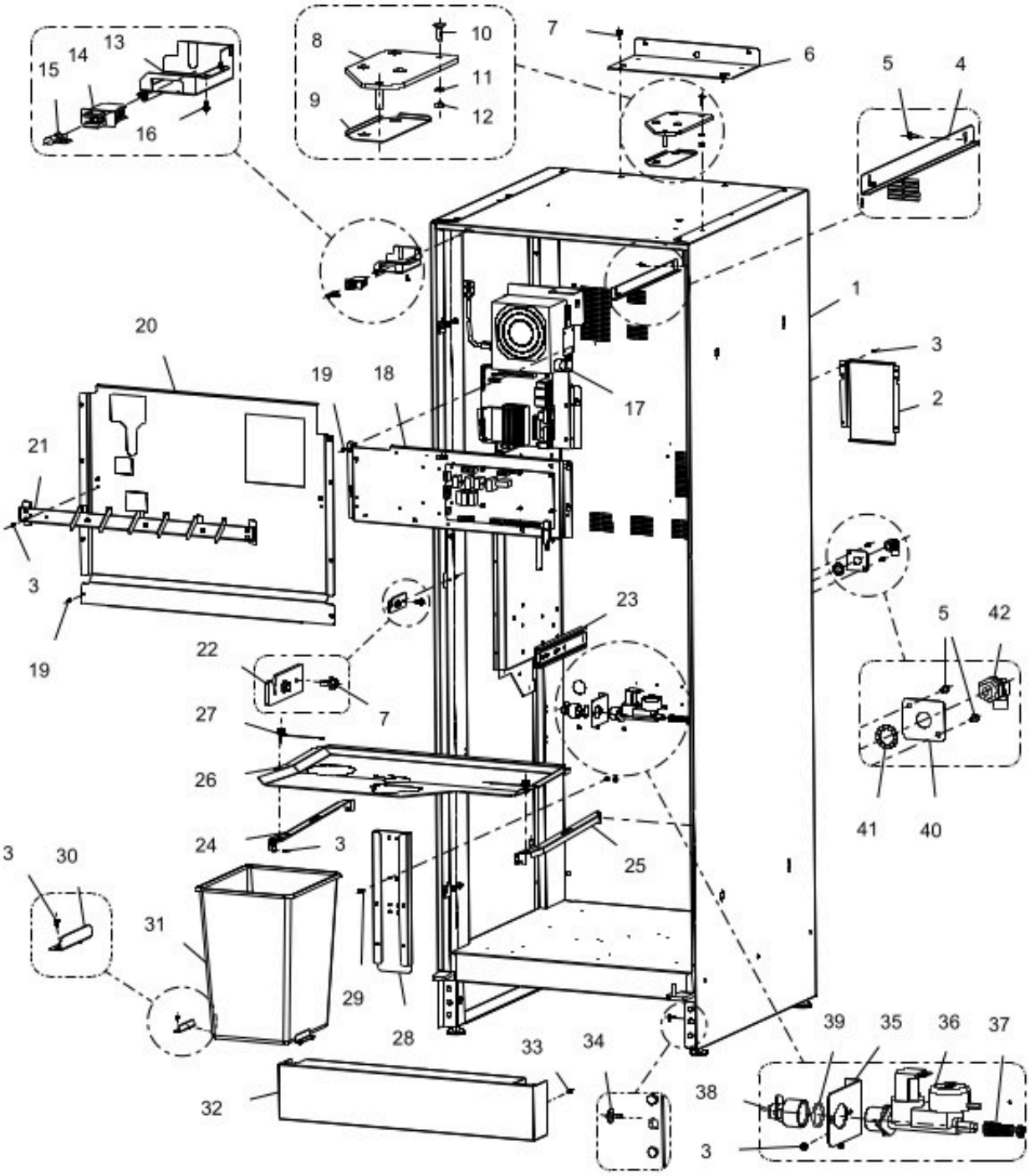

www.rheavendors.com tel: 0039 02 966 551 fax: 0039 02 96 55 086 email: rheavendors@rheavendors.com exclusive property of rheavendors group

cabinet		
Pos.	**Code**	**Description**
1	Z0012300212NACL	§ CABINET rhFS1 9005
2	Z0012300244NA	COVER BACK
3	VIT0002009	SCREW ST HEAD CAP M3.5X6.5
4	Z0012300217NA	WIRING GUIDE
5	VIT0000012	SCREW HEAD TAP CAP M4X10
6	Z0010018071	MACHINE FIXING PLATE
7	VIT0000236	SCREW HEX HEAD M6X11
8	Z001B170010NA	UPPER HINGE
9	Z001B170039NA	THICKNESS FOR UPPER HINGE
10	VIT0005802	SCREW 6X20
11	VIT0003453	SPRING WASHER 6,4
12	VIT0004505	NUT M6
13	Z001B170057NA	SUPP.INTER.SAFETY
14	ELE0002009	BIPOLAR SWITCH 15A 250V
15	Z0270011109CL	§ SERVICE KEY
16	VIT0002401	SCREW ST HEAD CAP M3.5X9.5
17		See table ELECTRONIC TOUCH SUPPORT
18		See table POWER BOARD SUPPORT
19	VIT0000011	SCREW HEAD TAP CAP M4X8
20	Z013B170012	TOUCH COVER ELECTRIC PANEL
21	Z001B170083CL1	CANISTER SUPPORT FS1 ISTANT
22	Z0010030015	LOCK HOOK
23	Z0070015144	TELESCOPICS GUIDE
24	Z0012300218	LEFT SHELF SUPPORT
25	Z0012300220	RIGHT SHELF SUPPORT
26	Z0012300222	PARTITION SHELF
27	Z040A158020	§ UNMISSABLE HANDLE
28	Z0010016027	FILTER SUPPORT
	Z0010016027CK	FILTER SUPPORT DUST GREY RAL 7037
29	VIT0000042	SCREW HEAD TAP CAPM5X16
30	Z001B170066NA	BUCKET GUIDE BRACKET
31	CON0000201	BIN
32	Z001B170046NA	FRONT PLINTH
33	Z0020018061	SELECTION BUTTON PLUG
34	Z0010030084	PIN
35	Z0070012111CK	INLET H2O VALVE SUP. RAL7037
36	Z0110001119	WATER INLET VALVE 24V DC
37	Z0010020063	NOZZLE SPRING D.7/11
38	Z0010019223	H2O INLET CONNECTOR 3/4F-3/8M
39	GUA0000021	OR 130 NBR AL 75 BLACK
40	Z0010030118	SUPPORT FITTING
41	VIT0003112	SPRING WASHER 17x26x1,2
42	Z0100001105	CONNECTOR

www.rheavendors.com tel: 0039 02 966 551 fax: 0039 02 96 55 086 email: rheavendors@rheavendors.com exclusive property of rheavendors group

CABINET CONTROL PANEL

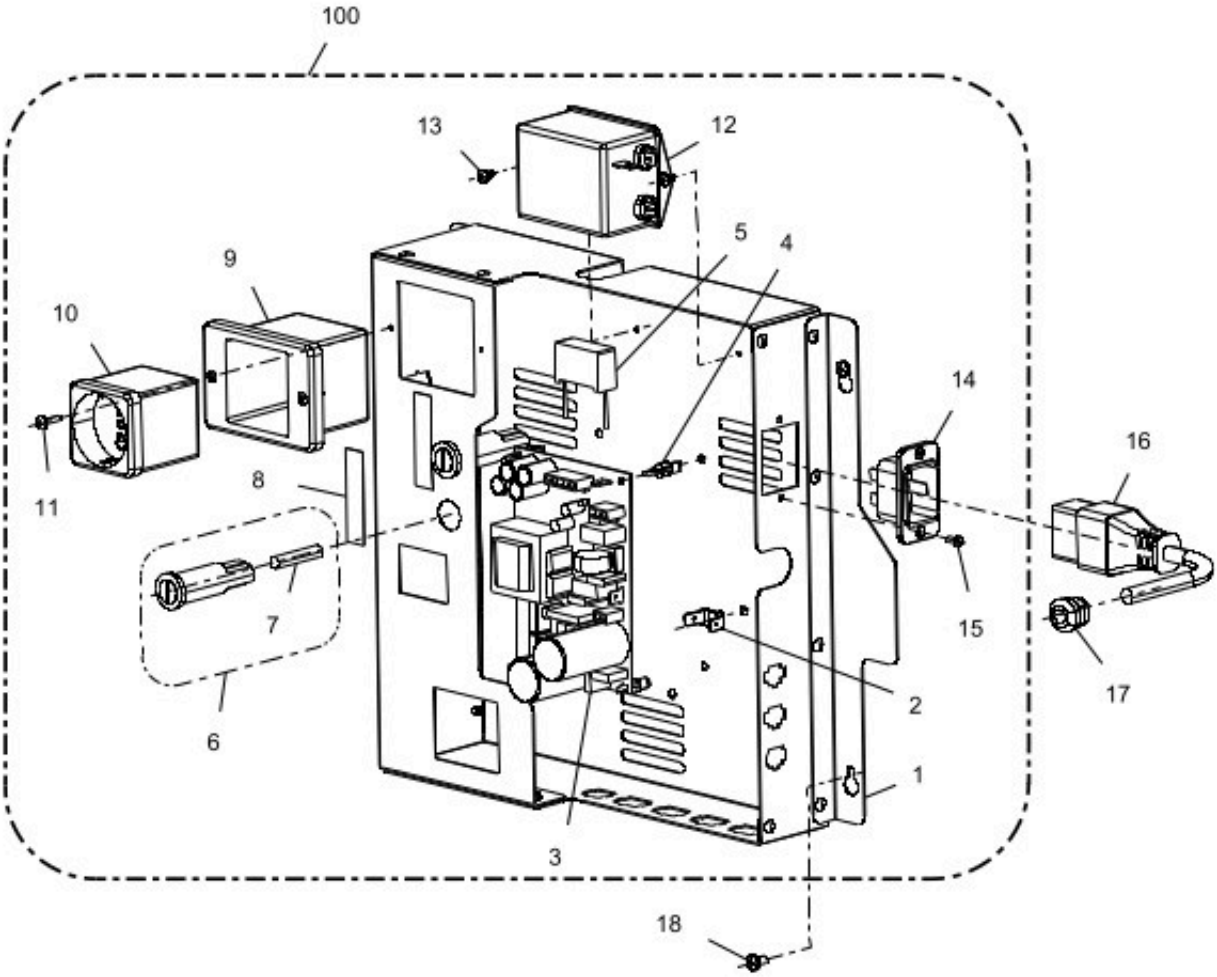

www.rheavendors.com tel: 0039 02 966 551 fax: 0039 02 96 55 086 email: rheavendors@rheavendors.com exclusive property of rheavendors group

CABINET CONTROL PANEL		
Pos.	**Code**	**Description**
1	Z013B170001	ELECTRIC PANEL
2	ELE0060520	GROUND PIN
3	SCHA161001	SWITCHING BOARD
4	ELE0062003	BOARD SUPPORT
5	ELT0001503CL	§ FILTER RC 220
6	ELE0003509CL1	FUSE HOLDER+FUSE 16A
7	ELE0003043	FUSE 6,3X32 16A
8	1010100212	FUSE F 16A LABEL
9	ELE0002307	ELECTRIC SOCKET 2 POSITION
10	ELE0002319	MAINS SOCKET SCHUKO
11	VIT0002004	SCREW ST HEAD CAP M3.5X13
12	ELE0009066	NOISE FILTER 16A
13	VIT0002009	SCREW ST HEAD CAP M3.5X6.5
14	ELE0002350	MAINS SOCKET 16A
15	VIT0002009	SCREW ST HEAD CAP M3.5X6.5
16	ELE0055054	SUPPLY CABLE+PLUG+SCHUK.SOCKET
18	H00021073	REOPENABLE PLAST CABLE LOCK
17	VIT0000011	SCREW HEAD TAP CAP M4X8
100	Z013B170001CL	§ ELECTRICAL PANEL

www.rheavendors.com tel: 0039 02 966 551 fax: 0039 02 96 55 086 email: rheavendors@rheavendors.com exclusive property of rheavendors group

ELECTRONIC TOUCH SUPPORT

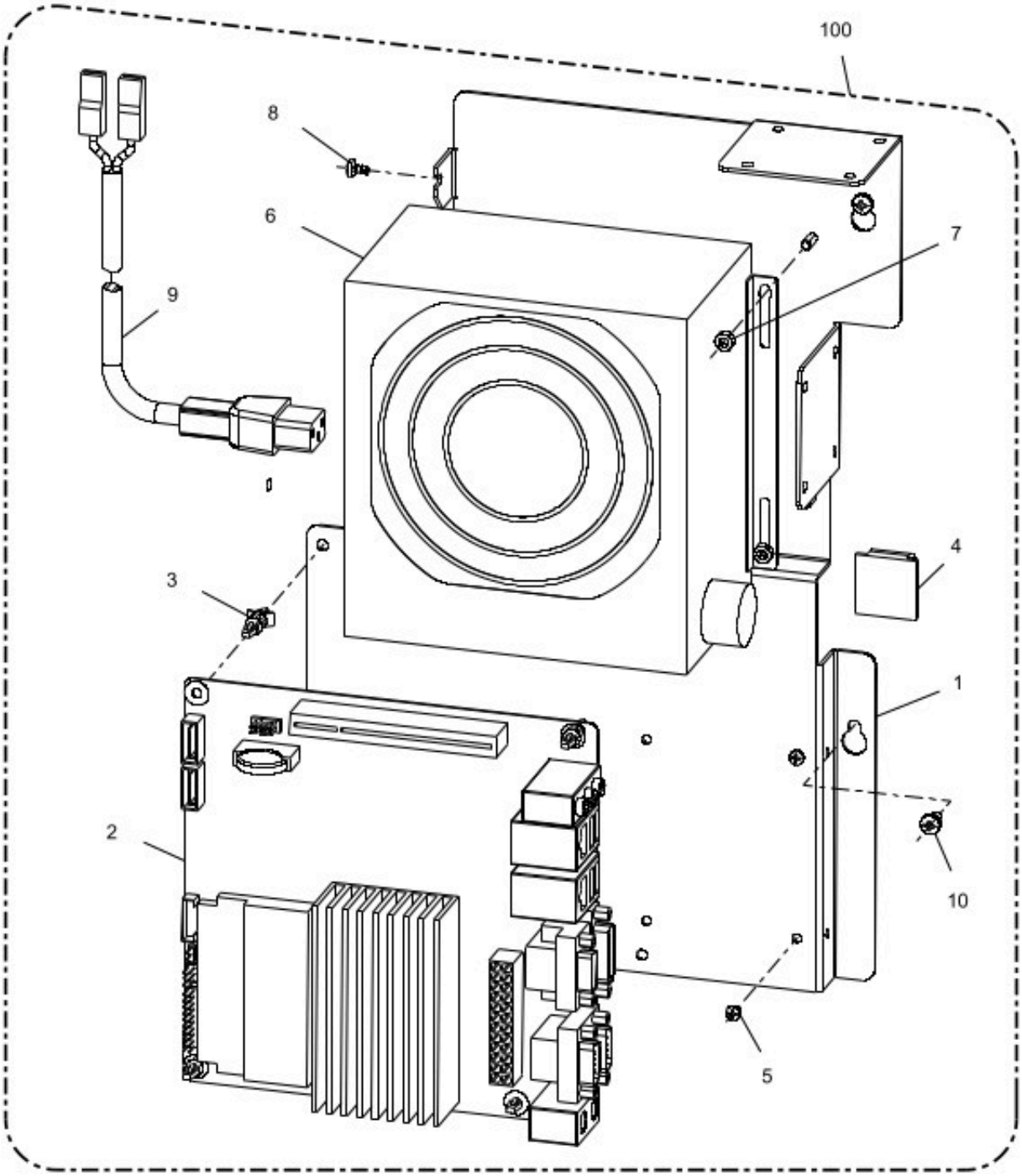

www.rheavendors.com tel: 0039 02 966 551 fax: 0039 02 96 55 086 email: rheavendors@rheavendors.com exclusive property of rheavendors group

ELECTRONIC TOUCH SUPPORT		
Pos.	**Code**	**Description**
1	Z013B170010	ELECTRONIC TOUCH SUPPORT
2	SCH0007783CL-04	MOTHERBOARD
3	ELE0062003	BOARD SUPPORT
4	ELE0062252	BIG ADESIVE STOP
5	VIT0000040	SCREW HEAD TAP CAP M3X4
6	ELE0030803	POWER SUPPLY 300W
7	VIT0004503	NUT M4
8	VIT0002009	SCREW ST HEAD CAP M3.5X6.5
9	ELE0055008CL1	POWER CABLE x ATX POWER SUPPLY
10	VIT0000011	SCREW HEAD TAP CAP M4X8
100	Z013B170010R1	§ ELECTRONICS TOUCH SUPPORT

www.rheavendors.com tel: 0039 02 966 551 fax: 0039 02 96 55 086 email: rheavendors@rheavendors.com exclusive property of rheavendors group

POWER BOARD SUPPORT

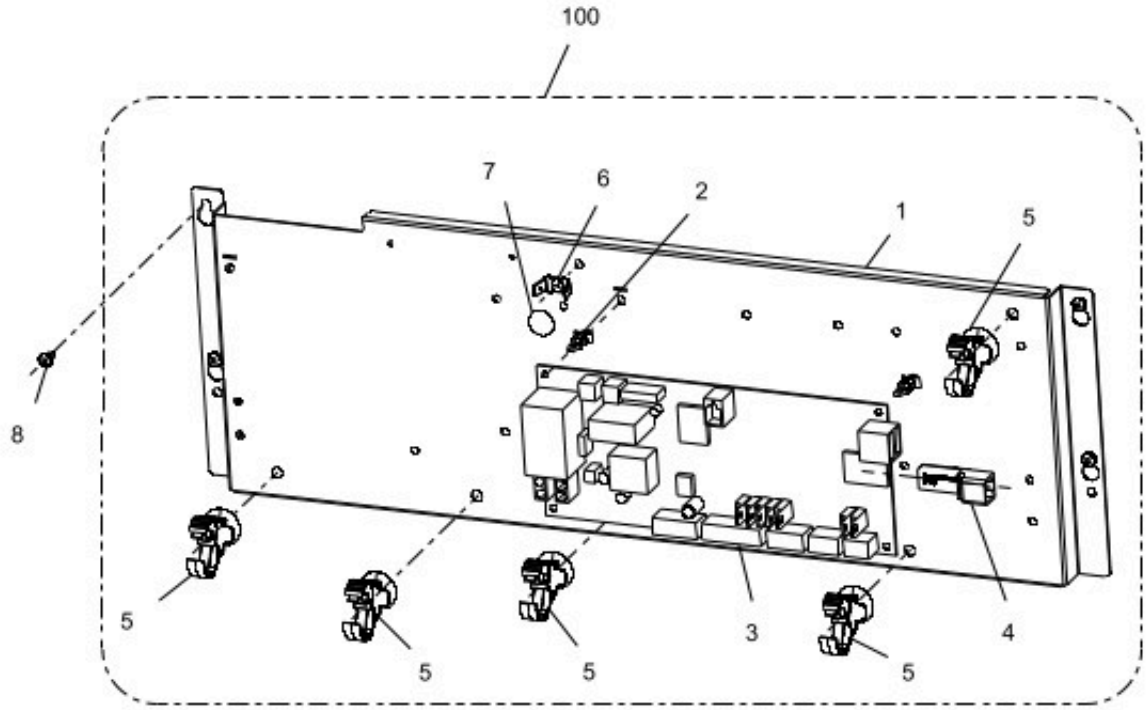

www.rheavendors.com tel: 0039 02 966 551 fax: 0039 02 96 55 086 email: rheavendors@rheavendors.com exclusive property of rheavendors group

POWER BOARD SUPPORT		
Pos.	**Code**	**Description**
1	Z013B170002	SUPPORT ELECTRONIC BOARD
2	ELE0062003	BOARD SUPPORT
3	BRD03003	POWER BOARD
4	SCHA158002	CONNECTION BOARD RHEAFLASH OUT
5	FASC000219	PIPE CLIP 1 WAY
6	ELE0060520	GROUND PIN
7	1010100111	GROUND WIRING LABEL
8	VIT0000011	SCREW HEAD TAP CAP M4X8
100	Z013B170002CL3	§ POWER BOARD SUPPORT

www.rheavendors.com tel: 0039 02 966 551 fax: 0039 02 96 55 086 email: rheavendors@rheavendors.com exclusive property of rheavendors group

solubles dispenser

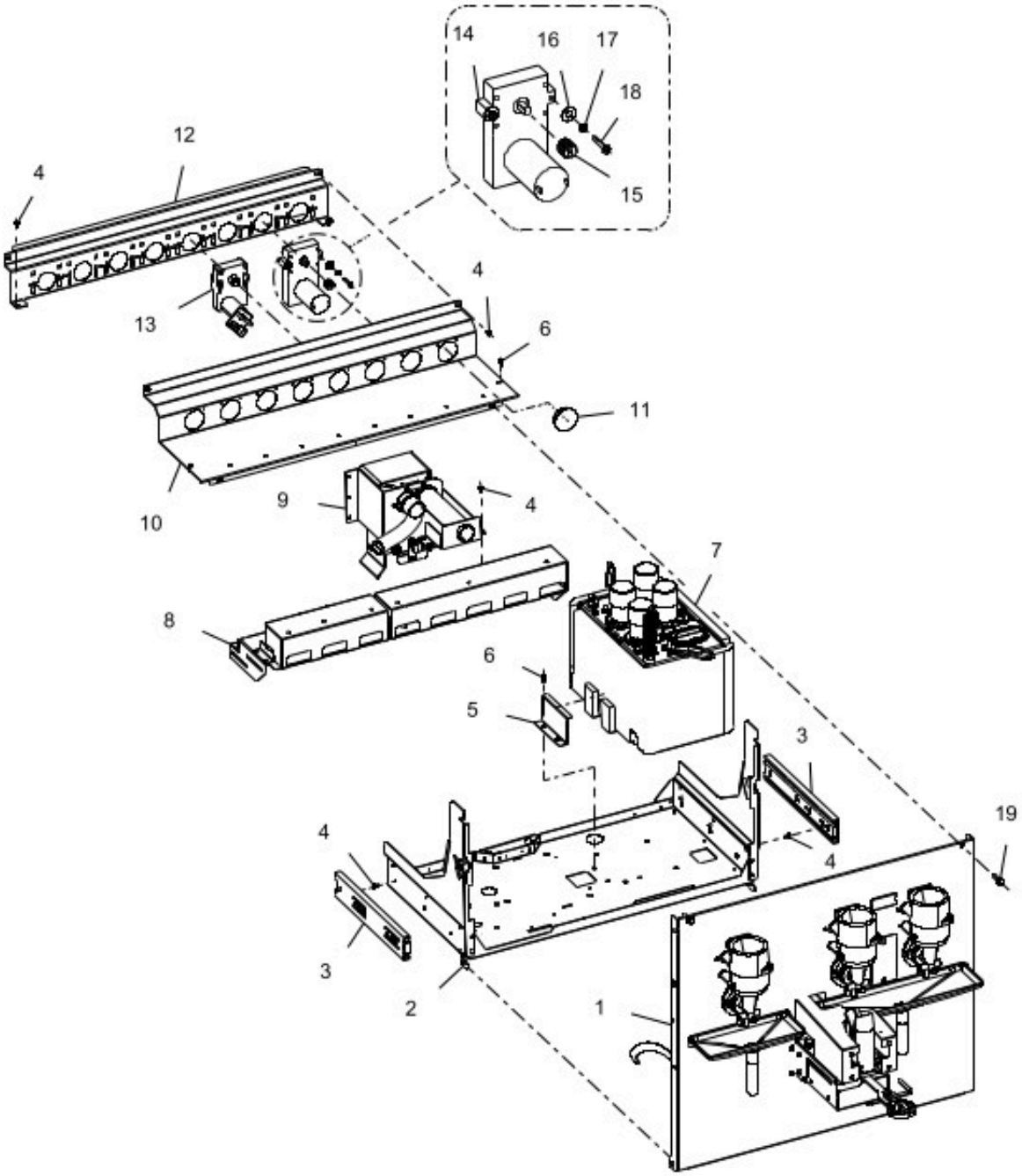

www.rheavendors.com tel: 0039 02 966 551 fax: 0039 02 96 55 086 email: rheavendors@rheavendors.com exclusive property of rheavendors group

solubles dispenser		
Pos.	**Code**	**Description**
1		See table mixer plan (instant version)
2	Z007B170088	HYDRAULIC PLAN
3	Z0070015144	TELESCOPICS GUIDE
4	VIT0000011	SCREW HEAD TAP CAP M4X8
5	Z007B170210	INSTANT BOILER MOUNTING BRACK.
6	VIT0000012	SCREW HEAD TAP CAP M4X10
7		See table INSTANT BOILER
8		See table ASPIRATION PLAN H
9		See table ASPIRATION FAN
10	Z007B170118	CANISTER PLAN I8
11	GUA0011005	RELEASE PLUG
12	Z007B170081	GEARMOTORS SUPPORT
13	Z0090002113R-01	§ GEARBOX MOTOR 24V DC+FILTER
14/a	Z0090002093	GEAR MOTOR 33 RPM 24V DC
14/b	Z0090002082	MOTOR 24 DC 55 RPM
14/c	Z0090002081	MOTOR 24 DC 85 RPM
15	Z0230012010	PINION
16	Z0090002079	SPACER
17	VIT0003103	SPRING WASHER 4,3
18	VIT0000015	SCREW HEAD TAP CAP M4X25
19	VIT0000264	SCREW M6X20+F.R. A2 DIN 6921

www.rheavendors.com tel: 0039 02 966 551 fax: 0039 02 96 55 086 email: rheavendors@rheavendors.com exclusive property of rheavendors group

mixer plan (instant version)

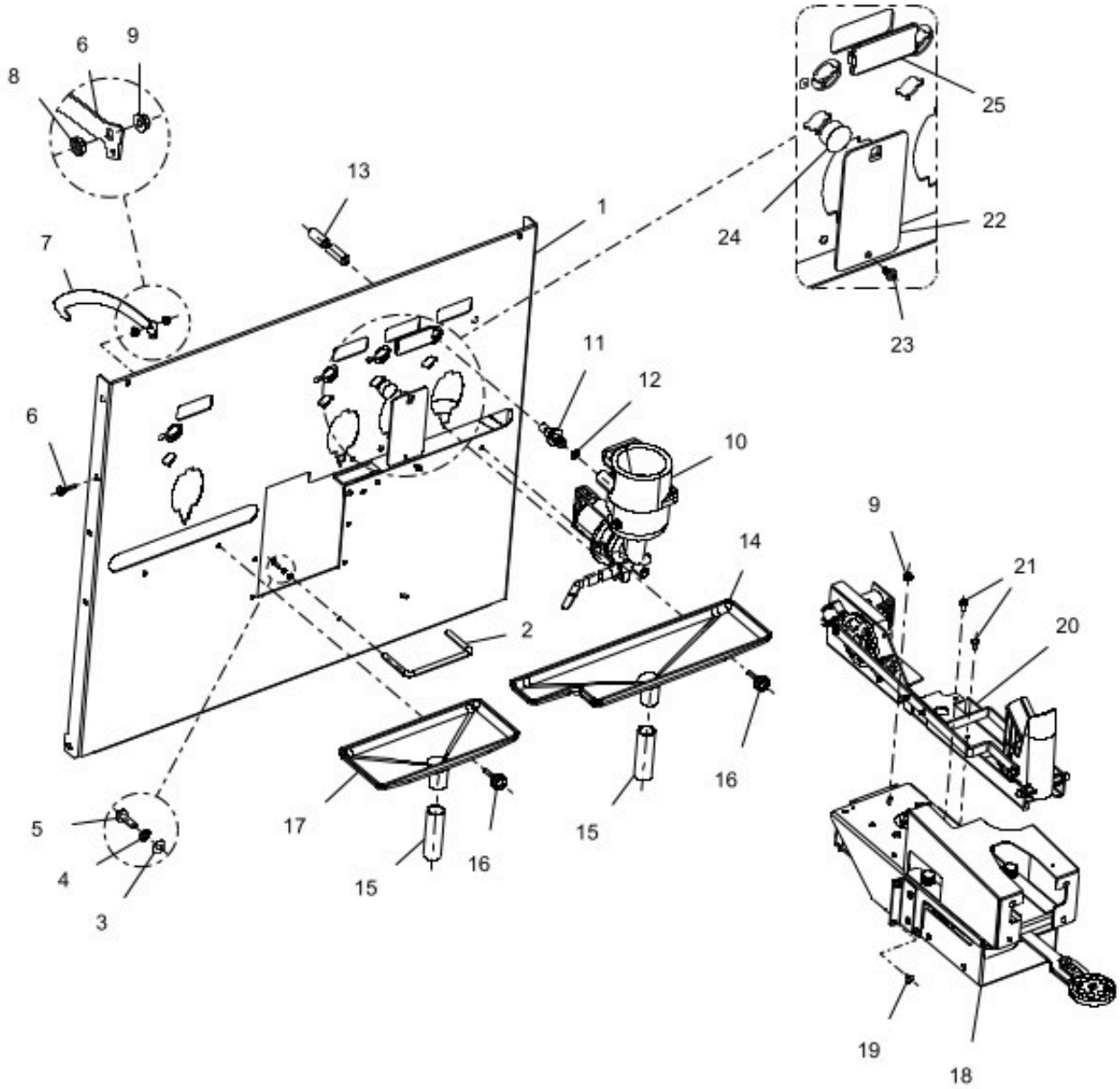

www.rheavendors.com tel: 0039 02 966 551 fax: 0039 02 96 55 086 email: rheavendors@rheavendors.com exclusive property of rheavendors group

mixer plan (instant version)		
Pos.	**Code**	**Description**
1/a	Z0072300039	MIXER SUPPORT rhFS1 I9R4
1/b	Z0072300046	MIXER SUPPORT rhFS1 I8R4
2	Z0070015143	BOTTOM EXTRACTABLE HANDLE
3	VIT0003002	WASHER 3,2X7X0,5
4	VIT0003102	SPRING WASHER 3,2
5	VIT0000004	SCREW HEAD TAP CAP M3X10
6	GUAA113001	BUMPER
7	Z007B170093	OPENING GUIDE
8	H66100008	SPACER
9	DAM0000056	NUT M4
10		See table mixer
11/a	Z0080100043-02PL	MIXER CONNECTOR-SHORT BLUE
11/b	Z0080100043-02MD	MIXER CONNECTOR-SHORT GREEN
11/c	Z0080100043-02IC	MIXER CONNECTOR-SHORT ORANGE
11/d	Z0080100043	MIXER CONNECTOR BLACK
11/e	Z0080100043-02KA	MIXER CONNECTOR-SHORT RED
12	GUA0000085	OR 106 RED SILICONE A70
13/a	TSIL06/09T-10	SILICON HOSE 6X9 MT.10
13/b	TSIL06/09T-50	SILICON HOSE 6X9 MT.50
14	Z007B170229NA	MIXER BOWL
15/a	TSIL15/19PG-10	SILICON HOSE 15X19 R5012 MT.10
15/b	TSIL15/19PG-50	SILICON HOSE 15X19 R5012 MT.50
16	VIT0009180	HANDLE
17	Z007B170075NA	MIXER BOWL
18		
19	VIT0000021	SCREW HEAD TAP CAP M4X6
20		See table SUGAR MOVEMENT
21	VIT0000204	SCREW HEX HEAD M4X8
22	Z0010020028NA	MIXER PLUG BLACK
23	VIT0002009	SCREW ST HEAD CAP M3.5X6.5
24	GUA0011010	PLUG
25	Z0070014776	TRAP PLUG

www.rheavendors.com tel: 0039 02 966 551 fax: 0039 02 96 55 086 email: rheavendors@rheavendors.com exclusive property of rheavendors group

PIPES MOVEMENT W/SUGAR MOVEMENT

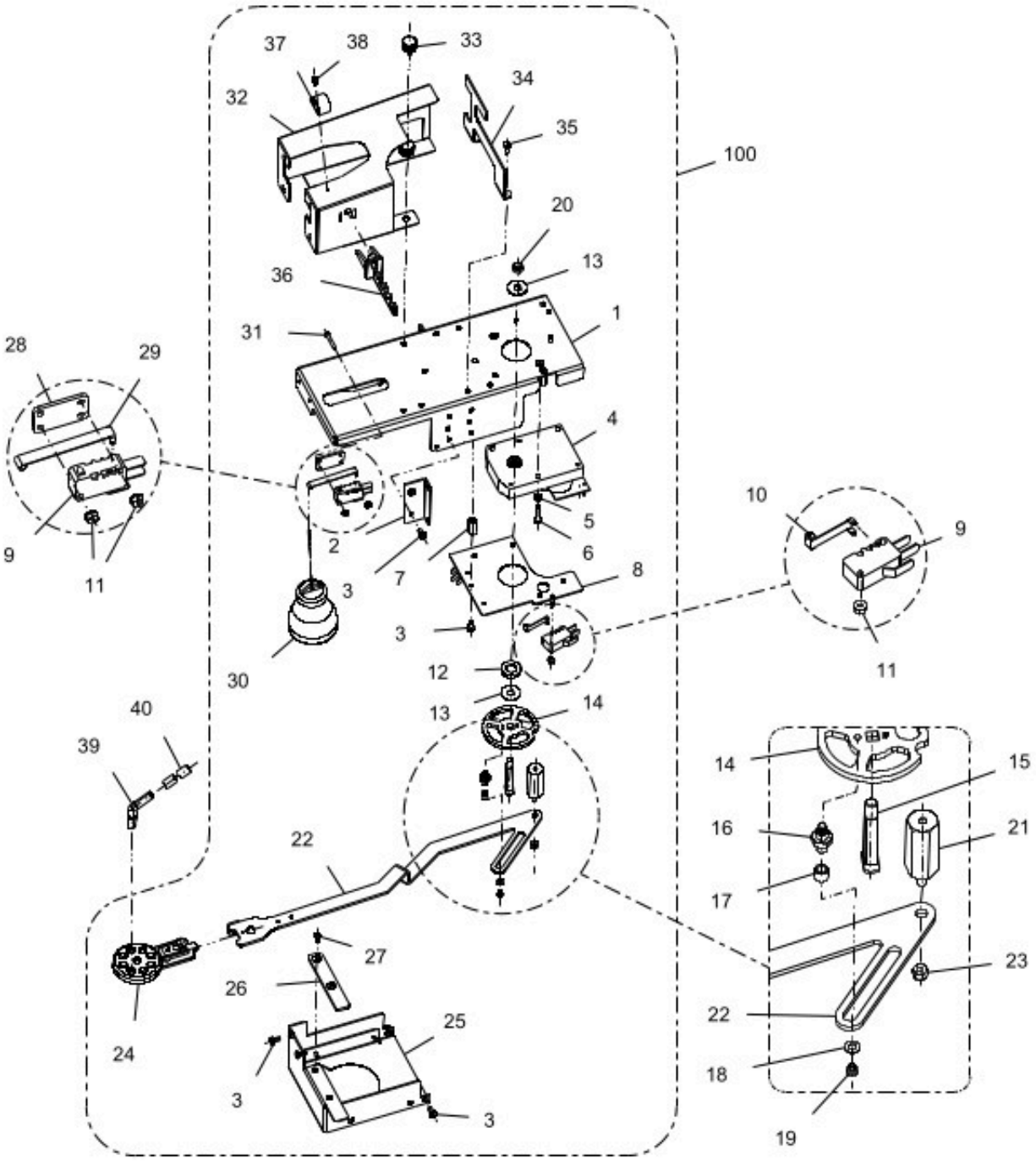

www.rheavendors.com tel: 0039 02 966 551 fax: 0039 02 96 55 086 email: rheavendors@rheavendors.com exclusive property of rheavendors group

PIPES MOVEMENT W/SUGAR MOVEMENT		
Pos.	**Code**	**Description**
1	Z0382300042	NOZZLE MOVEMENT SUPPORT PLATE
2	Z0382300065	MOUNTING BRACKET
3	VIT0000011	SCREW HEAD TAP CAP M4X8
4	Z0090002114R	§ GEARBOX MOTOR 11RPM 24V DC
5	VIT0003103	SPRING WASHER 4,3
6	VIT0000035	SCREW HEAD TAP CAP M4X20
7	Z038A158206	TIE ROD
8	Z0382300061	MICROSWITCH SUPPORT PLATE
9	ELE0001528	MICROSWITCH
10	ELE0001906	MICROSWITCH LEVER
11	VIT0004701	NUT M3
12	Z0380010831	BUSH 20x4
13	Z038A158110	MOTOR WASHER
14	Z0382300005	CAM
15	Z038A158203	MOTOR SHAFT
16	Z0382400022	CAM PIN STAINLESS STEEL
17	Z0382400024	SLIDING RING IN POM
18	VIT0003003	WASHER 4,3X8X0,8
19	VIT0000040	SCREW HEAD TAP CAP M3X4
20	VIT0004821	NUT M6
21	Z038A158214	ARM PIN
22	Z0382400026	STAINLESS STEEL PIPES MOVEMENT
23	VIT0004815	NUT M4
24	Z038A158002NA	NOZZLE SUPPORT
25	Z0382300063	BOTTOM ENCLOSURE
26	Z0382300013	ARM SLIDE
27	VIT0000106	SCREW COUNT FLAT HEAD M4X8
28	4600010014	SPACER
29	NL201106265	MICRO LEVER
30	Z0070020038CL3	§ WASTE FLOAT
31	VIT0000007	SCREW HEAD TAP CAP M3X20
32	Z0382300057	DISPENSER COVER
33	VIT0009168	KNURLED HANDLE
34	Z0382300045	FRONT COVER PLATE
35	VIT0000205	SCREW HEX HEAD M4X10
36	Z0080200127	MIXER TUBE SUPPORT
37	FASC000557	CLIP FOR CABLE D. 15,9
38	VIT0002009	SCREW ST HEAD CAP M3.5X6.5
39	Z038A158001NA	30° Ø6 DISPENSING NOZZLE
40/a	TSIL06/09PG-10	SILICON HOSE D6X9 R5012 MT.10
40/b	TSIL06/09PG-50	SILICON HOSE D6X9 R5012 MT.50
100	Z0382300064R	§ NOZZLE MOVEMENT W/FLOAT

www.rheavendors.com tel: 0039 02 966 551 fax: 0039 02 96 55 086 email: rheavendors@rheavendors.com exclusive property of rheavendors group

PIPES MOVEMENT W/O SUGAR MOVEMENT

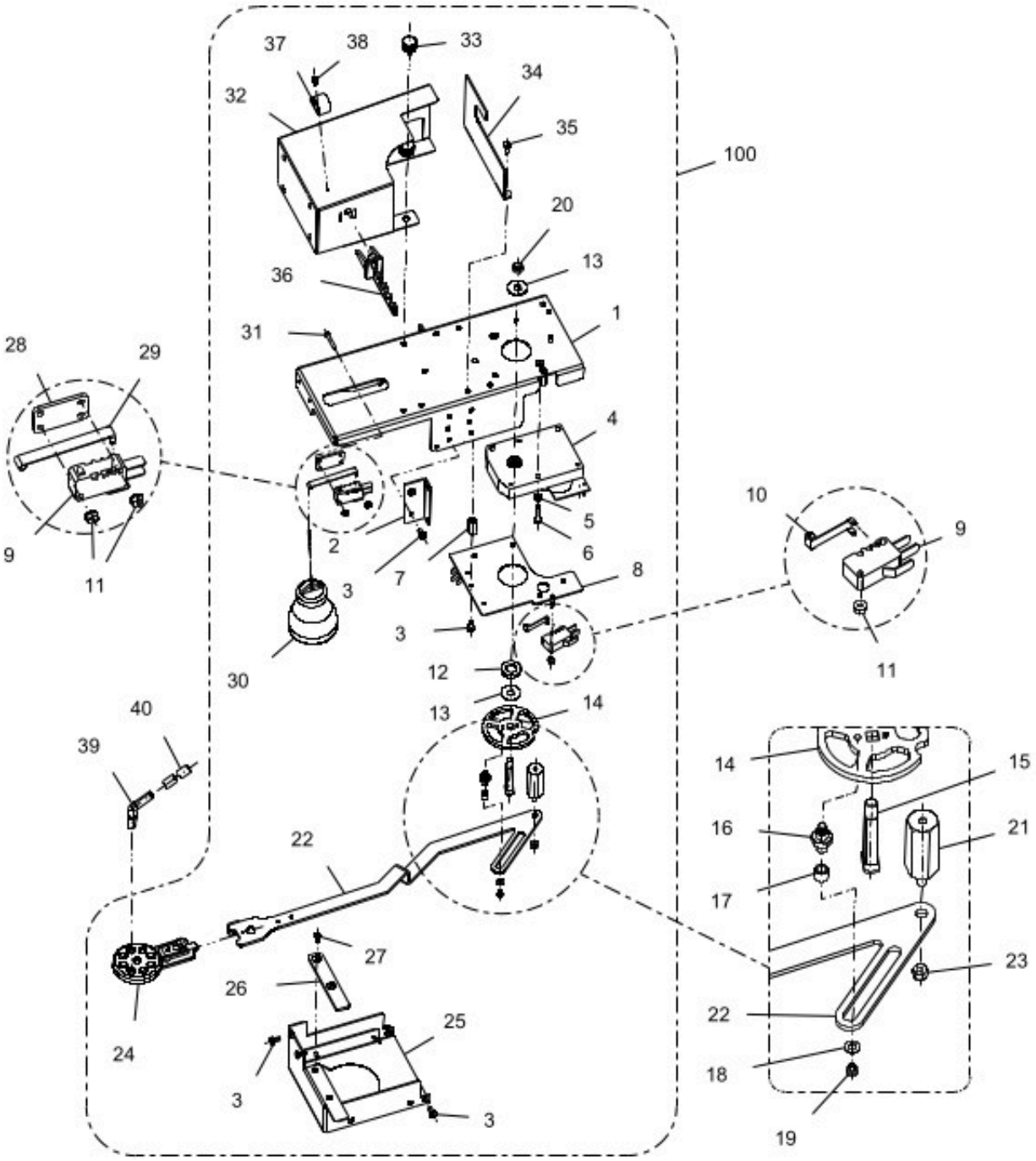

www.rheavendors.com tel: 0039 02 966 551 fax: 0039 02 96 55 086 email: rheavendors@rheavendors.com exclusive property of rheavendors group

PIPES MOVEMENT W/O SUGAR MOVEMENT		
Pos.	**Code**	**Description**
1	Z0382300042	NOZZLE MOVEMENT SUPPORT PLATE
2	Z0382300065	MOUNTING BRACKET
3	VIT0000011	SCREW HEAD TAP CAP M4X8
4	Z0090002114R	§ GEARBOX MOTOR 11RPM 24V DC
5	VIT0003103	SPRING WASHER 4,3
6	VIT0000035	SCREW HEAD TAP CAP M4X20
7	Z038A158206	TIE ROD
8	Z0382300061	MICROSWITCH SUPPORT PLATE
9	ELE0001528	MICROSWITCH
10	ELE0001906	MICROSWITCH LEVER
11	VIT0004701	NUT M3
12	Z0380010831	BUSH 20x4
13	Z038A158110	MOTOR WASHER
14	Z0382300005	CAM
15	Z038A158203	MOTOR SHAFT
16	Z0382400022	CAM PIN STAINLESS STEEL
17	Z0382400024	SLIDING RING IN POM
18	VIT0003003	WASHER 4,3X8X0,8
19	VIT0000040	SCREW HEAD TAP CAP M3X4
20	VIT0004821	NUT M6
21	Z038A158214	ARM PIN
22	Z0382400026	STAINLESS STEEL PIPES MOVEMENT
23	VIT0004815	NUT M4
24	Z038A158002NA	NOZZLE SUPPORT
25	Z0382300063	BOTTOM ENCLOSURE
26	Z0382300013	ARM SLIDE
27	VIT0000106	SCREW COUNT FLAT HEAD M4X8
28	4600010014	SPACER
29	NL201106265	MICRO LEVER
30	Z0070020038CL3	§ WASTE FLOAT
31	VIT0000007	SCREW HEAD TAP CAP M3X20
32	Z0382300059	DISPENSER COVER
33	VIT0009168	KNURLED HANDLE
34	Z0382300044	FRONT PLATE COVER
35	VIT0000205	SCREW HEX HEAD M4X10
36	Z0080200127	MIXER TUBE SUPPORT
37	FASC000557	CLIP FOR CABLE D. 15,9
38	VIT0002009	SCREW ST HEAD CAP M3.5X6.5
39	Z038A158001NA	30° Ø6 DISPENSING NOZZLE
40/a	TSIL06/09PG-10	SILICON HOSE D6X9 R5012 MT.10
40/b	TSIL06/09PG-50	SILICON HOSE D6X9 R5012 MT.50
100	Z0382300064R1	§ NOZZLE MOVEMENT W/FLOAT

www.rheavendors.com tel: 0039 02 966 551 fax: 0039 02 96 55 086 email: rheavendors@rheavendors.com exclusive property of rheavendors group

SUGAR MOVEMENT

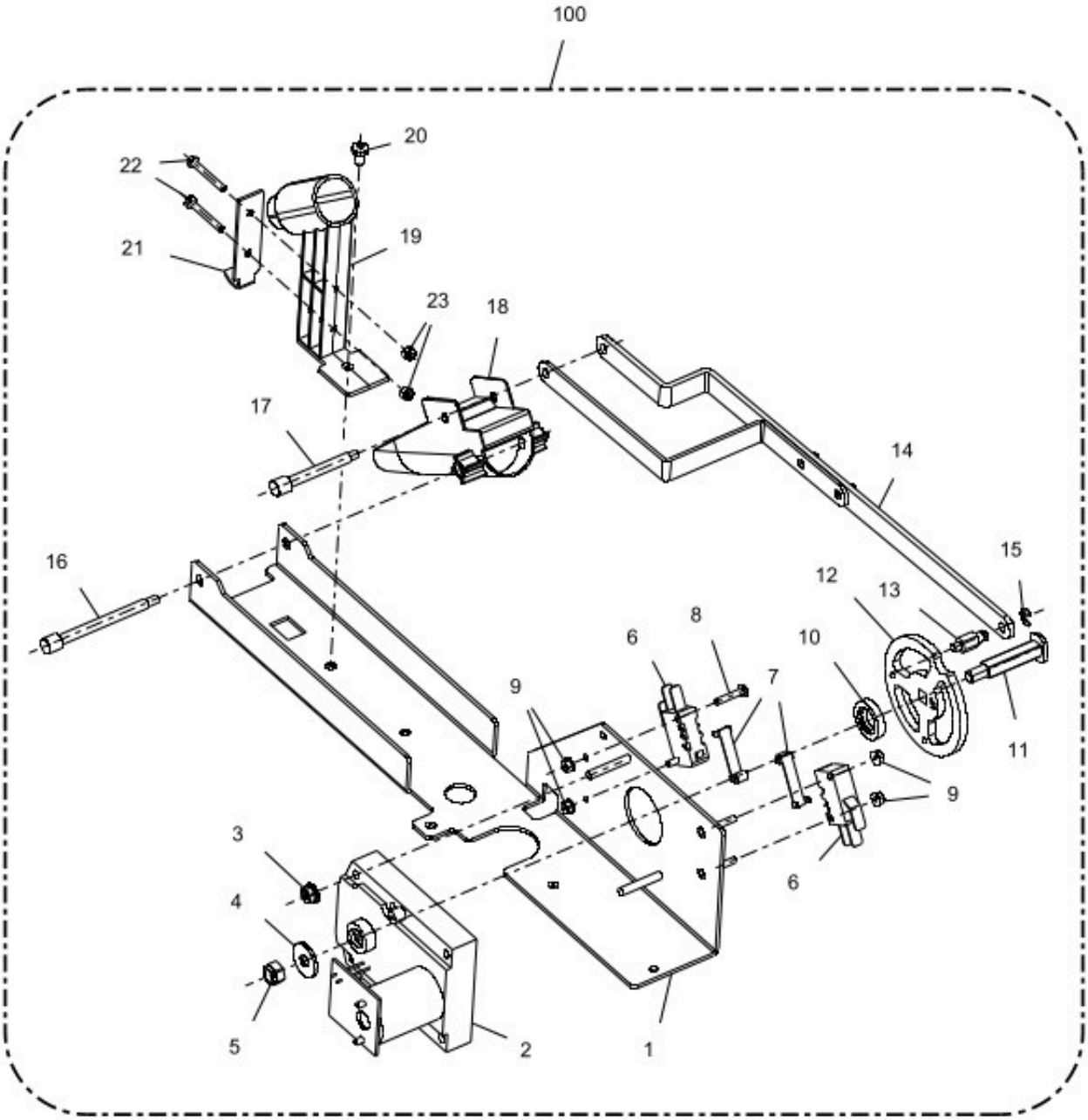

www.rheavendors.com tel: 0039 02 966 551 fax: 0039 02 96 55 086 email: rheavendors@rheavendors.com exclusive property of rheavendors group

SUGAR MOVEMENT		
Pos.	**Code**	**Description**
1	Z038A158301	SUGAR DISPENSER PLATE
2	Z0090002114R1	§ GEARBOX MOTOR 11RPM 24V DC
3	DAM0000056	NUT M4
4	VIT0003311	WASHER 6,6x18x1,5
5	VIT0004821	NUT M6
6	ELE0001528	MICROSWITCH
7	ELE0001906	MICROSWITCH LEVER
8	VIT0000006	SCREW HEAD TAP CAP M3X16
9	VIT0004701	NUT M3
10	Z0380010831	BUSH 20x4
11	Z038A158304	MOTOR SHAFT
12	Z0382300006	MICROSWITCH CAM
13	Z0382300001	MICROSWITCH CAM PIN
14	Z038A158309R	§ LEVEL
15	VIT0006503	RING 4
16	Z038A158305	KNURLED PIN
17	Z038A158310	KNURLED PIN
18	Z038A158003NA	TILTER
19	Z038A158077NA	SUGAR HOSE CONNECTOR
20	VIT0000011	SCREW HEAD TAP CAP M4X8
21	Z038A158075	SUGAR HOSE REINFORCEMENT
22	VIT0000008	M 3*25 TCB SCREW
23	VIT0004814	NUT M3
100	Z038A158300R	§ HOSE MOVER W/FLOAT

www.rheavendors.com tel: 0039 02 966 551 fax: 0039 02 96 55 086 email: rheavendors@rheavendors.com exclusive property of rheavendors group

mixer

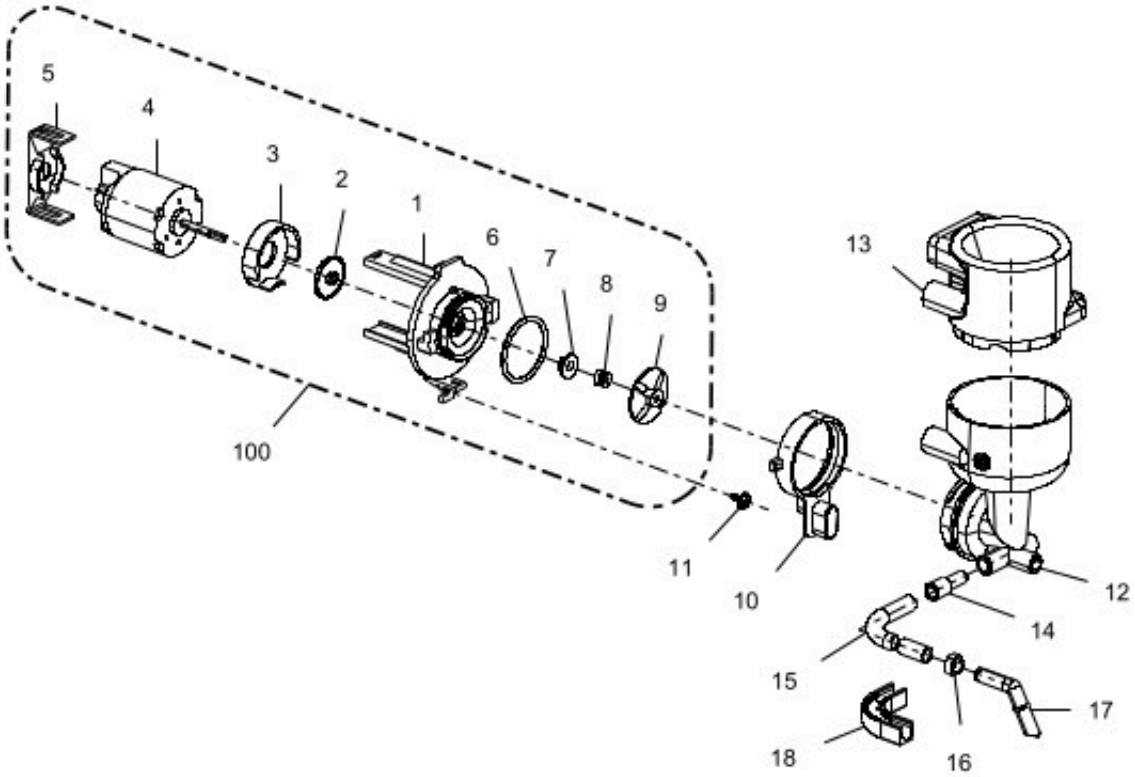

www.rheavendors.com tel: 0039 02 966 551 fax: 0039 02 96 55 086 email: rheavendors@rheavendors.com exclusive property of rheavendors group

mixer		
Pos.	**Code**	**Description**
1	Z0080100005	MOTOR MIXER BASE
2	Z0080100024	MIXER FAN
3	Z0080100023IC	MIXER COVER RAL2011
4	Z0090003023	MIXER MOTOR 24V DC SHAFT D.4
5	Z0080100009IC	MIXER MOTOR SUPPORT RAL2011
6	GUA0000084	OR 3131 RED SILICONE A60
7	Z0080100015	MIXER BUSH
8	Z0080100102	MIXER SHAFT GASKET
9	Z0080100011	MIXER FAN
10	Z0080100006IC	LOCK RING RAL2011
11	VIT0002401	SCREW ST HEAD CAP M3.5X9.5
12/a	Z0080200110LPG	MIXING BOWL L.W/H20 BREAKER
12/b	Z0080200111RPG	MIXING BOWL R.W/H20 BREAKER
13	Z0080100142PG	TRAP BODY D.4 RAL5012
14	Z0080100095PG	REDUCTION
15/a	TSIL06/09PG-10	SILICON HOSE D6X9 R5012 MT.10
15/b	TSIL06/09PG-50	SILICON HOSE D6X9 R5012 MT.50
16/a	Z0080100130	HOSE RING BLUE D.9
16/b	Z0080100129	HOSE RING GREEN D.9
16/c	Z0080100128	HOSE RING ORANGE D.9
16/d	Z0080100126	HOSE RING BLACK D.9
16/e	Z0080100127	HOSE RING RED D.9
17	Z038A158001NA	30° Ø6 DISPENSING NOZZLE
18	FASC000605	CLAMP
100	Z0080100001R	§ MIXER BOWL BASE+MOTOR

www.rheavendors.com tel: 0039 02 966 551 fax: 0039 02 96 55 086 email: rheavendors@rheavendors.com exclusive property of rheavendors group

INSTANT BOILER

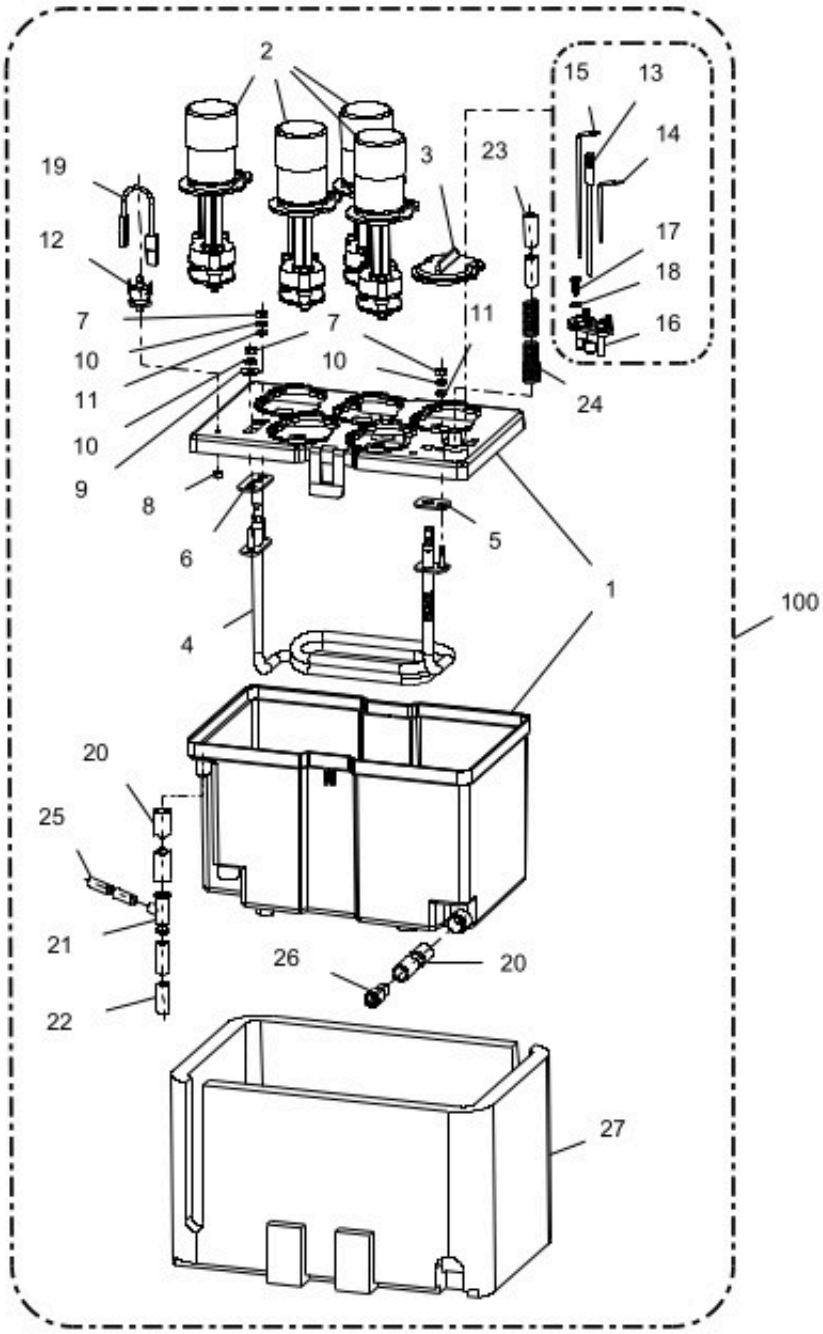

www.rheavendors.com tel: 0039 02 966 551 fax: 0039 02 96 55 086 email: rheavendors@rheavendors.com exclusive property of rheavendors group

INSTANT BOILER		
Pos.	**Code**	**Description**
1	Z0600014111R1	§ TANK+BOILER COVER
2	Z0600016405CL2	§ BOILER PUMP
3	Z0600016422-03	PUMP LID
4/a	TSIL06/11T-10	SILICON HOSE 6X11 MT.10
4/b	TSIL06/11T-50	SILICON HOSE 6X11 MT.50
5	Z0010020063	NOZZLE SPRING D.7/11
6	Z0600014114-01	BOILER STRENGHT GASKET 5P
7	Z0600014113-02	HEATING ELEM GASKET
8	Z0600016138	HEATING ELEMENT 1600 W 230 V
9	ELE0000965	CLIXSON 88°
10	VIT0004816	NUT M4
11	CBLXS00009	THERMOSTAT EXTENSION WIRING
12	VIT0004804	NUT M5
13	VIT0003111	SPRING WASHER 5,3
14	VIT0003505	WASHER 5,5X15X1 A2 UNI 6593
15	VIT0003203	WASHER 5,3X10X1
16	ELE0000978R	SOLUBLES PROBE 80MM
17	Z0600016054	MAXIMUM LEVEL PROBE
18	Z0600016053	MINIMUM LEVEL PROBE
19	Z0600016089-02	PROBE SUPPORT
20	VIT0001005	SCREW HEAD TAP CAP M4X12
21	VIT0003211	WASHER 4,3X9X0,8
22/a	TSIL10/14T-10	SILICON HOSE 10X14 MT.10
22/b	TSIL10/14T-50	SILICON HOSE 10X14 MT.50
23	Z0100003003	T CONNECTOR 462 TS
24/a	TSIL07/11T-10	SILICON HOSE 7X11 MT.10
24/b	TSIL07/11T-50	SILICON HOSE 7X11 MT.50
25/a	TSIL05/08T-10	SILICON HOSE 5X8 MT.10
25/b	TSIL05/08T-50	SILICON HOSE 5X8 MT.50
26	650001057	DRAINER PLUG
27	Z007B170187	ISTANT BOILER INSULATING RHFS1
100/a	Z0600014110CL2	BOILER 4 PUMPS TFI 230V
100/b	Z0600014112CL2	BOILER 5 PUMP

www.rheavendors.com tel: 0039 02 966 551 fax: 0039 02 96 55 086 email: rheavendors@rheavendors.com exclusive property of rheavendors group

ASPIRATION PLAN H

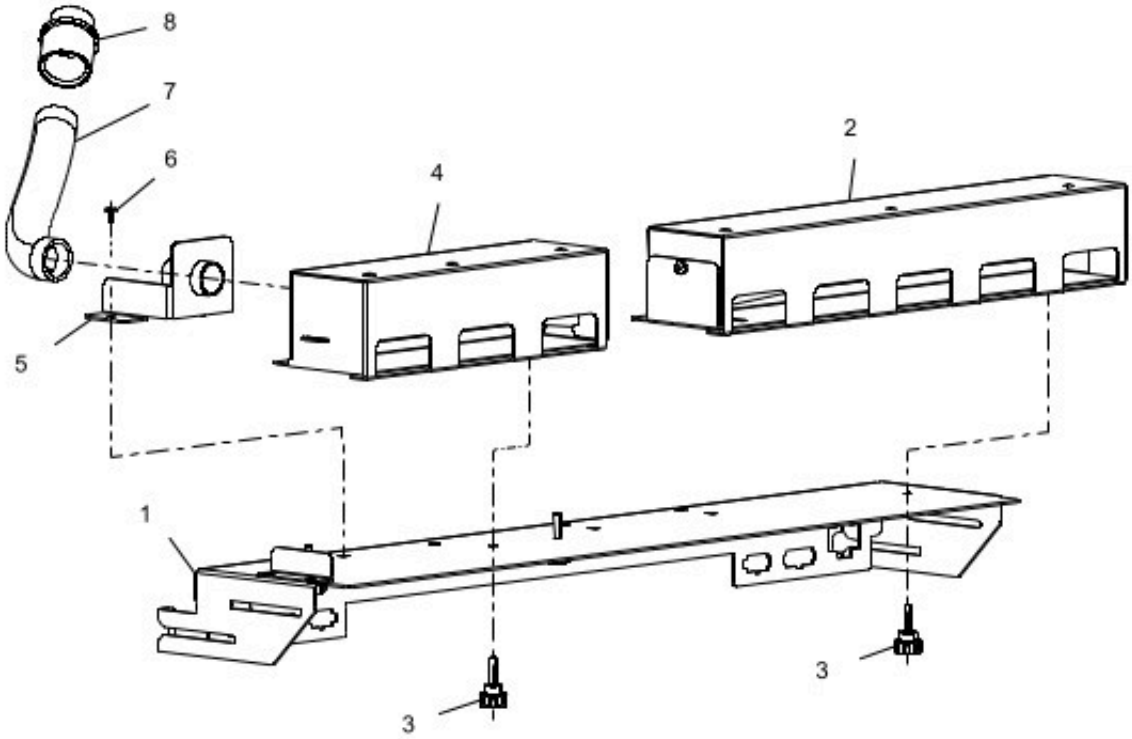

www.rheavendors.com tel: 0039 02 966 551 fax: 0039 02 96 55 086 email: rheavendors@rheavendors.com exclusive property of rheavendors group

ASPIRATION PLAN H		
Pos.	**Code**	**Description**
1	Z007B170123	AIRBOX PLAN I
2	Z007B170225R	§ AIRBOX 5
3	VIT0009180	HANDLE
4	Z007B170231R	§ AIRBOX 3
5	Z007B170141NA	SUPPORT PIPE D.20
6	VIT0002009	SCREW ST HEAD CAP M3.5X6.5
7	TEOL000001CL2	EXTRACTOR TUBE D.20 300MM
8	Z0070020076NA	EXHAUST HOUS REDUCTION (BLACK)

www.rheavendors.com tel: 0039 02 966 551 fax: 0039 02 96 55 086 email: rheavendors@rheavendors.com exclusive property of rheavendors group

ASPIRATION FAN

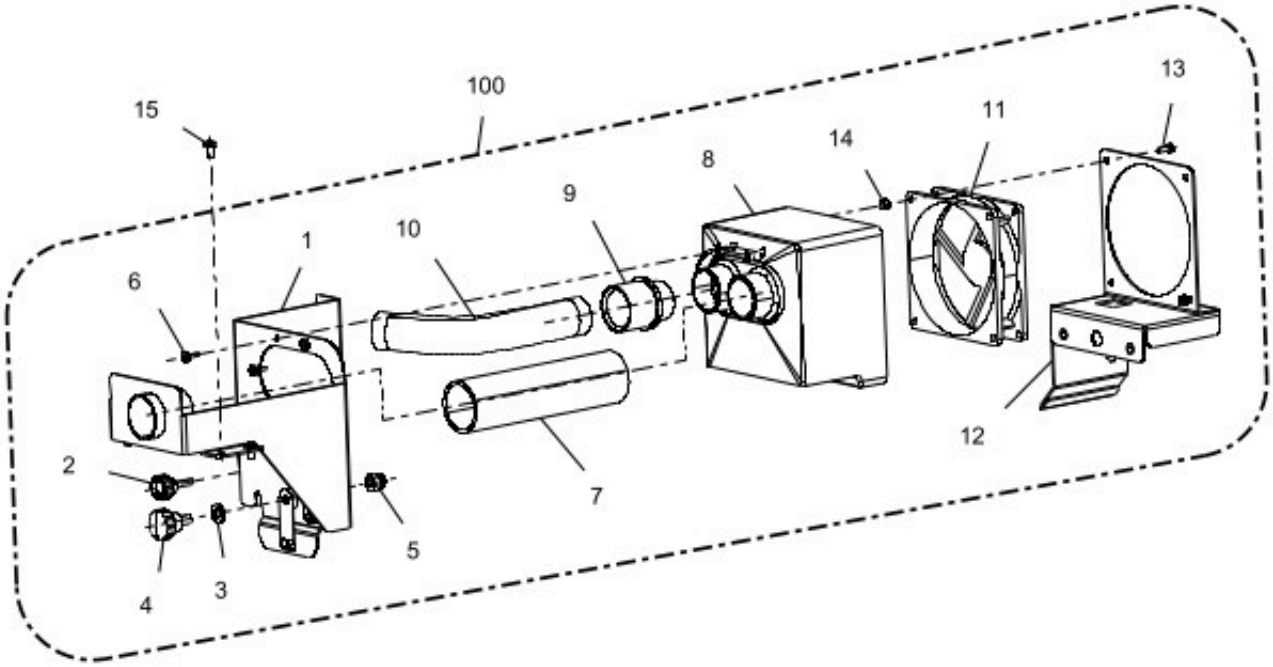

www.rheavendors.com tel: 0039 02 966 551 fax: 0039 02 96 55 086 email: rheavendors@rheavendors.com exclusive property of rheavendors group

ASPIRATION FAN		
Pos.	**Code**	**Description**
1	Z007B170139NAR	§ FAN AND PIPE SUPPORT
2	VIT0009180	HANDLE
3	VIT0003005	WASHER 6,4X12X1,6
4	VIT0009167	HANDLE
5	VIT0004903	BLACK NUT M6 WITH CAPSULE
6	VIT0002469	SCREW HEAD TAP M3.5X10
7	TEOL000002	EXTRACTOR TUBE D.30
8	Z0070020017CY	EXTRACTOR FUNNEL RAL9018
9	Z0070020076NA	EXHAUST HOUS REDUCTION (BLACK)
10	TEOL000001	EXTRACTOR TUBE 20MM
11	ELE0000468R	§ FAN 24V DC-HIGH SPEED-D.92
12	Z007B170137	FAN SUPPORT
13	VIT0000004	SCREW HEAD TAP CAP M3X10
14	VIT0004701	NUT M3
15	VIT0000011	SCREW HEAD TAP CAP M4X8
100	Z007B170139CL2	§ FAN SUPPORT

www.rheavendors.com tel: 0039 02 966 551 fax: 0039 02 96 55 086 email: rheavendors@rheavendors.com exclusive property of rheavendors group

external door

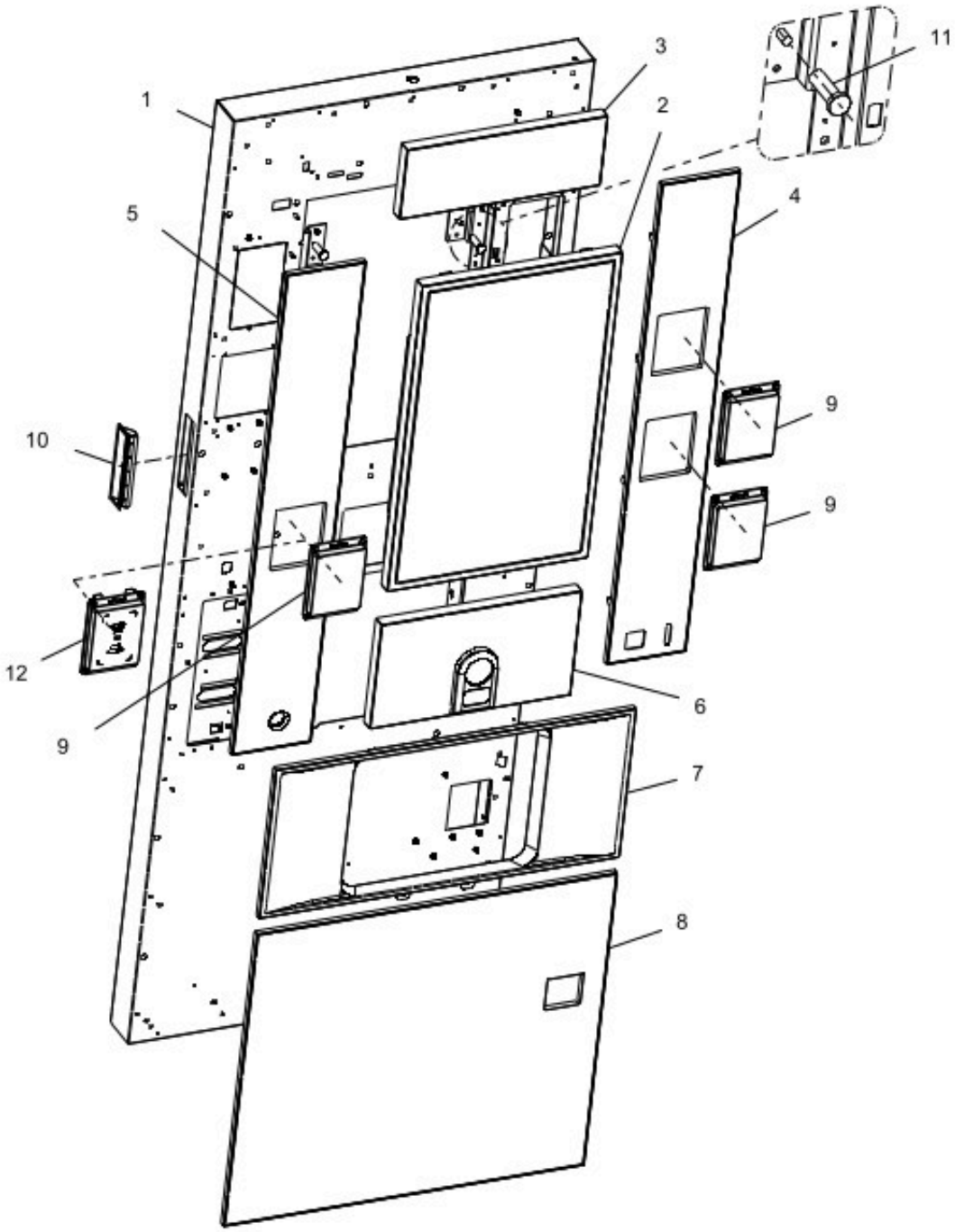

www.rheavendors.com tel: 0039 02 966 551 fax: 0039 02 96 55 086 email: rheavendors@rheavendors.com exclusive property of rheavendors group

external door		
Pos.	**Code**	**Description**
1	Z002B170301NA	DOOR FRAME
2	Z002B170023NACL	§ FRAME HMI 21,5"
3	Z002B170004NA	TOP SCREEN PANEL
4	Z002B170030NA	RIGHT PANEL
5	Z002B170003NA	LEFT PANEL
6		See table LOGO PANEL
7	Z002B170034CQ	SUPP. CUP SCREEN PANEL
8	Z002B170001NA	BOTTOM PANEL
9	Z002B175033NA	PAYMENT SYSTEM PLUG
10	Z0020034823	HANDLE
11	Z002B170040	HMI M6 PIN
12		See table RFID CARD READER

www.rheavendors.com tel: 0039 02 966 551 fax: 0039 02 96 55 086 email: rheavendors@rheavendors.com exclusive property of rheavendors group

internal door

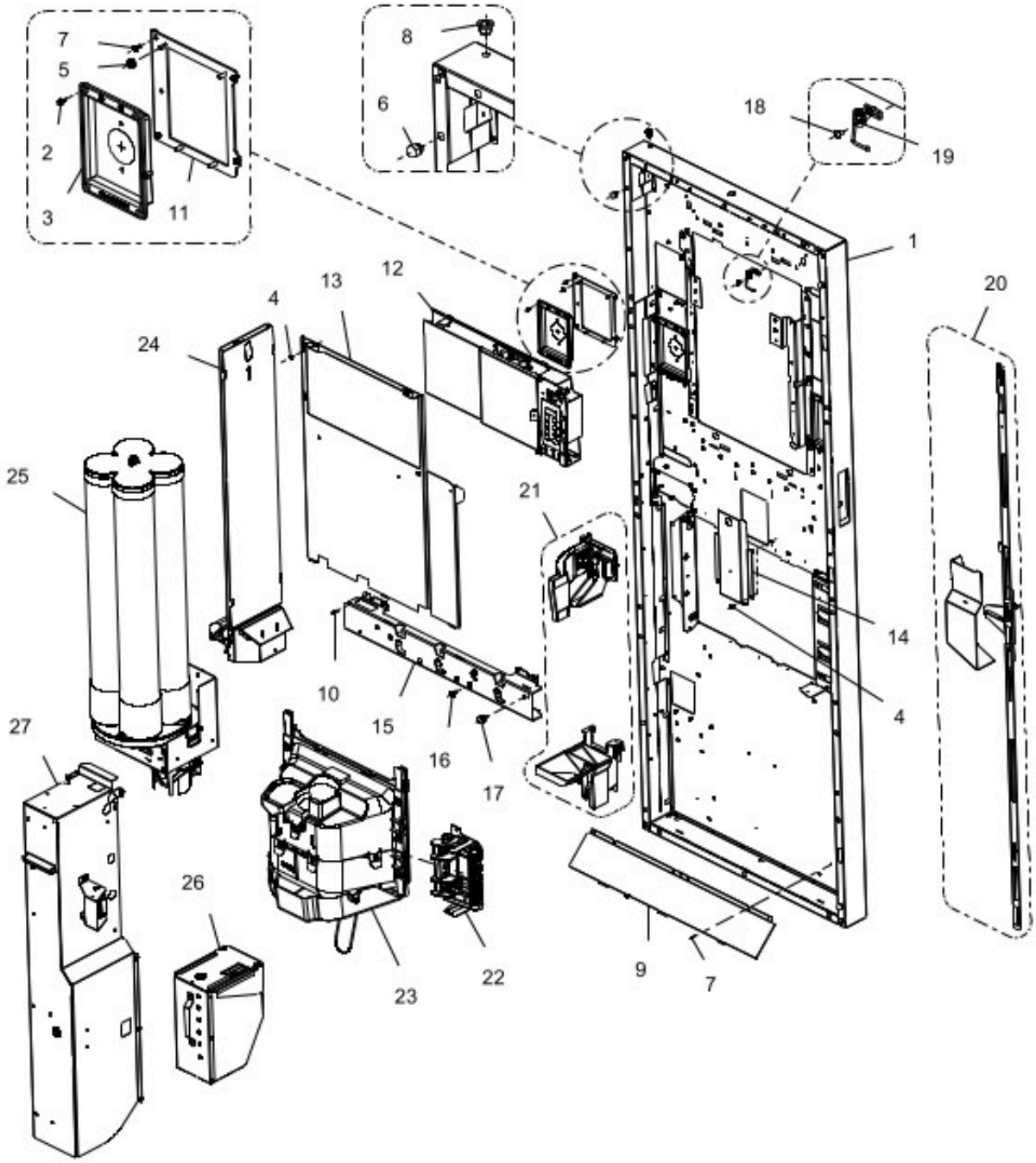

www.rheavendors.com tel: 0039 02 966 551 fax: 0039 02 96 55 086 email: rheavendors@rheavendors.com exclusive property of rheavendors group

internal door		
Pos.	**Code**	**Description**
1	Z002B170301NA	DOOR FRAME
2	VIT0002487	SCREW 3,5X6
3	Z002B175033NA	PAYMENT SYSTEM PLUG
4	VIT0000011	SCREW HEAD TAP CAP M4X8
5	DAM0000056	NUT M4
6	GUA0011030	FOOT PUSH ON BLACK
7	VIT0002009	SCREW ST HEAD CAP M3.5X6.5
8	Z0020034156	DOOR HINGE BUSH
9	Z002B170334NA	LOWER DOOR SLIDE
10	VIT0000012	SCREW HEAD TAP CAP M4X10
11	Z002B170330NA	PAY SUPPORT
12		See table DOOR CONTROL PANEL
13	Z002B170364NA	HMI COVER
14	Z002B170341NA	LOGO COVER
15	Z002B170319	CROSS FRAME DOOR
16	VIT0000236	SCREW HEX HEAD M6X11
17	VIT0009168	KNURLED HANDLE
18	DAM0000061	TAPPING SCEW TC 3,9x9,5 T.
19	H502100043	SAFETY SWITCH SPRING
20		See table DOOR CLOSURE
21		See table INTRODUCTION/RETURN OF COINS
22		See table CUP STATION HANDLE
23		See table 1 turret cups station
24		See table stirrer dispenser
25		See table cups loader (1 turret)
26		See table COIN BOX
27		See table COIN BOX COVER

www.rheavendors.com tel: 0039 02 966 551 fax: 0039 02 96 55 086 email: rheavendors@rheavendors.com exclusive property of rheavendors group

DOOR CLOSURE

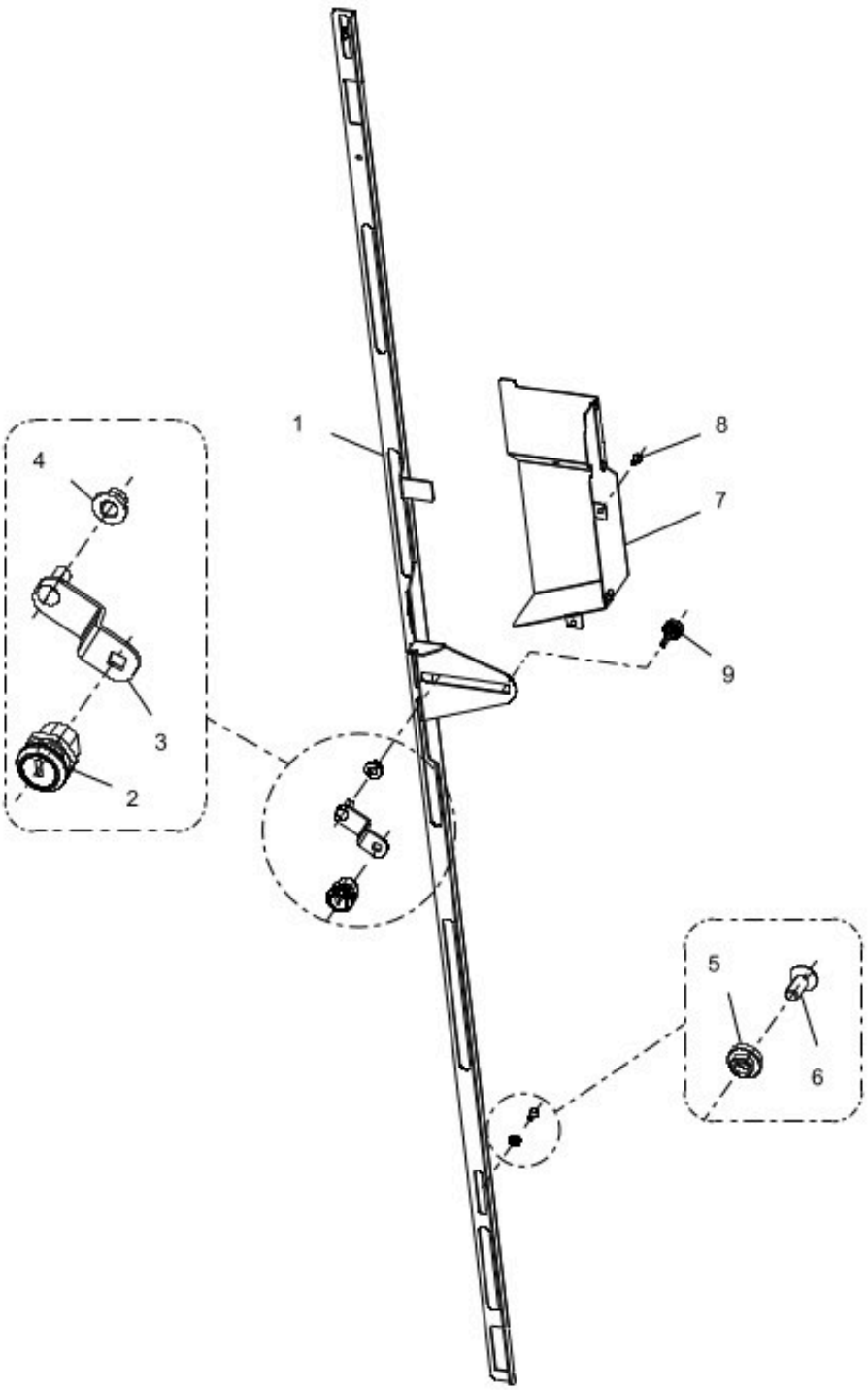

www.rheavendors.com tel: 0039 02 966 551 fax: 0039 02 96 55 086 email: rheavendors@rheavendors.com exclusive property of rheavendors group

DOOR CLOSURE		
Pos.	**Code**	**Description**
1	Z0022400160	LEVER HANDLE DOOR
2/a	SER0000028	LOCK MM20 + KEY 3480
2/b	SER0000023	LOCK RIELDA
3	Z002B170130	DOOR LOCK PLATE
4	Z002A003017	LOCK ROD BUSHING
5	H66100008	SPACER
6	VIT0000107	SCREW COUNT FLAT HEAD M4X10
7	Z002B170332	DOOR LOCK COVER
8	VIT0000011	SCREW HEAD TAP CAP M4X8
9	VIT0009180	HANDLE

www.rheavendors.com tel: 0039 02 966 551 fax: 0039 02 96 55 086 email: rheavendors@rheavendors.com exclusive property of rheavendors group

RFID CARD READER

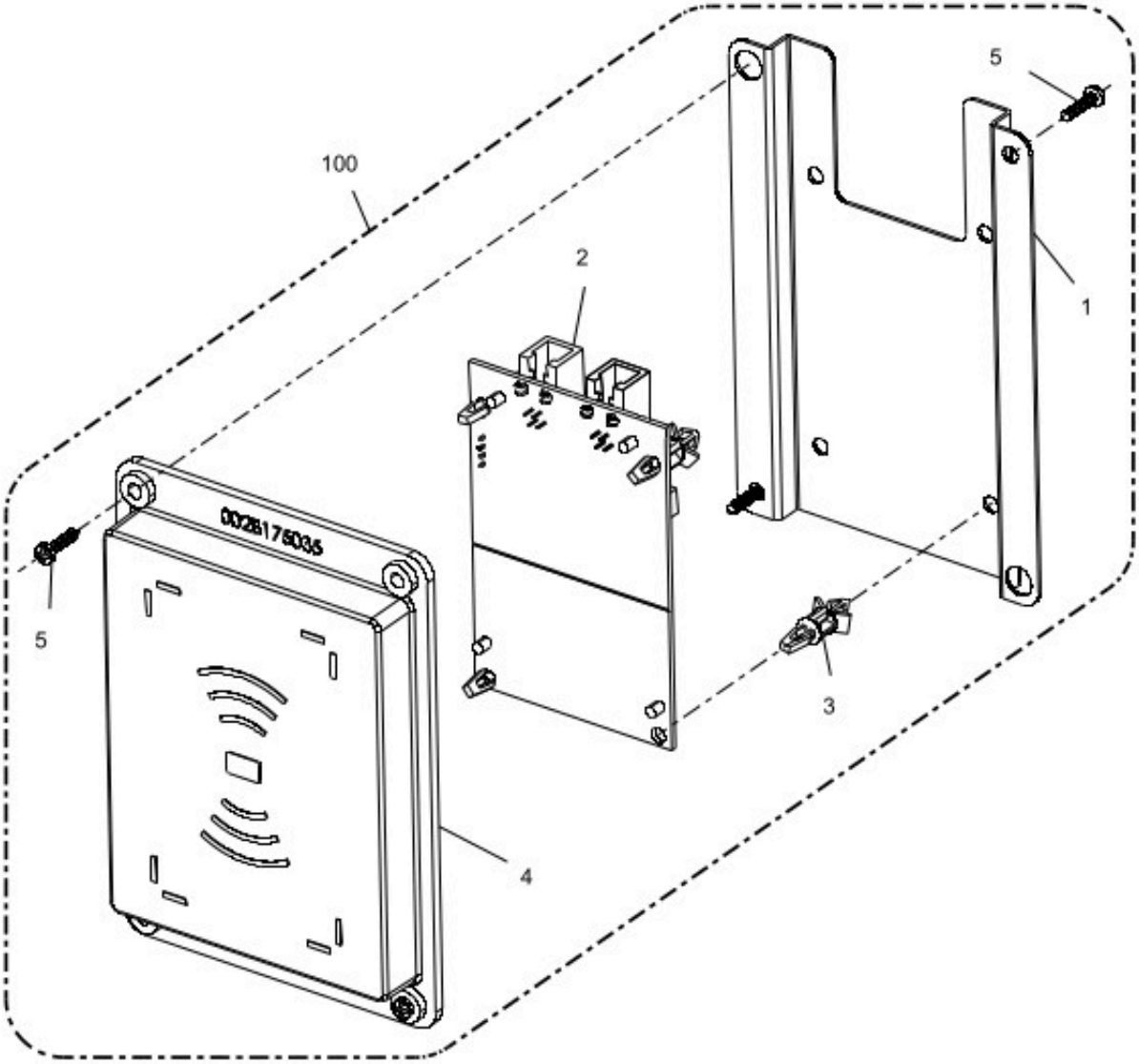

www.rheavendors.com tel: 0039 02 966 551 fax: 0039 02 96 55 086 email: rheavendors@rheavendors.com exclusive property of rheavendors group

RFID CARD READER		
Pos.	**Code**	**Description**
1	Z002B170346	RFID SUPPORT
2	SCH0006261	RFID CARD READER_1
3	ELE0062003	BOARD SUPPORT
4	Z002B175035NA	PAYMENT SYSTEMS PLUG RFID
5	VIT0002014	SCREW ST HEAD CAP M2.9X13
100	Z002B170346R	§ RFID

www.rheavendors.com tel: 0039 02 966 551 fax: 0039 02 96 55 086 email: rheavendors@rheavendors.com exclusive property of rheavendors group

DOOR CONTROL PANEL

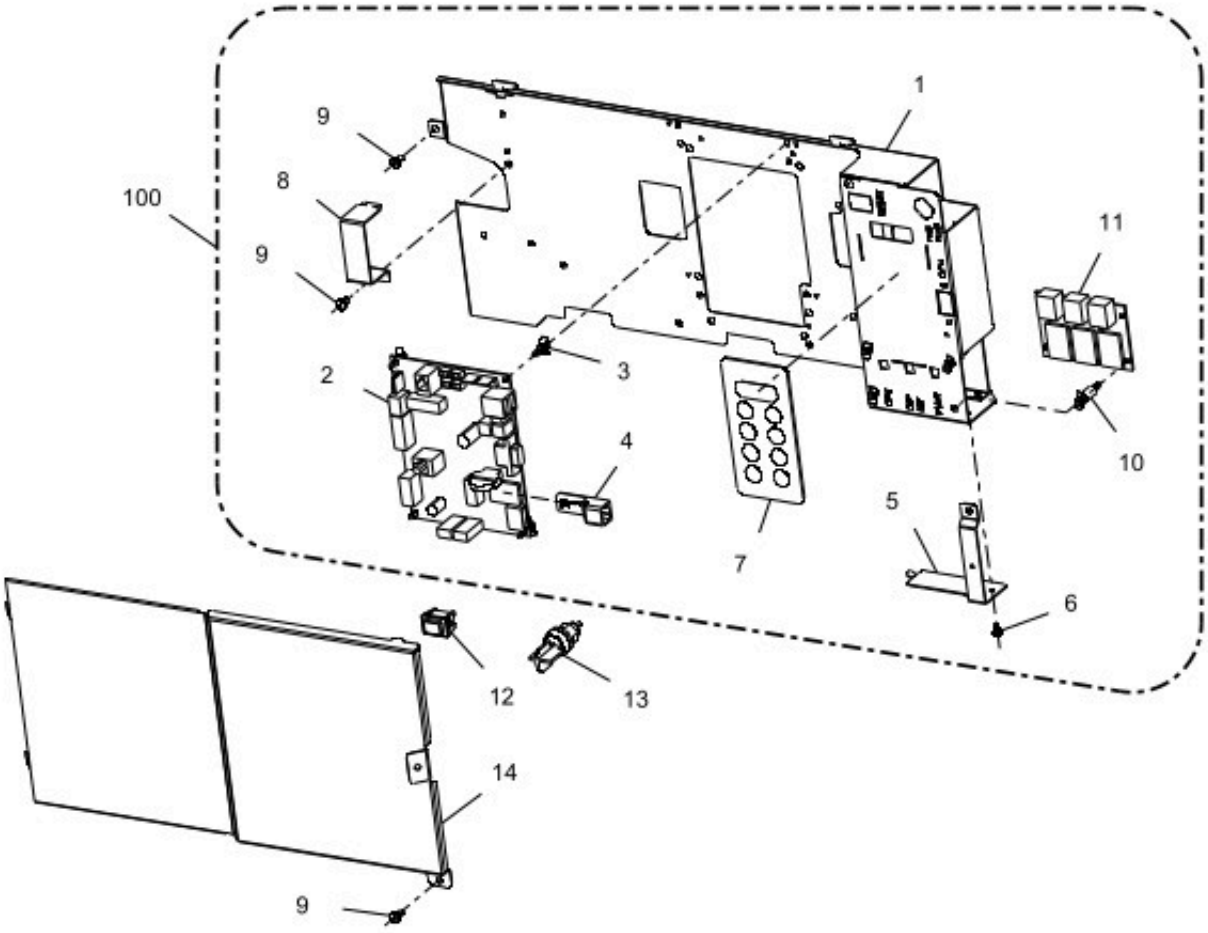

www.rheavendors.com tel: 0039 02 966 551 fax: 0039 02 96 55 086 email: rheavendors@rheavendors.com exclusive property of rheavendors group

DOOR CONTROL PANEL		
Pos.	**Code**	**Description**
1	Z0022300078NA	FS1 DOOR BOARD PANEL
2	SCH0007904	CPU BOARD (2017)
3	ELE0062036	SPACER SCH. H5 LCBS-3-01
4	SCHA158002	CONNECTION BOARD RHEAFLASH OUT
5	Z002B170363NA	FLASH CARD COVER
6	VIT0002009	SCREW ST HEAD CAP M3.5X6.5
7	ELTB170001	PROGRAM. KEYPAD
8	Z002B170353	CLAM
9	VIT0000011	SCREW HEAD TAP CAP M4X8
10	ELE0062039	SPACER SR2706 LCBS-10-01
11	SCHA158001	CONNECTION BOARD RHEAFLASH IN
12	ELE0002258	PUSH BUTTON RED
13	KITXS00131	FREE VEND KEY KIT
14	Z002B170312NA	BOARD COVER PANEL
100	Z014B170001CL3	§ DOOR ELECTRIC PANEL

www.rheavendors.com tel: 0039 02 966 551 fax: 0039 02 96 55 086 email: rheavendors@rheavendors.com exclusive property of rheavendors group

LOGO PANEL

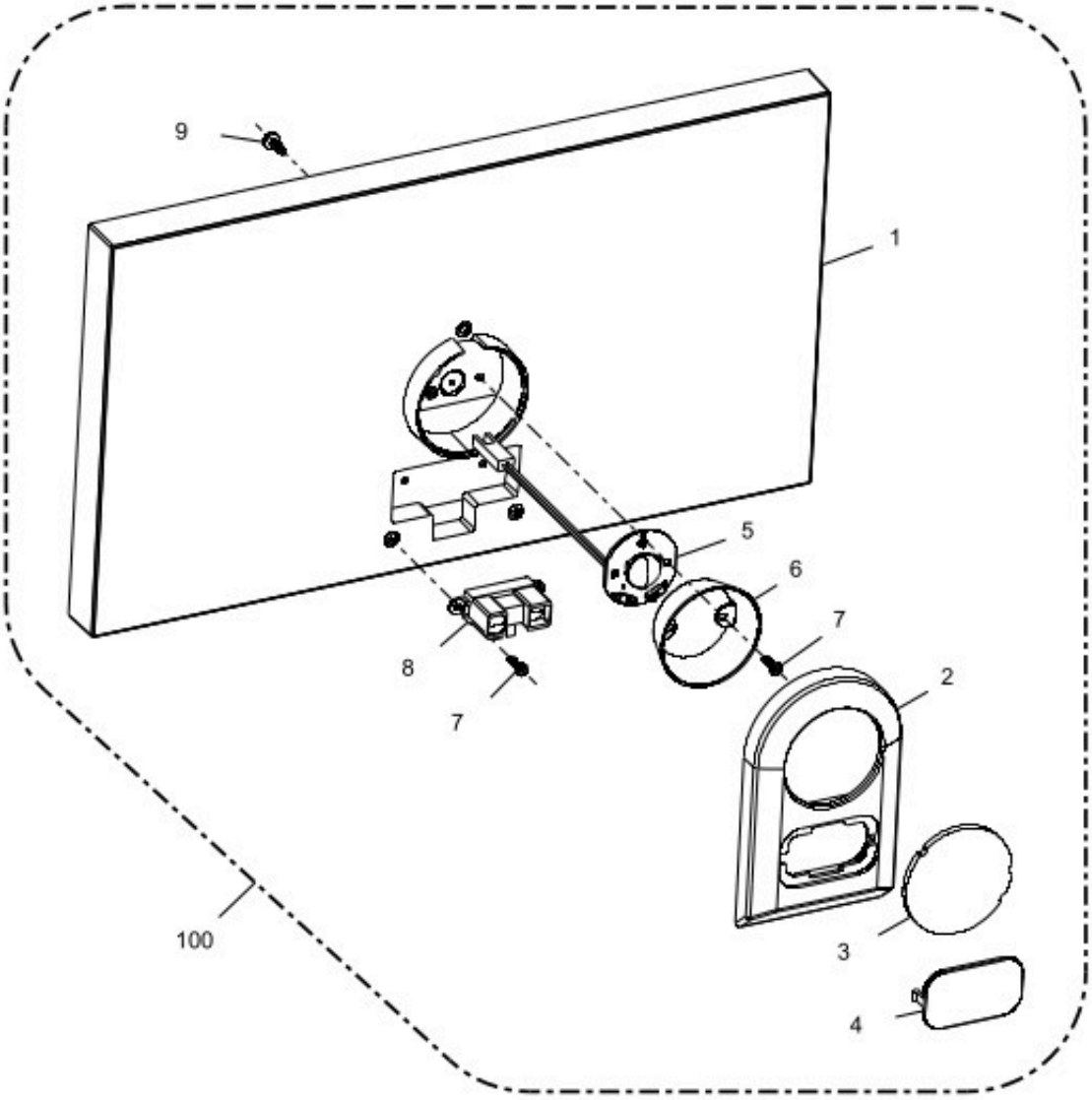

www.rheavendors.com tel: 0039 02 966 551 fax: 0039 02 96 55 086 email: rheavendors@rheavendors.com exclusive property of rheavendors group

LOGO PANEL		
Pos.	**Code**	**Description**
1	Z002B170038NA	BOTTOM SCREEN PANEL
2	Z002A158224NA	RHEA LOGO BEZEL
3	103A158001	LOGO "laRhea"
4	Z0020042251NE	SMOKED PLEXIGLASS SENSOR
5	Z002A158227	LOGO BACKLIGHTING BOARD
6	Z002B170135CZ	BENDS LITE RAL7011
7	VIT0002485	SCREW ST HEAD CAP 3X10
8	ELT0006817	PERSON PRESENCE SENSOR
9	VIT0002469	SCREW HEAD TAP M3.5X10
100	Z002B170038NACL10	§ LOGO PANEL

www.rheavendors.com tel: 0039 02 966 551 fax: 0039 02 96 55 086 email: rheavendors@rheavendors.com exclusive property of rheavendors group

1 turret cups station

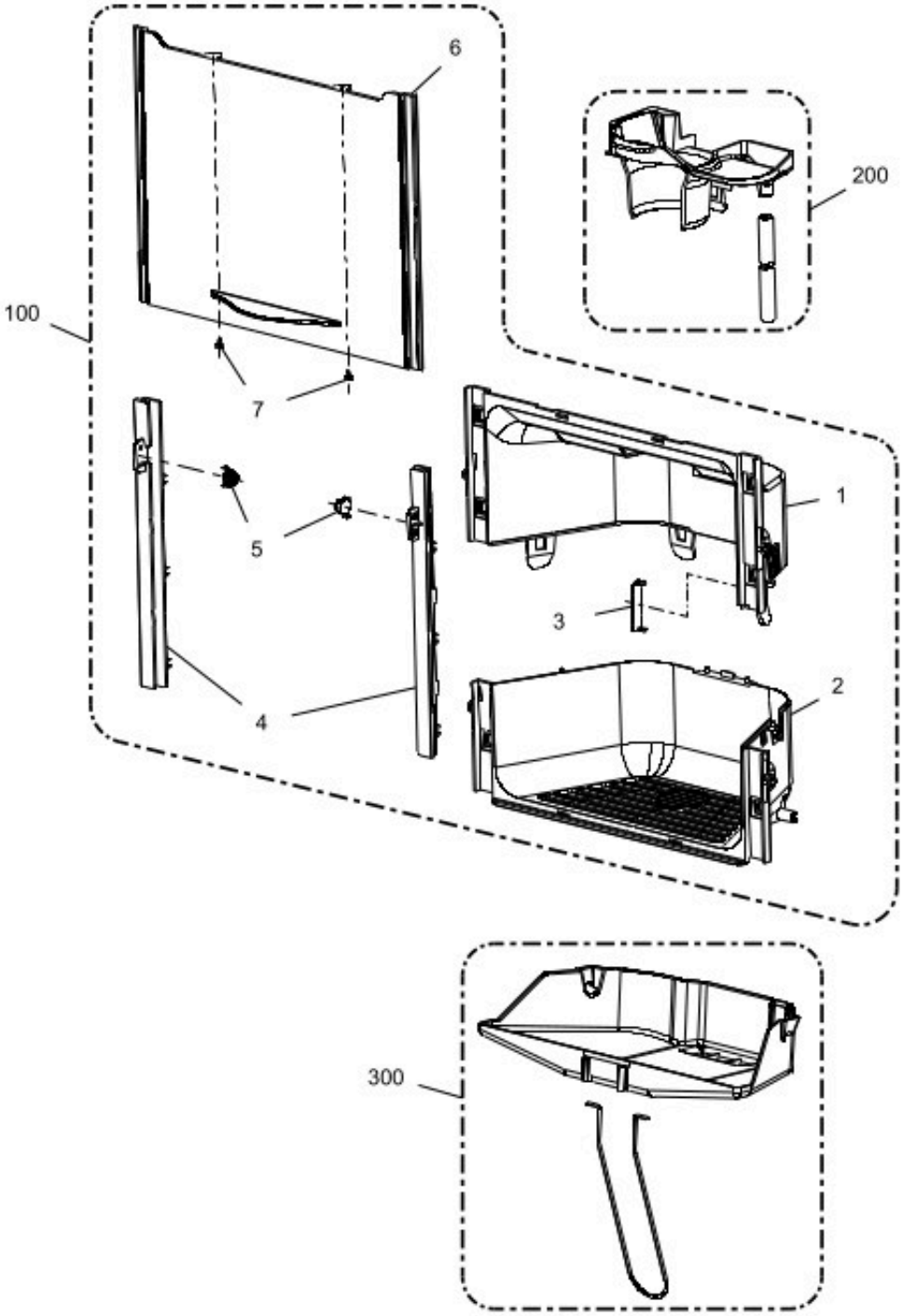

www.rheavendors.com tel: 0039 02 966 551 fax: 0039 02 96 55 086 email: rheavendors@rheavendors.com exclusive property of rheavendors group

1 turret cups station		
Pos.	**Code**	**Description**
1	Z040B170002NA	CUP STATION UPPER FRAME
2	Z040B170003NA	CUP STATION LOWER FRAME
3	Z0020042251	TRANSPARENT PLEXIGLASS SENSOR
4	Z0400009851CWR	§ DOOR GUIDE LH+RH RAL 7043
5	Z0400009096	FLAP RETARDER
6	Z040B170006TR	GLASS DOOR
7	GUA0011017	MACHINE FOOT D.7,9
100	Z040B170001NACL	§ CUP STATION
200	Z040B170005NACL	§ CUP SUPPORT 1T
300	Z040B170004NACL	§ DRIP TRY

www.rheavendors.com tel: 0039 02 966 551 fax: 0039 02 96 55 086 email: rheavendors@rheavendors.com exclusive property of rheavendors group

cups loader (1 turret)

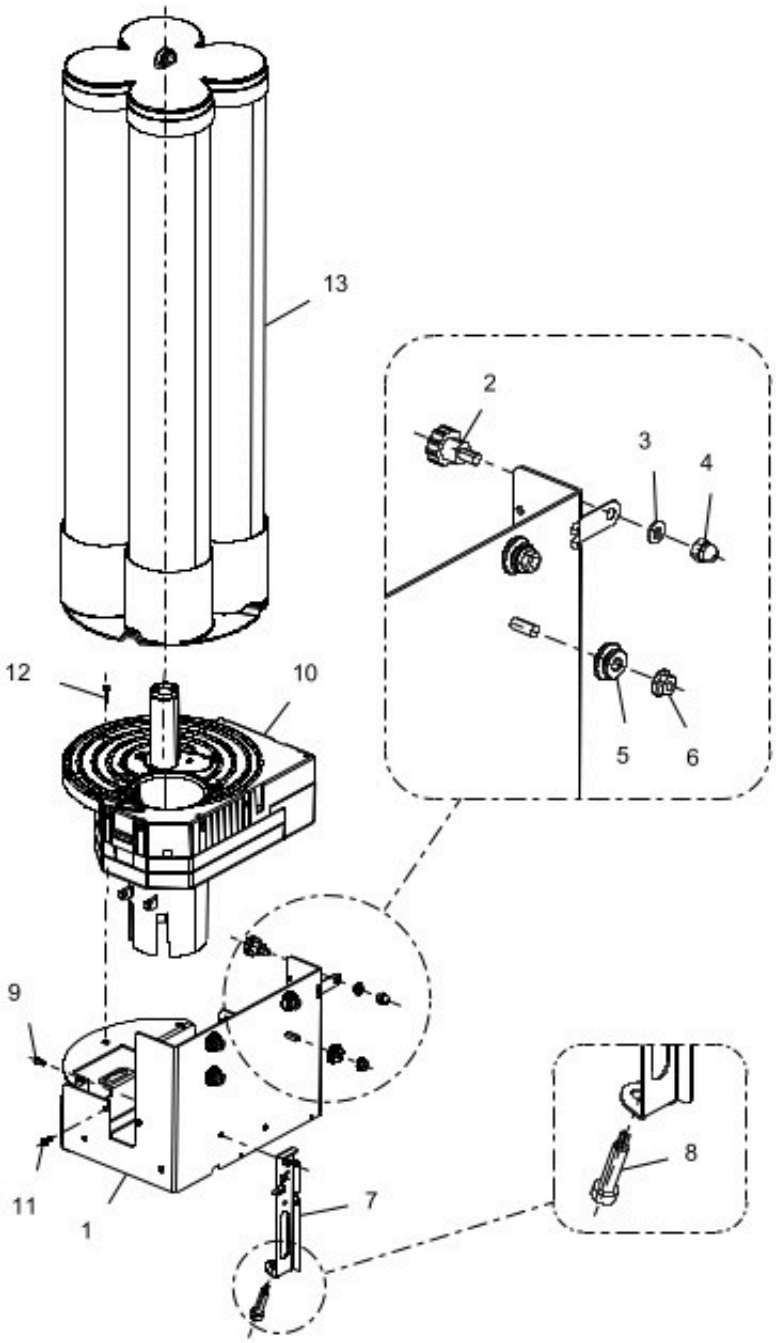

www.rheavendors.com tel: 0039 02 966 551 fax: 0039 02 96 55 086 email: rheavendors@rheavendors.com exclusive property of rheavendors group

cups loader (1 turret)		
Pos.	**Code**	**Description**
1	Z002B170349NA	DB SUPPORT 1T ø 70
2	VIT0009167	HANDLE
3	VIT0003005	WASHER 6,4X12X1,6
4	VIT0004903	BLACK NUT M6 WITH CAPSULE
5	Z002A158308	DB SUPPORT PIN
6	VIT0004830	NUT M6
7	Z002B170351	SPOT SUPPORT
8	ELT0006781	CUPS STATION LED 24V
9	VIT0000011	SCREW HEAD TAP CAP M4X8
10		See table CUP DISPENSER 1 TURET
11	VIT0002469	SCREW HEAD TAP M3.5X10
12	VIT0000014	SCREW HEAD TAP CAP M4X16
13		See table cups turret

www.rheavendors.com tel: 0039 02 966 551 fax: 0039 02 96 55 086 email: rheavendors@rheavendors.com exclusive property of rheavendors group

CUP DISPENSER 1 TURET

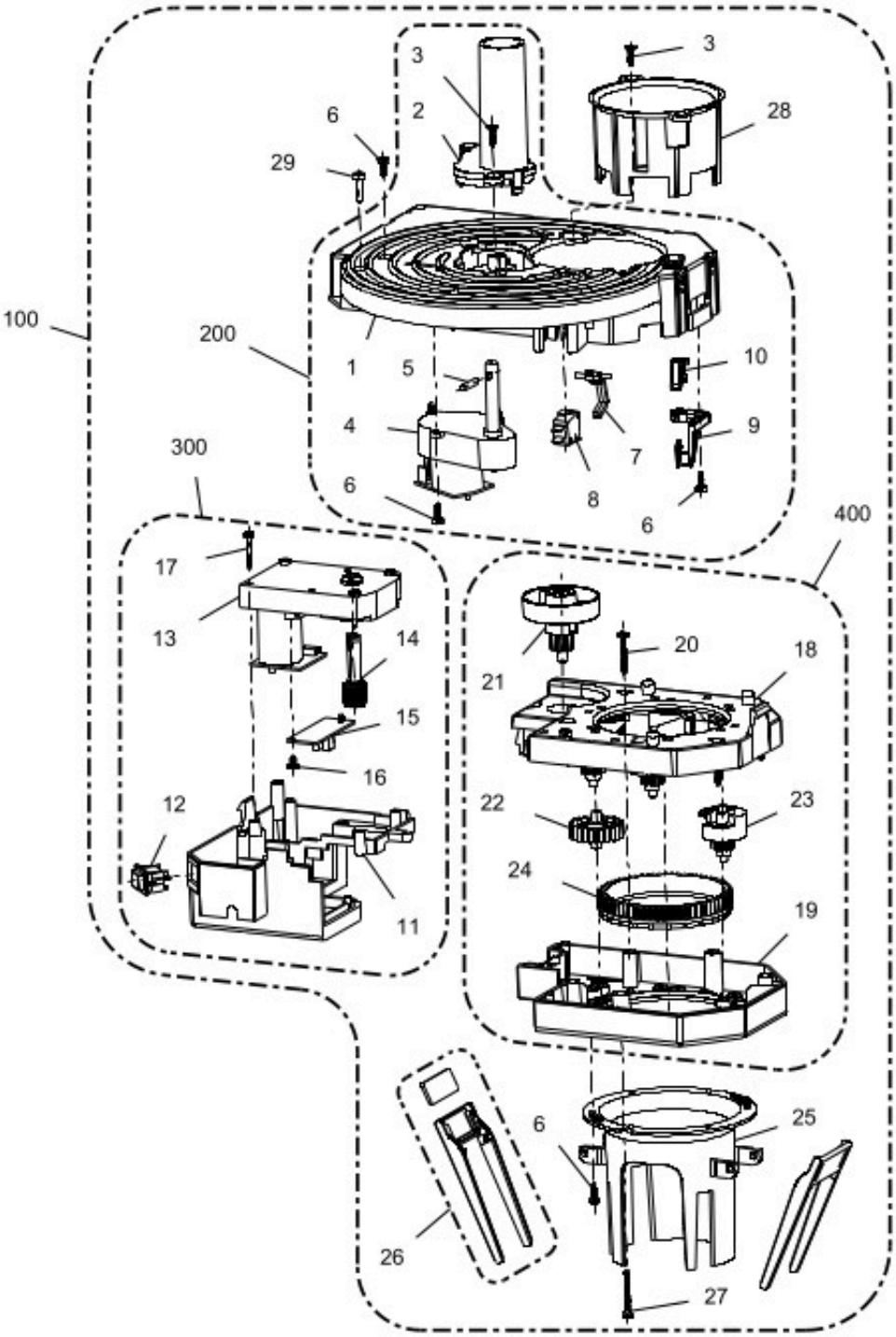

www.rheavendors.com tel: 0039 02 966 551 fax: 0039 02 96 55 086 email: rheavendors@rheavendors.com exclusive property of rheavendors group

CUP DISPENSER 1 TURET		
Pos.	**Code**	**Description**
1	Z0190006581CI	TURRET SUPPORT RAL 7042
2/a	Z0190006537CY	TURRET CUP CONNEC. 4C. RAL9018
2/b	Z0190006547CF	TURRET CUP CONNEC. 5C. RAL7016
3	VIT0002101	SCREW COUNT FLAT HEAD M3.5X13
4	Z0090002043R	§ MOTOR GEAR+BOARD
5	VIT0005223	PIN 4X18 DIN 1475
6	VIT0002469	SCREW HEAD TAP M3.5X10
7	Z0190006543-01	MICROSWITCH LEVER WHITE
8	ELE0001530	MICROSWITCH 3A 125-250VA
9	Z019A111002CI	MICRO SUPPORT
10	Z019A111001CI	MICRO SWITCH ACT. 0° DEGREES
11	Z0190006522CY	MOTOR SUPPORT RAL9018
12	ELE0002258	PUSH BUTTON RED
13	Z0090002114R2	§ GEARBOX MOTOR 11RPM 24V DC
14	Z0190006518	TOOTHED SHAFT Z18 WHITE
15	SCH0007000	SPLIT UP SENSOR
16	VIT0002002	SCREW ST HEAD CAP M3.5X6.5
17	VIT0002025	SCREW ST HEAD CAP M3.5X22
18	Z0190006524CY	UPPER CUP DROP MECH. RAL9018
19	Z0190006521CY	LOWER CUP DROP MECH. RAL9018
20	VIT0002456	SCREW HEAD TAP M3.5X25
21	Z0190006511NA	CUPS TURRET SPINDLE BLACK
22	Z0190006528	Z26 WHEEL WHITE
23/a	Z0190006551GJ	SPLIT UP D.70/78-YELLOW PP
23/b	Z0190006506IC	SPLIT UP D.70/78-ORANGE PL
23/c	Z0190006502	CUP SPLITTER D.73/80 PP WHITE
23d	Z0190006509PL	SPLIT UP D.80 MULTISTEP BLU
24/a	Z0190006523	TOOTHED RING NUT D.70/73
24/b	Z0190006507	TOOTHED RING NUT D.78/80 WHITE
25	Z002A158432NA	CUPS CHUTE D.70
26	Z0400009027NAR	CUP SLOW MOTION R9005+1 WEIGHT
27	VIT0002468	SCREW HEAD TAP M3.5X30
28	Z0190006538CF	CUPS REDUCER D.70 RAL7016
29	VIT0000014	SCREW HEAD TAP CAP M4X16
100/a	Z0190006500CL28R	§ CUP DISP. 4C D.70PAPER PD DS
100/b	Z0190006500CL29R	§ CUP DISP. 4C D.70PLAST PD DS
100/c	Z0190006501CL14R	§ CUP DISP. 5C D.70PAPER PD DS
100/d	Z0190006501CL15R	§ CUP DISP. 5C D.70PLAST PD DS
100/e	Z0190006500CL24	§ CUP DISP.4C D.80 PAPER PD DS
100/f	Z0190006500CL20	§ CUP DISP.4C D.80C PD DS BLUE
200/a	Z0190006534CL13R	§TURRET SUPP. 4C D.70/73 PD DS
200/b	Z0190006534CL15R	§TURRET SUPPORT 5C
200/c	Z0190006534CL14R	§ TURRET SUPP. 4C D.80 PD DS
300	Z0190006522CL1R	§ GEARS DB TURRET SUPPORT
400/a	Z0190006521CL21R	§ CUP DROP MECH. D.70-C
400/b	Z0190006521CL9R	§ CUP DROP MECH. D.70-P
400/c	Z0190006521CL5R	§ CUP DROP MECH. D.80-PP

www.rheavendors.com tel: 0039 02 966 551 fax: 0039 02 96 55 086 email: rheavendors@rheavendors.com exclusive property of rheavendors group

CUP DISPENSER 1 TURET		
400/d	Z0190006521CL12R	§ CUP DROP MECH. D.80-PP BLUE
400/e	Z0190006521CL18R	§ CUP DROP MECH.D.73-C

www.rheavendors.com tel: 0039 02 966 551 fax: 0039 02 96 55 086 email: rheavendors@rheavendors.com exclusive property of rheavendors group

cups turret

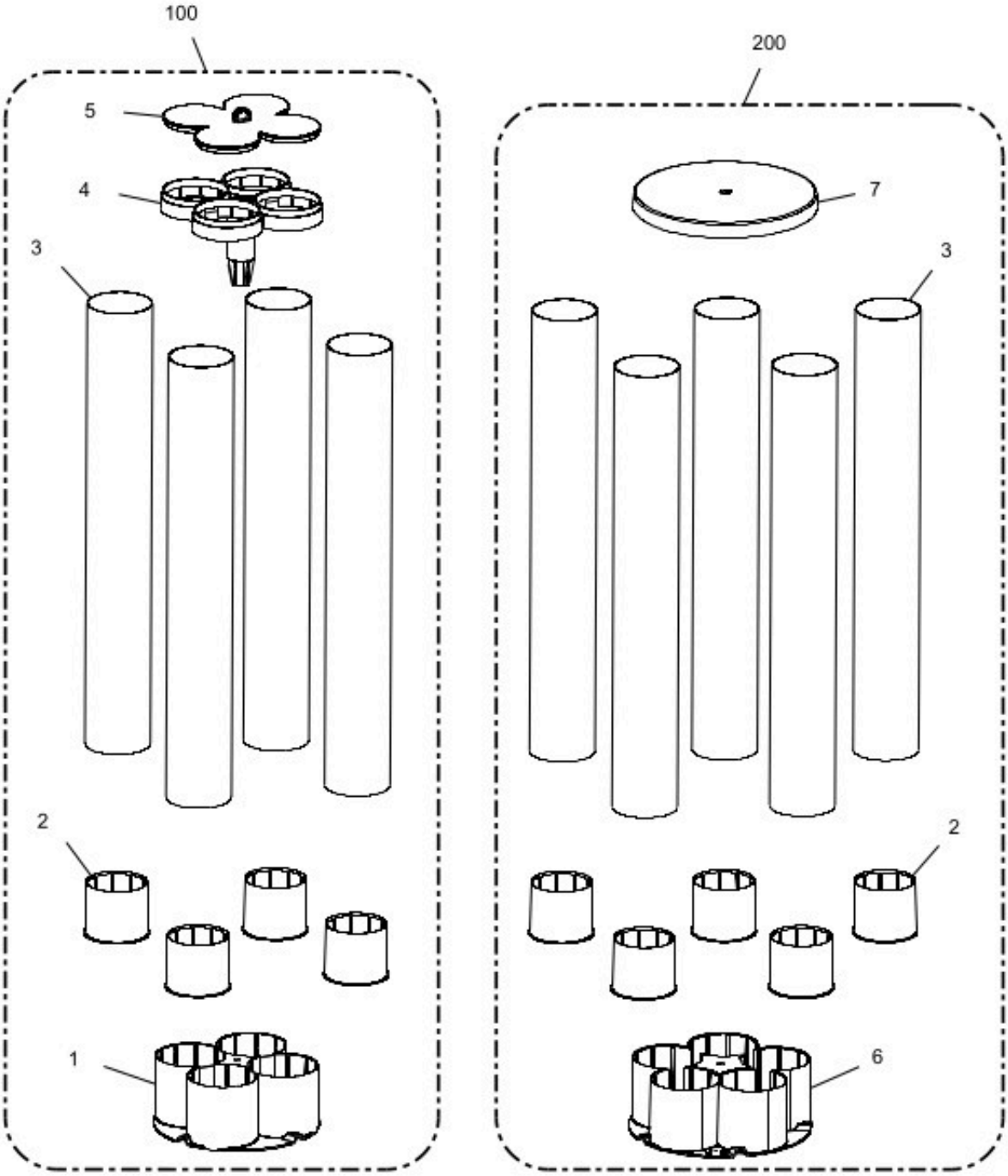

www.rheavendors.com tel: 0039 02 966 551 fax: 0039 02 96 55 086 email: rheavendors@rheavendors.com exclusive property of rheavendors group

cups turret		
Pos.	**Code**	**Description**
1/a	Z018A111013CY	CUP TURRET SPINDLE 4C D70 9018
1/b	Z018A111012CY	CUP TURRET SPINDLE 4C D80 9018
2	Z0180013113	D.70 COLUMN REDUCTION (WHITE)
3/a	Z0180013106	CUP HOLDER 2T D.84/81MM L600MM
3/b	Z0180013127	CUP HOLDER 2T D.87/84MM L550MM
4/a	Z0180013105-02CY	CUP TURRET SPINDLE 4C RAL9018
4/b	Z0180013122CY-04	CUP TURRET SPINDLE 4C RAL9018
5	Z0180013313CY	TURRET COVER 4C
6	Z018A111011CY	CUP TURRET SPINDLE 5C D70 9018
7	Z0180013309CY	5 TURRETS LID (RAL9018)
100/a	Z0180013100CL14R	§ CUPS TURRET 4COL D70/73 PDDS
100/b	Z0180013100CL13R	§ TURRET 4C D.80 PD DS
200	Z0180013101CL9R	§ CUPS TURRET 5COLUMNS D.70/73

www.rheavendors.com tel: 0039 02 966 551 fax: 0039 02 96 55 086 email: rheavendors@rheavendors.com exclusive property of rheavendors group

stirrer dispenser

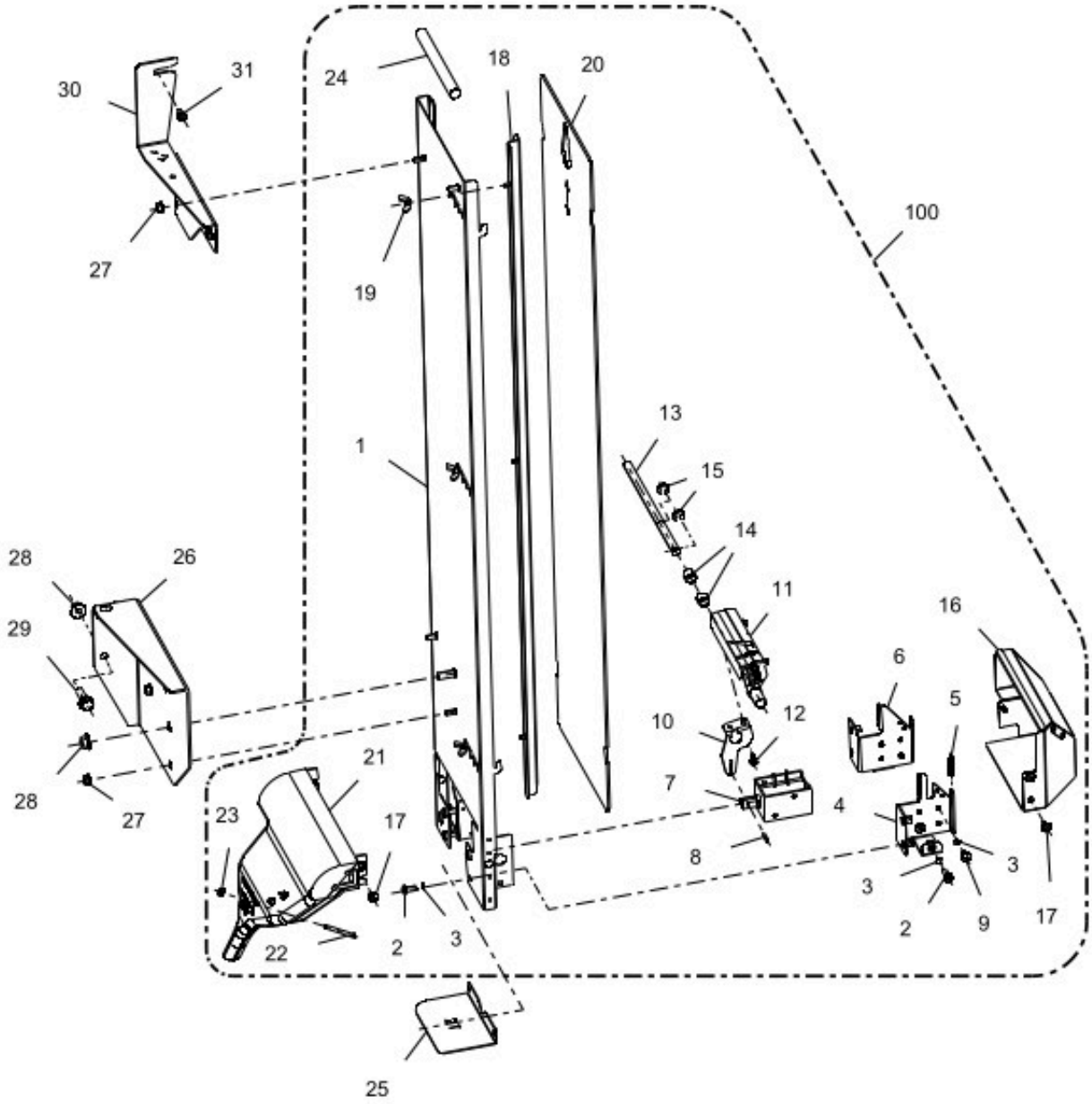

www.rheavendors.com tel: 0039 02 966 551 fax: 0039 02 96 55 086 email: rheavendors@rheavendors.com exclusive property of rheavendors group

stirrer dispenser		
Pos.	**Code**	**Description**
1	Z045B170301	STIRRER DISPENSER SUPPORT
2	VIT0000012	SCREW HEAD TAP CAP M4X10
3	VIT0003405	SPRING WASHER 4,3
4	Z045A158123	E.M. LEFT SUPPORT
5	Z0450003010	SPRING
6	Z045A158122	E.M. RIGHT SUPPORT
7	ELE0000055	ELECTROMAGNET 5% 24V DC
8	VIT0005211	DOWEL PIN 2.5X12
9	VIT0000021	SCREW HEAD TAP CAP M4X6
10	Z045A158119	BRACKET
11	Z045A158137	STIRRER EJECTOR
12	VIT0002475	SCREW HEAD TAP M3.5X8
13	Z045A158118	PIN
14	Z0450003031	SPACER
15	VIT0006504	RING 5
16	Z045A158163	STIRRER EM COVER
17	VIT0002401	SCREW ST HEAD CAP M3.5X9.5
18	Z045A158127	1T STIRRER REGULATOR
19	VIT0007019	NUT WINGS M4
20	Z045A158116	1T STIRRER COVER
21/a	Z045B170025NA	STIRRER CHUTE FS1 104
21/b	Z045B170026NA	STIRRER CHUTE FS1 89
22	VIT0002401	SCREW ST HEAD CAP M3.5X9.5
23	VIT0004701	NUT M3
24/a	4001012030	STIRRER WEIGHT 89MM
24/b	Z0450003033	STIRRER WEIGHT 104MM
25/a	Z045B170307	CHUTE BLOCK 2T STIRRER
25/b	Z045A158176	CHUTE BLOCK 2T STIRRER
26/a	Z045B170344	LOWER STIRRER SUPPORT 1T
26/b	Z045B170371	LOWER SUPPORT STIRRER 1T 70C
27	DAM0000056	NUT M4
28	VIT0004830	NUT M6
29	VIT0000236	SCREW HEX HEAD M6X11
30/a	Z045B170346	STIRRER SUPPORT 1T
30/b	Z045B170348	STIRRER SUPPORT 1T
31	VIT0000011	SCREW HEAD TAP CAP M4X8
100/a	Z045B170100R1	§ STIRRERS DISPENSER 1T 104
100/b	Z045B170100R2	§ STIRRERS DISP. 1T 4C/5C 89

www.rheavendors.com tel: 0039 02 966 551 fax: 0039 02 96 55 086 email: rheavendors@rheavendors.com exclusive property of rheavendors group

INTRODUCTION/RETURN OF COINS

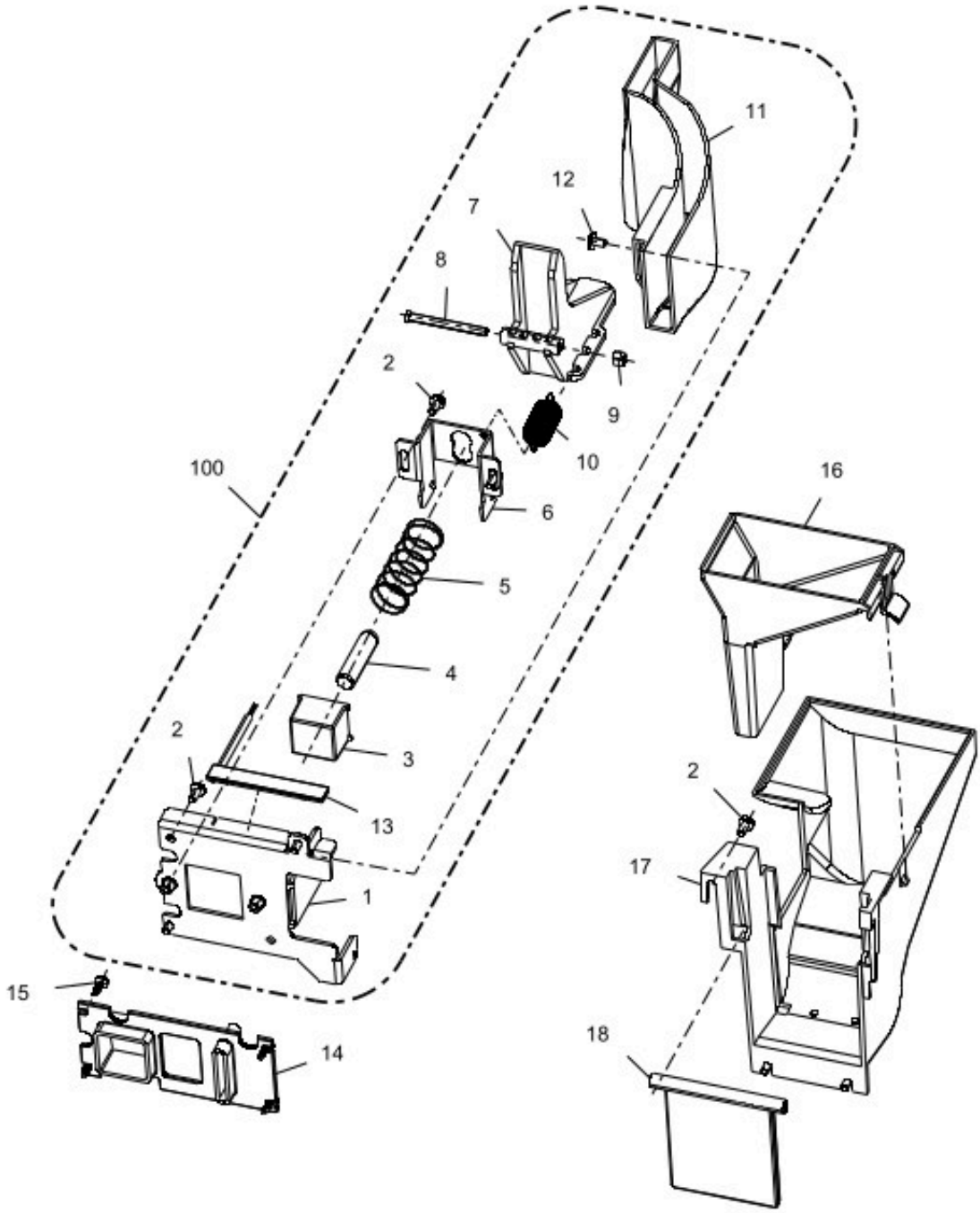

www.rheavendors.com tel: 0039 02 966 551 fax: 0039 02 96 55 086 email: rheavendors@rheavendors.com exclusive property of rheavendors group

INTRODUCTION/RETURN OF COINS		
Pos.	**Code**	**Description**
1	Z002B170324	SLIDE COIN SUPPORT
2	VIT0000011	SCREW HEAD TAP CAP M4X8
3	Z002A158398NA	COIN RETURN BUTTON
4	Z002A158399	COIN RETURN BOTTON PIN
5	4050010074	COIN RETURN BUTTON SPRING
6	Z002A158476	COIN RETURN SUPPORT
7	H502120033	CHANGE RETURN LEVER SQUARE
8	VIT0000125	SCREW COUNT FLAT HEAD M4X45
9	VIT0004815	NUT M4
10	H00016006	SPRING FOR COIN RETURN LEVER
11	H502120031	COIN ENTRY CHANNEL
12	VIT0000030	SCREW HEAD TAP CAP M4X7
13	Z0020055172	LED LIGHTING SYSTEM INCOME COI
14	Z002A158166TRL	COIN LIGHT GUIDE
15	VIT0002469	SCREW HEAD TAP M3.5X10
16	Z002B170152	CHUTE COIN
17	Z002B170139NA	COINS RETURN CHUTE
18	Z0020038144NA	COINS RETURN FLAP RAL9005
100/a	Z002B170048R1	§ INSERT COINS PLATE
100/b	Z002B170048R2	§ INSERT COINS PLATE

www.rheavendors.com tel: 0039 02 966 551 fax: 0039 02 96 55 086 email: rheavendors@rheavendors.com exclusive property of rheavendors group

CUP STATION HANDLE

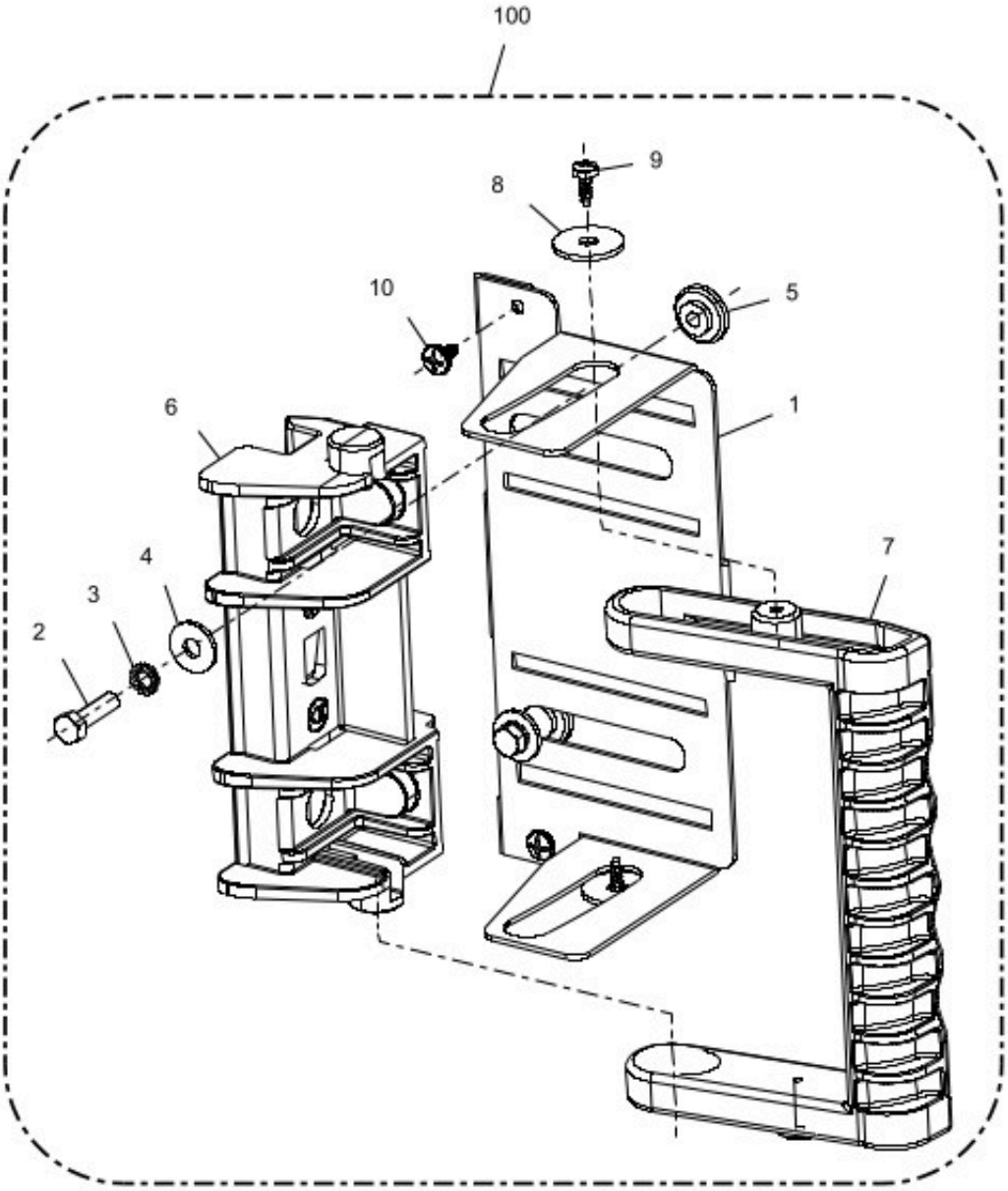

www.rheavendors.com tel: 0039 02 966 551 fax: 0039 02 96 55 086 email: rheavendors@rheavendors.com exclusive property of rheavendors group

CUP STATION HANDLE		
Pos.	**Code**	**Description**
1	Z0400009121	HANDLE SUPPORT
2	VIT0001110	SCREW HEX HEAD M5X20
3	VIT0003104	SPRING WASHER 5,3
4	VIT0003302	WASHER 5,5X15X1,6
5	Z0400009009	CUP STATION SPACER
6	Z0400009007CY	CUP STATION PLATE
7	Z0400009008IC	CUP STATION HANDLE RAL2011
8	VIT0003305	WASHER 5,5X20X2
9	VIT0002469	SCREW HEAD TAP M3.5X10
10	VIT0002401	SCREW ST HEAD CAP M3.5X9.5
100	Z0400009121CL	HANDLE SUPPORT

www.rheavendors.com tel: 0039 02 966 551 fax: 0039 02 96 55 086 email: rheavendors@rheavendors.com exclusive property of rheavendors group

COIN BOX COVER

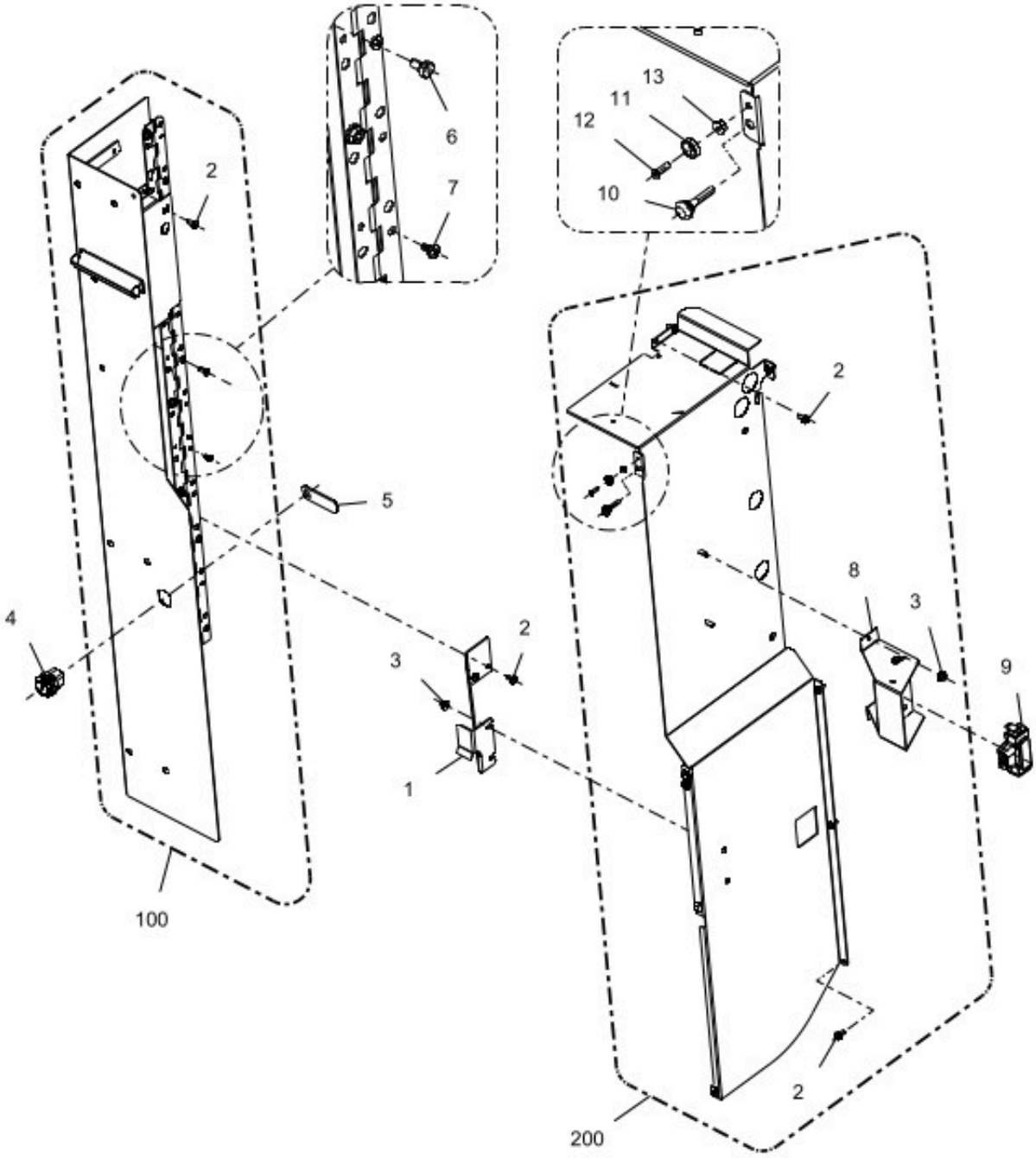

www.rheavendors.com tel: 0039 02 966 551 fax: 0039 02 96 55 086 email: rheavendors@rheavendors.com exclusive property of rheavendors group

COIN BOX COVER		
Pos.	**Code**	**Description**
1	Z002B170335NA	LOWER DOOR BRACKET
2	VIT0000011	SCREW HEAD TAP CAP M4X8
3	DAM0000056	NUT M4
4	SER0000028	LOCK MM20 + KEY 3480
5	Z002A158207	LOCK HOUSING SIDE COVER DOOR
6	4060010126	PAYM SYSTEM FIXING SCREW
7	VIT0002009	SCREW ST HEAD CAP M3.5X6.5
8	Z002B170317NA	SENSOR COVER
9	ELT0006813CL2	§ DISTANCE SENSOR
10	GUAA113001	BUMPER
11	ELT0030760	MAGNET D 10X3
12	VIT0000102	SCREW COUNT FLAT HEAD M3X10
13	VIT0004701	NUT M3
100	Z002B170094R1	§ PAY SYSTEM COVER
200	Z002B170091CL1	§ SIDE DOOR CLOSURE

www.rheavendors.com tel: 0039 02 966 551 fax: 0039 02 96 55 086 email: rheavendors@rheavendors.com exclusive property of rheavendors group

COIN BOX

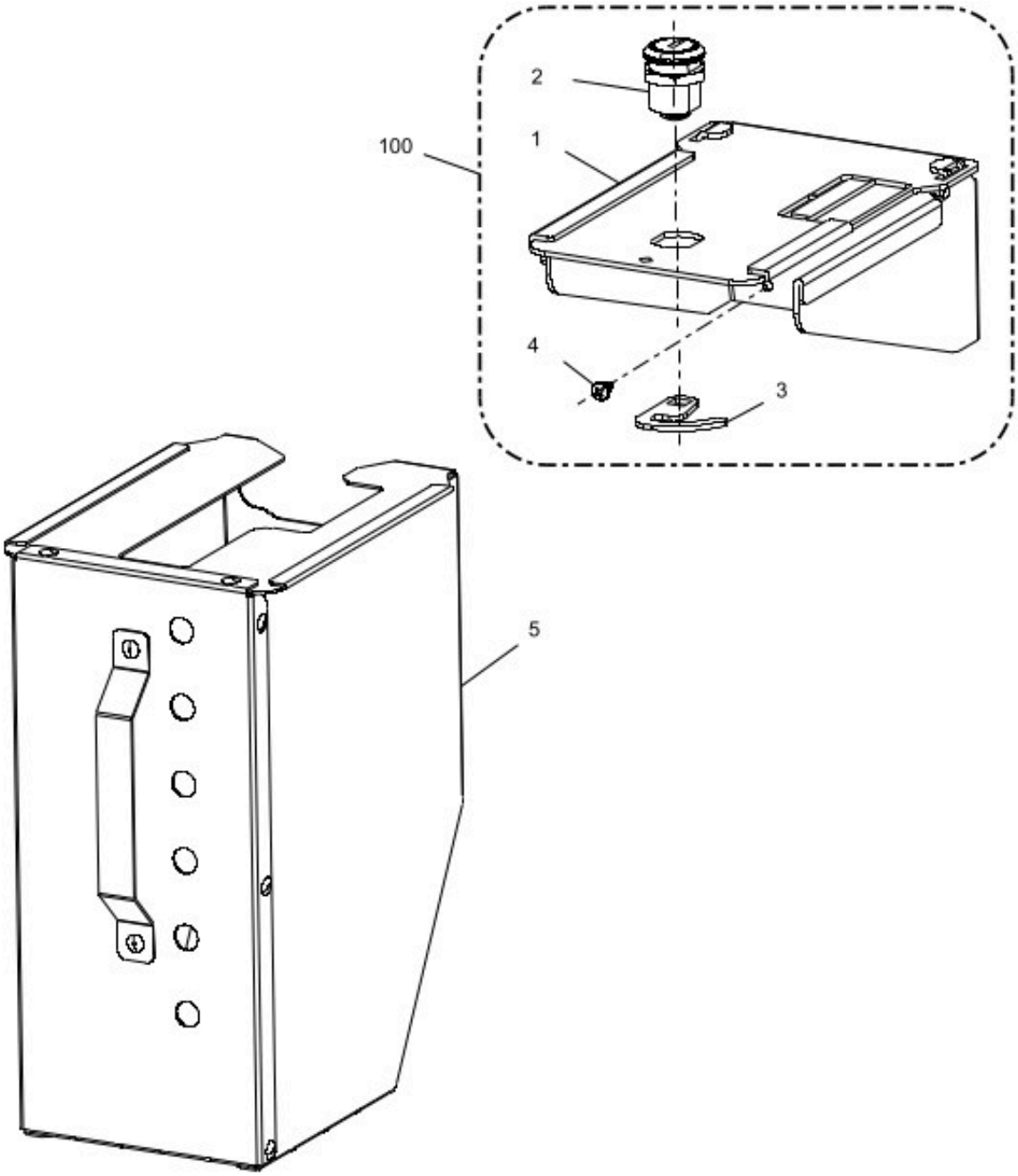

www.rheavendors.com tel: 0039 02 966 551 fax: 0039 02 96 55 086 email: rheavendors@rheavendors.com exclusive property of rheavendors group

COIN BOX		
Pos.	**Code**	**Description**
1	Z002A158208	COIN BOX SUPPORT
2	SER0000028	LOCK MM20 + KEY 3480
3	Z002A158209	LOCK HOUSING COIN BOX
4	VIT0000011	SCREW HEAD TAP CAP M4X8
5	Z002B170153CL1	§ COIN BOX
100	Z002B170150CL	§ COIN BOX SUPPORT

www.rheavendors.com tel: 0039 02 966 551 fax: 0039 02 96 55 086 email: rheavendors@rheavendors.com exclusive property of rheavendors group

products container

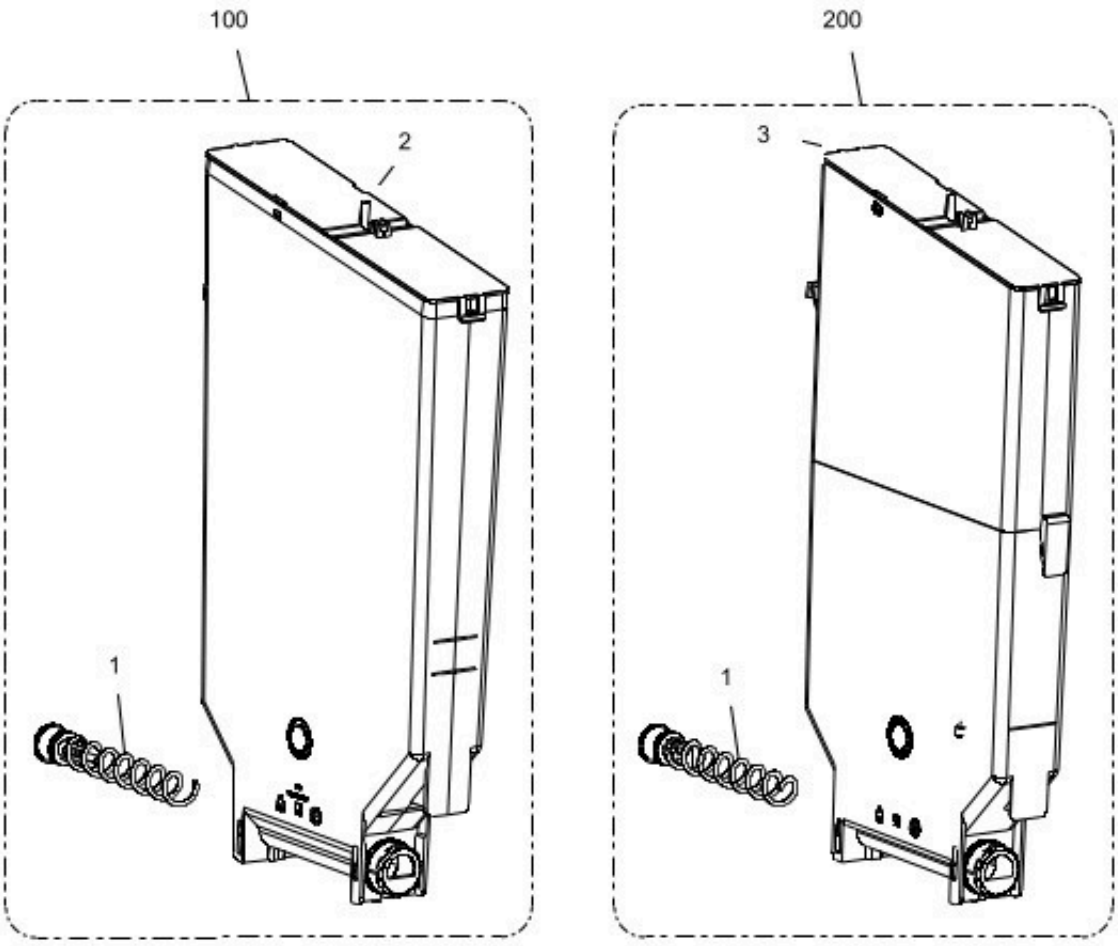

www.rheavendors.com tel: 0039 02 966 551 fax: 0039 02 96 55 086 email: rheavendors@rheavendors.com exclusive property of rheavendors group

products container		
Pos.	**Code**	**Description**
1/a	Z0230030013CL	§ SPIRAL 9
1/b	Z0230030014CL	§ SPIRAL 18
2	Z0232400027	CANISTER COVER 67
3	Z023B170033DO	CANISTER COVER 55
100/a	Z023B170005CL2	§ CONTAINER 67 R9
100/b	Z023B170002CL2	§ CONTAINER 67 R18
100/c	Z023B170004CL3	§ CONTAINER 67 AGIT.9
100/d	Z023B170001CL3	§ CONTAINER 67 AGIT.18
100/e	Z023B170006CL2	§ CONTAINER 67 VSF9
100/f	Z023B170003CL2	§ CONTAINER 67 VSF18
200/a	Z023B170054CL	§ CONTAINER 55 R9
200/b	Z023B170051CL	§ CONTAINER 55 R18
200/c	Z023B170053CL	§ CONTAINER 55 AGIT.9
200/d	Z023B170050CL	§ CONTAINER 55 AGIT.18
200/e	Z023B170055CL	§ CONTAINER 55 VSF9
200/f	Z023B170052CL	§ CONTAINER 55 VSF18

www.rheavendors.com tel: 0039 02 966 551 fax: 0039 02 96 55 086 email: rheavendors@rheavendors.com exclusive property of rheavendors group

PRODUCT CHUTE

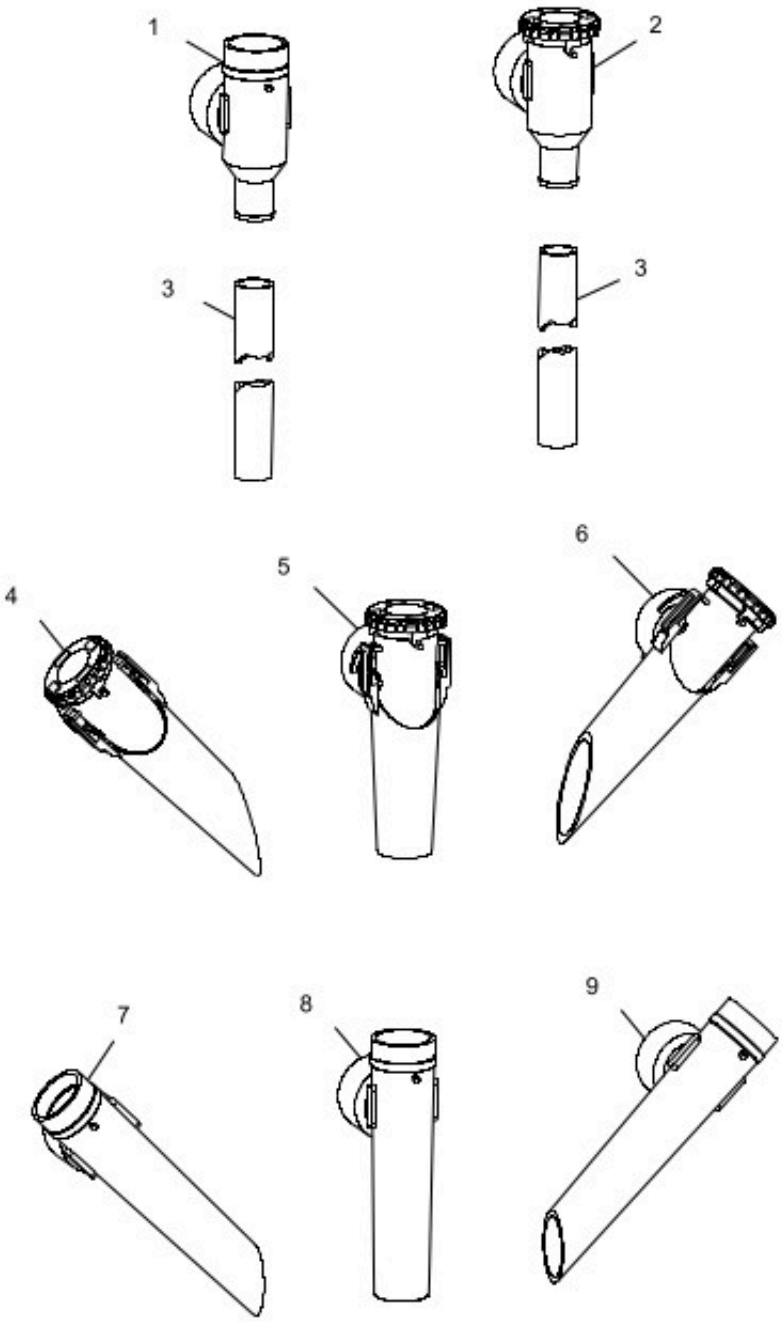

www.rheavendors.com tel: 0039 02 966 551 fax: 0039 02 96 55 086 email: rheavendors@rheavendors.com exclusive property of rheavendors group

PRODUCT CHUTE		
Pos.	**Code**	**Description**
1	Z0230016026R	SUGAR CHUTE + PLUG
2	Z0230016024R	§ SUGAR CHUTE + A/C PLUG
3/a	TSIL15/19T-10	SILICON HOSE 15X19 MT.10
3/b	TSIL15/19T-50	SILICON HOSE 15X19 MT.50
4	Z0230030304R3	§ INGREDIENT CHUTE-LEFT ORANGE
5	Z0232400042R	§ INGREDIENT CHUTE FRONTAL
6	Z0230030305R3	§ INGRED. CHUTE-RIGHT ORANGE
7	4001003072/22R1	§ INGREDIENT CHUTE-LEFT WHITE
8	4001003072/20R1	§ PROD.CHUTE FRONTAL WHITE
9	4001003072/21R1	§ INGREDIENT CHUTE-RIGHT WHITE

www.rheavendors.com tel: 0039 02 966 551 fax: 0039 02 96 55 086 email: rheavendors@rheavendors.com exclusive property of rheavendors group