vending machine

spare parts manual

www.rheavendors.com tel: 0039 02 966 551 fax: 0039 02 96 55 086 email: rheavendors@rheavendors.com exclusive property of rheavendors group

Cabinet Unit

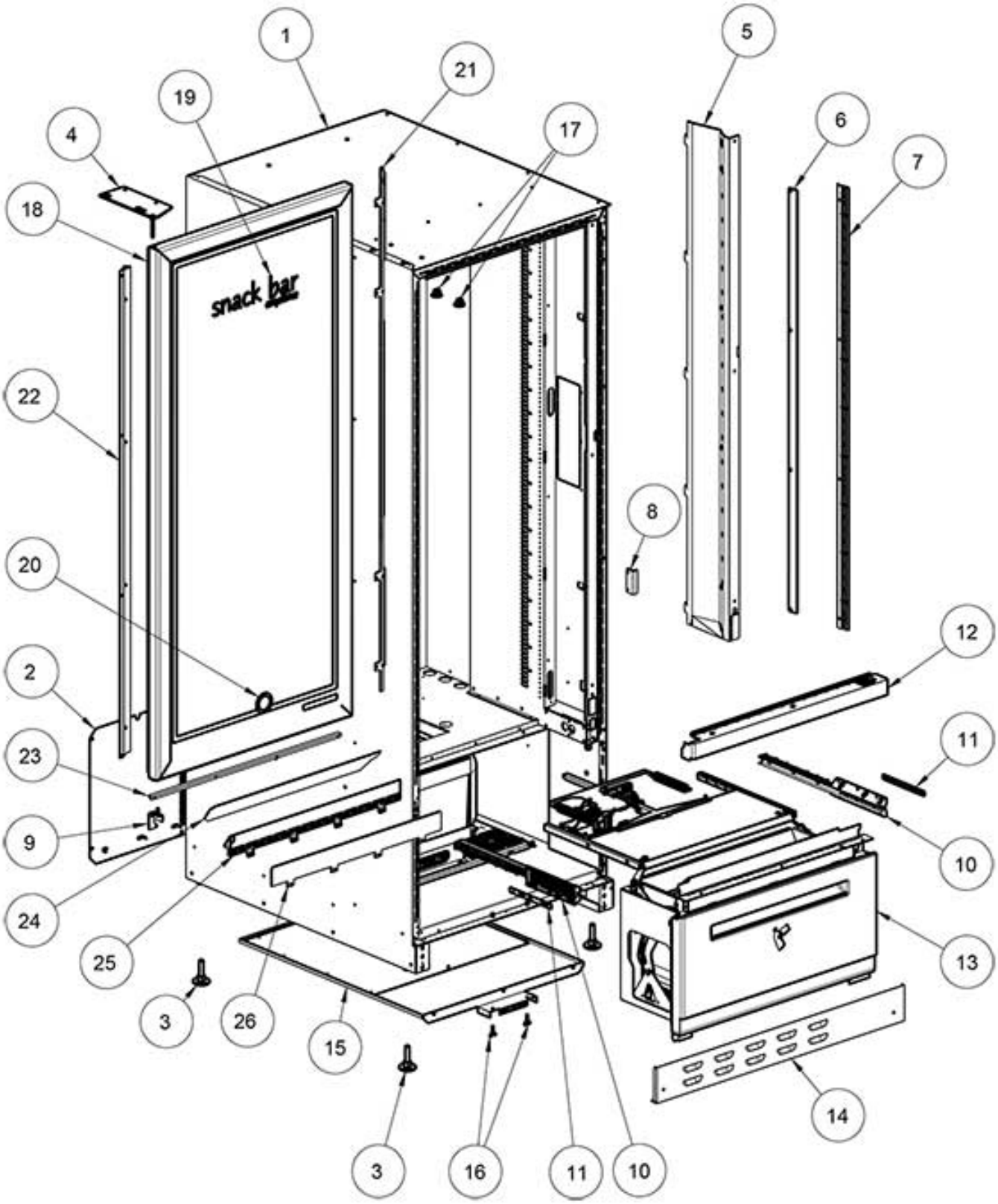

www.rheavendors.com tel: 0039 02 966 551 fax: 0039 02 96 55 086 email: rheavendors@rheavendors.com exclusive property of rheavendors group

Cabinet Unit		
Pos.	**Code**	**Description**
1/a	H501500004NACL1R	CABINET UNIT STD VERSION Include right side
1/b	H501500004NACL2R	CABINET UNIT PRO VERSION Include right side
1/c	H501500004NACL3R	CABINET UNIT ALL FOOD VERSION Include right side
2	H501500007	REAR GRID
3	Z0010013208	MACHINE FOOT
4	H501500008-VXD	UPPER HINGE
5	H501101022-VAE	LAMP LED COVER
6	H61103073	GLASS FOR RIGHT LAMP LED COVER
7	H601101041	LEFT LAMP LED COMPLET 3x6 LED
8	H501560007	Bracket for blocking sliding door EUR7
9	H501500006-VXI	LOWER HINGE INOX
10	H601500042	GUIDE PANEL AND FTCA SUPPORT
11	H00067041	IR FTCA BARRIER BOARD
12	H501500059-VNA	CENTRAL CROSSBAR EXTERNAL PART
13/a	Z001A092400NACL1R	§ DISPENSER UNIT LZS
13/b	Z001A092400NACL2R	§ DISPENSER UNIT LZS PRO
14	Z001A092009NACL1R	§ CABINET SKIRTING 9005
15	Z001A092481CL1R	§ AIR FILTER FRIDGE
16	VIT0007040	SCREW M4X15 (THUMBSCREW)
17	H00015071	HOLE COVERING PLUG D.14-21 MM
18	VETA092021NAR	§ DOUBLE GLASS WINDOW + FRAME
19	Z101A092001	WRITTEN ADHESIVE SHOWCASE
20	Z101A092002	WINDOW STICKER SYMBOL
21	H501500074-VDA	ANTI VANDALISM BRACKET
22	H501101151NA	LIGHT 2° LED L.H. ASSEMBLY
23	H501500069-VXD	SUPPORT BRACKET FOR SEAL
24	H501101015	ADHESIVE PLASTICS FOR GLASS PR
25	H501101012R	§GLASS WINDOW LOWER PROTECTION
26	H501101016	VERTICAL ADHESIVE PLASTICS FOR

www.rheavendors.com tel: 0039 02 966 551 fax: 0039 02 96 55 086 email: rheavendors@rheavendors.com exclusive property of rheavendors group

Dispenser unit

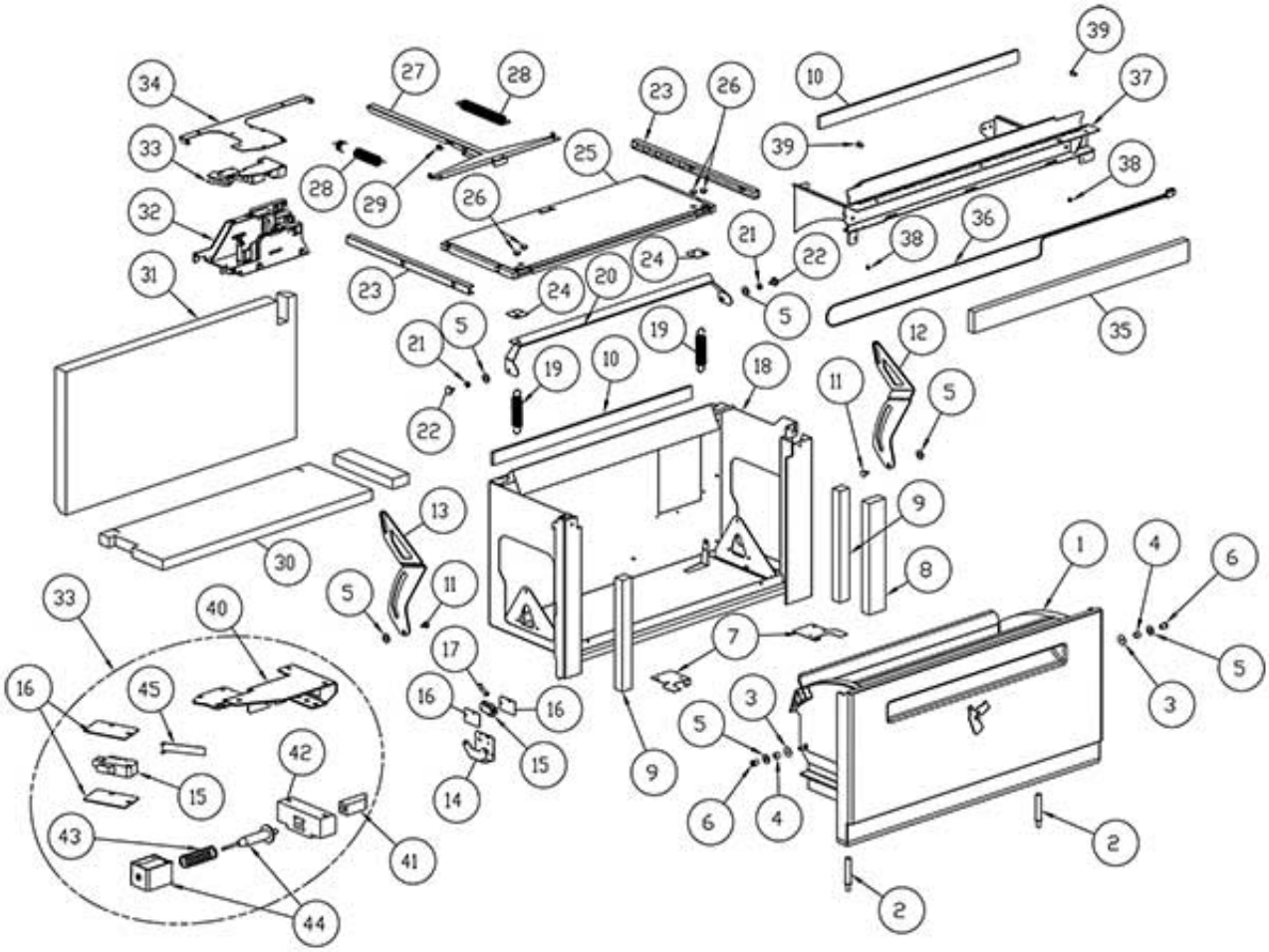

www.rheavendors.com tel: 0039 02 966 551 fax: 0039 02 96 55 086 email: rheavendors@rheavendors.com exclusive property of rheavendors group

Dispenser unit		
Pos.	**Code**	**Description**
1	Z001A092306NACL1	§ COMPLETE DISPENSER UNIT
2	H601100041	PISTON OF SLOWING-DOWN BLM
3	Z001A092448	WASHER 18x5,4x1
4	Z001A092508	SOCKET 2 ANTITHEFT MOVEMENT
5	Z001A092449	WASHER 17x8,3x1
6	Z001A092505	STUD SOCKET BOX
7	Z001A092450	PLATE BEAT SLOW MOTION
8	Z001D503024	INSUL.VEOL.1CLOSING FRIDGE EL7
9	Z001D503025	INSUL.VEOL.2CLOSING FRIDGE EL7
10	H00012013	INSULATING VEOLENE 6 X 25 MM
11	Z001A092446	STUD LOWER MOVEMENT THEFT
12	Z001A092444	LEVER RIGHT THEFT MECHANICAL
13	Z001A092445	LEVER LEFT THEFT MECHANICAL
14	Z001A092452	SUPPORT SWITCH CLOSING BOX
15	H00027003	MICROSWITCH CROUZET
16	H00012002	MICROSWITCH PLATE
17	H00027012	MICROSWITCH LEVER
18	Z001A092440CLR	§ SHEET METAL L CLOSING FRIDGE
19	Z001A092439	CLOSED SPRING BOX PROD.REDUCED
20	Z001A092502	LOCKING LEVERS ANTITHEFT PANEL
21	Z001A092507	SOCKET 1 ANTITHEFT MOVEMENT
22	Z001A092451	STUD UPPER MOVEMENT THEFT
23	H501500034	SKATER FOR ANTI-THEFT PANEL
24	Z001A092509	SHEET METAL FIXING FRONT PANEL
25	H501500030	ANTITHEFT SLIDING PANEL
26	H00015076	HOLE COVERING CUP D. 10
27	Z001A092503NA	SHEET BLOCK PANEL BURGLAR
28	H501530019	REAR SPRING FOR DISPENSER UNIT
29	Z0020040235	FLAP PLUG
30	H501400045	INSULATING FRIDGE CLOSING PANE
31	H501400046	INSULATING FRIDGE CLOSING PANE
32	H501500032	ANTI-THEFT MOTOR SUPPORT
33	Z001A092333CL1	§ COMPLETE MAGNET GROUP ANTITH
34	Z001A092504	SUPPORT MAGNET LOCK DOOR
35	Z001D503023	INSUL. VEOL. CROSS INTERN. EL7
36	H501510023	HEATING ELEMENT
37	Z001A092458CLR	§ CROSS CENTRAL INTER. CABINET
38	DAM0000046	EXPANSION PLASTIC RIVET
39	Z0020018061	SELECTION BUTTON PLUG
40	H601100030	MAGNET BLOCK 'PUSH' SUPPORT
41	H601100039-VXC	HEAD FOR ELECTROMAGNET PIVOT
42	H601100053	GUIDE BLOCK FOR PIN MAGNET
43	H601100034	SPRING FOR MAGNET PIN
44	DAM0000021	ELECTROMAGNET
45	H00027015	MICROSWITCH LEVER

www.rheavendors.com tel: 0039 02 966 551 fax: 0039 02 96 55 086 email: rheavendors@rheavendors.com exclusive property of rheavendors group

Sliding Module (std lock)

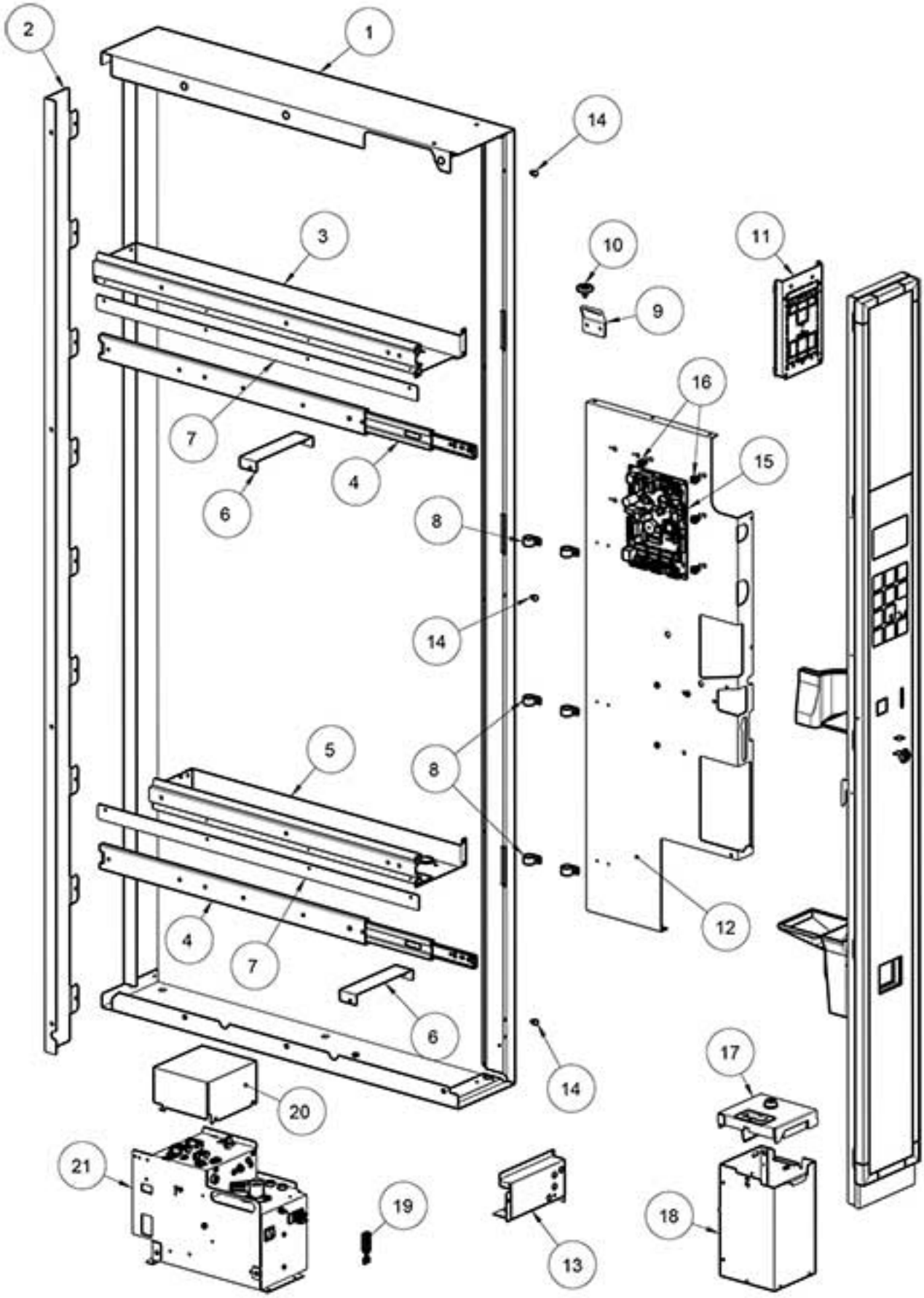

www.rheavendors.com tel: 0039 02 966 551 fax: 0039 02 96 55 086 email: rheavendors@rheavendors.com exclusive property of rheavendors group

Sliding Module (std lock)		
Pos.	**Code**	**Description**
1	H502500050-VNA-RIC	MPE CABINET RIGHT FLANK
2	H502500053	Rear coupling for right-flank MPE-EUR7
3	Z002A092042	BEAM GUIDE MODULE PAYMENT
4	H501500068	GUIDES SLIDING DOOR (BEESLIDE)
5	H502500045	SLIDING BEAM FOR GUIDE
6	H502500044	REINFORCING BRACKET FOR MODULE
7	H502500041	THICKNESS SHEET METAL FOR GUIDES
8	FASC000557	CLIP FOR CABLE D. 15,9
9	Z001A092249	UP BRACK.WHEEL SLIDE RAIL MOD.
10	H61302015	DRAWER SLIDING WHEEL
11	Z002A092099	REMOVABLE PLATE FOR READERS
12/a	Z002A092025	CHASSIS SIDE MODULE from serial 20212600765
12/b	Z002A092058	CHASSIS SIDE MODULE NEW Up to serial 20212600766
13	Z001A092008NA	SUPPORT BASE MODULE SIDE 9005
14	Z0020040235	FLAP PLUG
15	H00120001-01	CPU BOARD
16	H00040092	SPACER H.6,4
17/a	H502120017-RIC	COIN BOX LID (STD LOCK)
17/b	H502120018-RIC	COIN BOX LID (RIELDA LOCK)
18	H502120010-RIC	COIN BOX WITH HANDLE
19	H00027007	SAFETY SWITCH KEY
20	H502510006	ELECTRICAL BOX COVER
21	H503510050-4E	ELECTRICAL BOX 230V 50/60HZ

www.rheavendors.com tel: 0039 02 966 551 fax: 0039 02 96 55 086 email: rheavendors@rheavendors.com exclusive property of rheavendors group

Sliding Module (rielda lock)

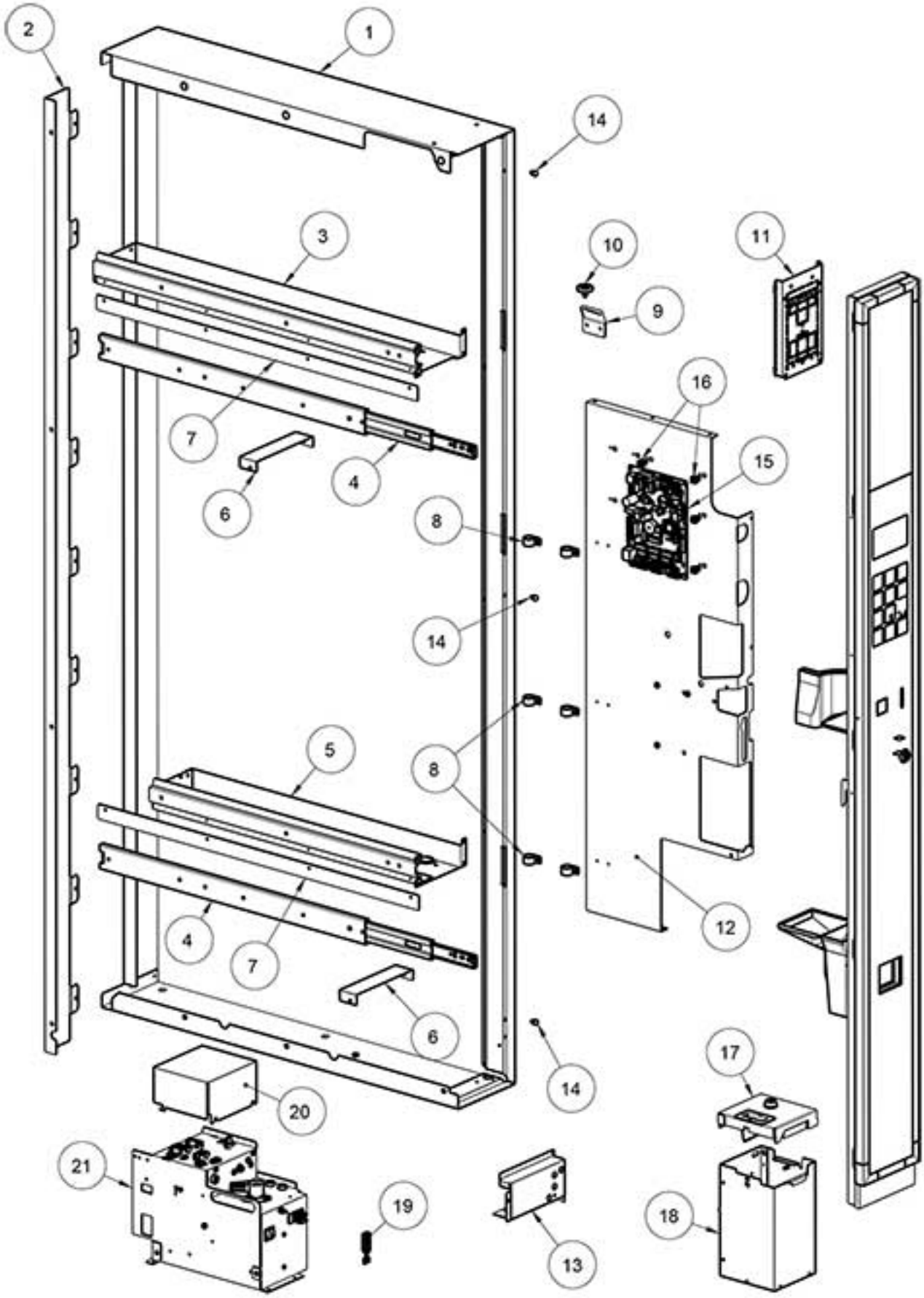

www.rheavendors.com tel: 0039 02 966 551 fax: 0039 02 96 55 086 email: rheavendors@rheavendors.com exclusive property of rheavendors group

Sliding Module (rielda lock)		
Pos.	**Code**	**Description**
1	H502500050-VNA-RIC	MPE CABINET RIGHT FLANK
2	H502500053	Rear coupling for right-flank MPE-EUR7
3	Z002A092042	BEAM GUIDE MODULE PAYMENT
4	H501500068	GUIDES SLIDING DOOR (BEESLIDE)
5	H502500045	SLIDING BEAM FOR GUIDE
6	H502500044	REINFORCING BRACKET FOR MODULE
7	H502500041	THICKNESS SHEET METAL FOR GUIDES
8	FASC000557	CLIP FOR CABLE D. 15,9
9	Z001A092249	UP BRACK.WHEEL SLIDE RAIL MOD.
10	H61302015	DRAWER SLIDING WHEEL
11	Z002A092099	REMOVABLE PLATE FOR READERS
12/a	Z002A092025	CHASSIS SIDE MODULE from serial 20210200043
12/b	Z002A092058	CHASSIS SIDE MODULE NEW Up to serial 20210200044
13	Z001A092008NA	SUPPORT BASE MODULE SIDE 9005
14	Z0020040235	FLAP PLUG
15	H00120001-01	CPU BOARD
16	H00040092	SPACER H.6,4
17/a	H502120017-RIC	COIN BOX LID (STD LOCK)
17/b	H502120018-RIC	COIN BOX LID (RIELDA LOCK)
18	H502120010-RIC	COIN BOX WITH HANDLE
19	H00027007	SAFETY SWITCH KEY
20	H502510006	ELECTRICAL BOX COVER
21	H503510050-4E	ELECTRICAL BOX 230V 50/60HZ

www.rheavendors.com tel: 0039 02 966 551 fax: 0039 02 96 55 086 email: rheavendors@rheavendors.com exclusive property of rheavendors group

Module aesthetic (std lock)

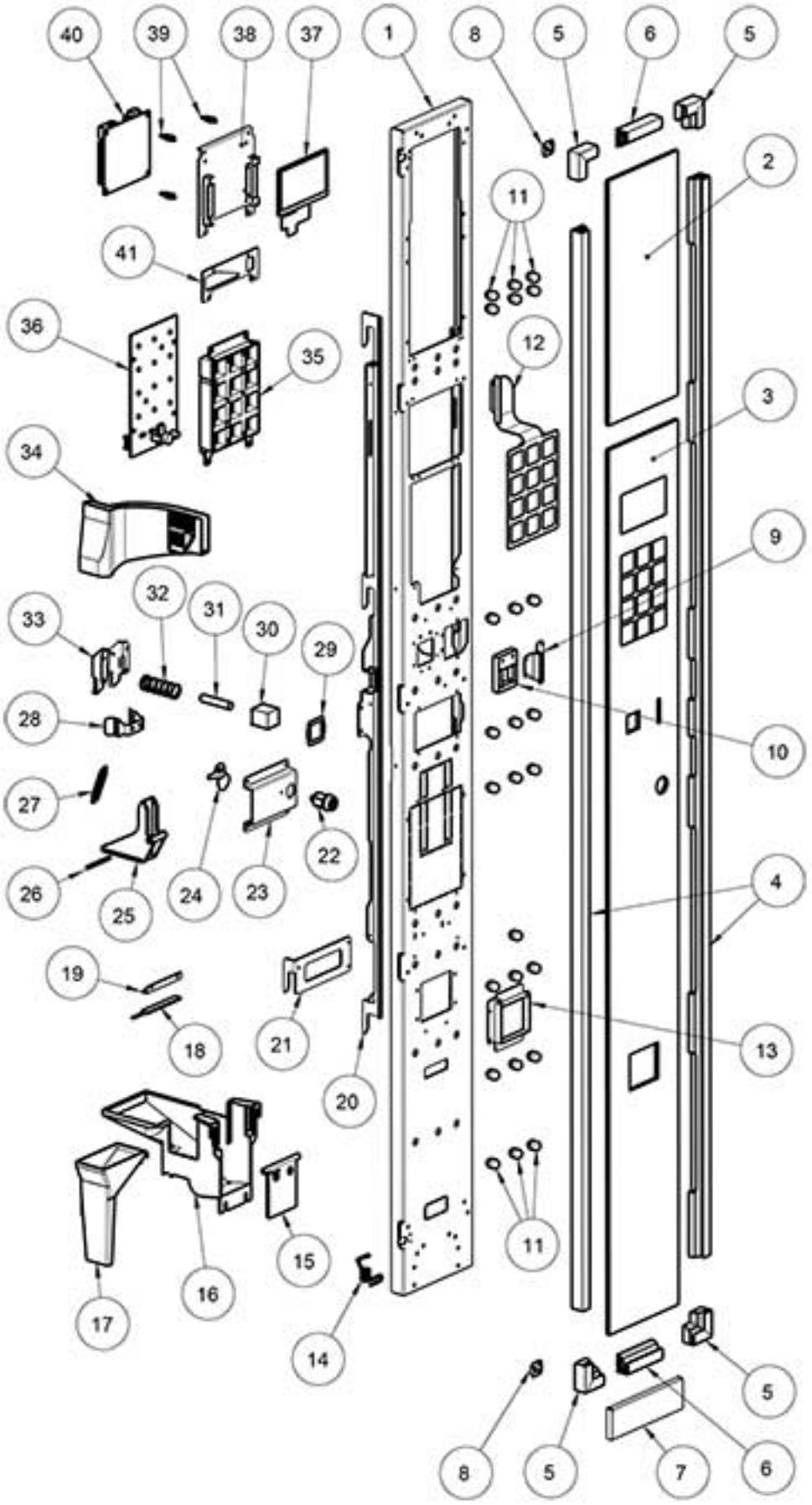

www.rheavendors.com tel: 0039 02 966 551 fax: 0039 02 96 55 086 email: rheavendors@rheavendors.com exclusive property of rheavendors group

Module aesthetic (std lock)		
Pos.	**Code**	**Description**
1/a	Z002A092003NA	FRAME FRONT SIDE MODULE 9005 from serial 20212600765
1/b	Z002A092050NA	FRAME FRONT SIDE MODULE NEW Up to serial 20212600766
2/a	Z002A092097NA	GRAPHIC PANEL
2/b	Z002A092097AE	FRONT UP PANEL MODULE 9010
3/a	Z002A092090NA	FRONT PANEL MODULE SIDE 9005
3/b	Z002A092090AE	FRONT PANEL MODULE SIDE 9005
4	Z002A092092NA	PROFILE VERTICAL SIDE MODULE
5	Z0020054095NA	CORNER PROFILE 9005
6	Z002A092094NA	PROFILE HORIZONTAL SIDE MOD.
7	Z002A092091NA	LOWER PROFILE MODULE 9005
8	Z002A092096	PLATE HOOKING ANGULAR
9	Z002A092030NA	CONNECTOR INPUT COINS 9005
10	Z002A092035	GUIDE KEY CHANGEGIVER
11	GUA0011030	FOOT PUSH ON BLACK
12	Z002A092110	KEYBOARD CAPACITIVE 12T
13	Z002A092040NA	CONNECTOR CHUTE CHANGEGIVER
14	H502100043	SAFETY SWITCH SPRING
15	Z0020038144XC	COINS RETURN FLAP CHROME
16	H502120041	COINS RETURN CHUTE
17	H502120042	COIN BOX CHUTE
18	Z002A092172	LED LIGH.ENTR.COINS CHANGEGIV.
19	Z002A092173	LIGHTING R/R COINS SUPPORT
20/a	Z002A092006	LEVER RIGHT SIDE MODULE from serial 20212600765
20/b	Z002A092051	LEVER RIGHT SIDE MODULE NEW Up to serial 20212600766
21/a	H502130014	Single handle carillon for MPE-EUR7 module from serial 20212600765
21/b	Z002A092052	SINGLE LOCK MODULE SIDE NEW Up to serial 20212600766
22/a	DAM0000040	LOCK
22/b	DAM0000013	LOCK RIELDA
23/a	Z002A092005	BRACKET LOCK from serial 20212600765
23/b	Z002A092053	BRACKET LOCK NEW Up to serial 20212600766
24/a	Z002A092007	LINER LOCK MODULE SIDE from serial 20212600765
24/b	Z002A092055	LINER LOCK MODULE SIDE NEW Up to serial 20212600766
25	H502120033	CHANGE RETURN LEVER SQUARE
26	H61120040	COIN REJECTION LEVER PIN
27	H00016006	SPRING FOR COIN RETURN LEVER
28	H502120039	SPRING FOR COIN RETURN LEVER
29	Z002D605034	DIAPHRAGM FOR R/R SUPPORT
30	4050010072XC	COIN RETURN BUTTON CHROMO
31	H00040082	COIN RETURN PIN
32	H00016005	SPRING PUSH BUTTON R/R
33	Z002A092015	SUPPORT REJECT MONEY MODULE
34	H502120031	COIN ENTRY CHANNEL
35	Z002A092112	SUPPORT BOARD 12 LED
36	SCHA092001	KEYPAD LIGHTING BOARD
37	ELT0030426	LCD TFT 4,3
38	Z002A092120CLR	§ SUPPORT DISPLAY 4.3"
39	ELE0062003	BOARD SUPPORT

www.rheavendors.com tel: 0039 02 966 551 fax: 0039 02 96 55 086 email: rheavendors@rheavendors.com exclusive property of rheavendors group

Module aesthetic (std lock)		
40	SCH0009811	GPU 4.3inch
41	Z002A092125	SPACER FLAT KEYBOARD

www.rheavendors.com tel: 0039 02 966 551 fax: 0039 02 96 55 086 email: rheavendors@rheavendors.com exclusive property of rheavendors group

Module aesthetic (rielda lock)

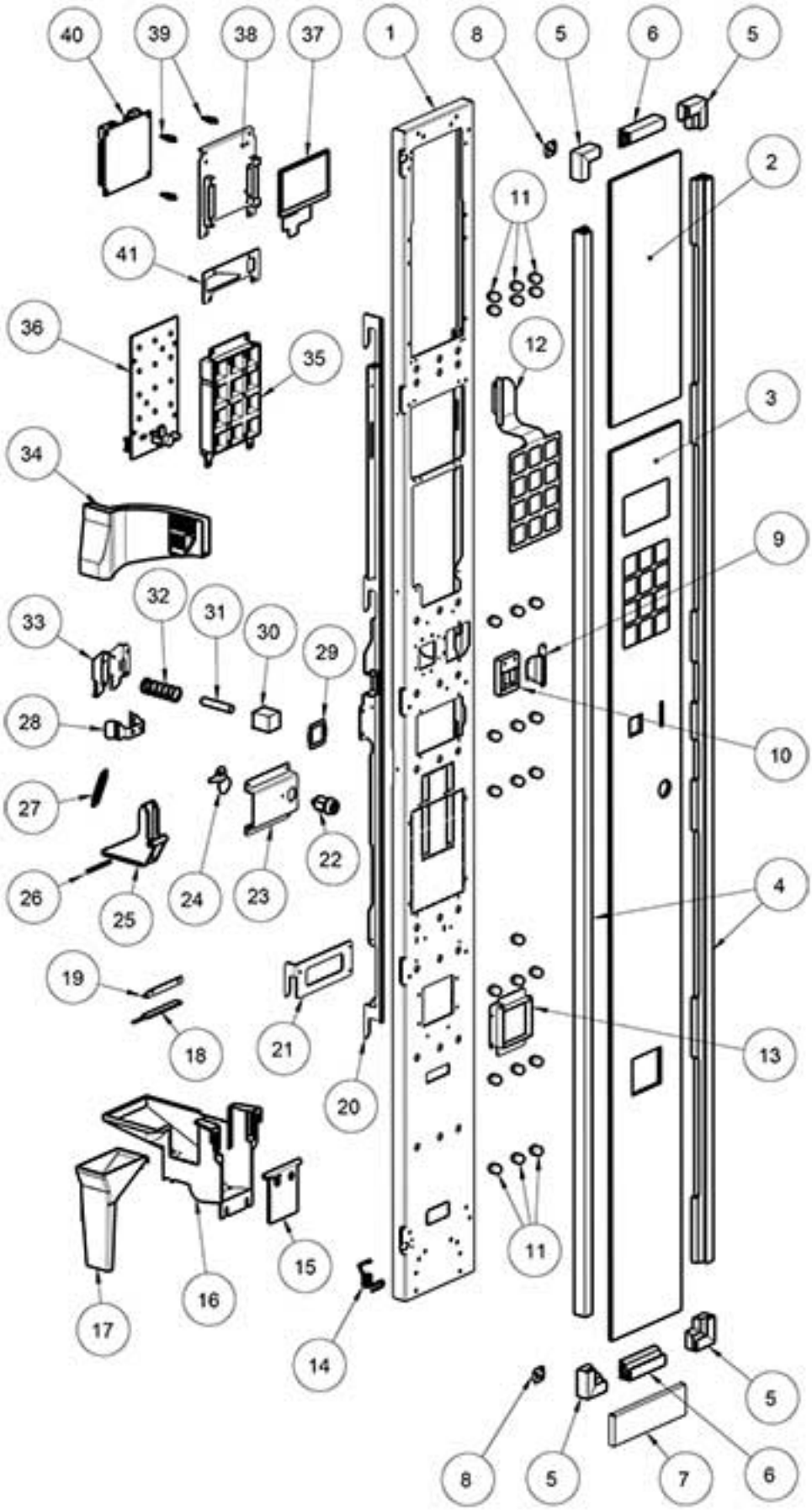

www.rheavendors.com tel: 0039 02 966 551 fax: 0039 02 96 55 086 email: rheavendors@rheavendors.com exclusive property of rheavendors group

Module aesthetic (rielda lock)		
Pos.	**Code**	**Description**
1/a	Z002A092003NA	FRAME FRONT SIDE MODULE 9005 from serial 20210200043
1/b	Z002A092050NA	FRAME FRONT SIDE MODULE NEW Up to serial 20210200044
2/a	Z002A092097NA	GRAPHIC PANEL
2/b	Z002A092097AE	FRONT UP PANEL MODULE 9010
3/a	Z002A092090NA	FRONT PANEL MODULE SIDE 9005
3/b	Z002A092090AE	FRONT PANEL MODULE SIDE 9005
4	Z002A092092NA	PROFILE VERTICAL SIDE MODULE
5	Z0020054095NA	CORNER PROFILE 9005
6	Z002A092094NA	PROFILE HORIZONTAL SIDE MOD.
7	Z002A092091NA	LOWER PROFILE MODULE 9005
8	Z002A092096	PLATE HOOKING ANGULAR
9	Z002A092030NA	CONNECTOR INPUT COINS 9005
10	Z002A092035	GUIDE KEY CHANGEGIVER
11	GUA0011030	FOOT PUSH ON BLACK
12	Z002A092110	KEYBOARD CAPACITIVE 12T
13	Z002A092040NA	CONNECTOR CHUTE CHANGEGIVER
14	H502100043	SAFETY SWITCH SPRING
15	Z0020038144XC	COINS RETURN FLAP CHROME
16	H502120041	COINS RETURN CHUTE
17	H502120042	COIN BOX CHUTE
18	Z002A092172	LED LIGH.ENTR.COINS CHANGEGIV.
19	Z002A092173	LIGHTING R/R COINS SUPPORT
20/a	Z002A092006	LEVER RIGHT SIDE MODULE from serial 20210200043
20/b	Z002A092051	LEVER RIGHT SIDE MODULE NEW Up to serial 20210200044
21/a	H502130014	Single handle carillon for MPE-EUR7 module from serial 20210200043
21/b	Z002A092052	SINGLE LOCK MODULE SIDE NEW Up to serial 20210200044
22/a	DAM0000040	LOCK
22/b	DAM0000013	LOCK RIELDA
23/a	Z002A092005	BRACKET LOCK from serial 20210200043
23/b	Z002A092053	BRACKET LOCK NEW Up to serial 20210200044
24/a	Z002A092007	LINER LOCK MODULE SIDE from serial 20210200043
24/b	Z002A092055	LINER LOCK MODULE SIDE NEW Up to serial 20210200044
25	H502120033	CHANGE RETURN LEVER SQUARE
26	H61120040	COIN REJECTION LEVER PIN
27	H00016006	SPRING FOR COIN RETURN LEVER
28	H502120039	SPRING FOR COIN RETURN LEVER
29	Z002D605034	DIAPHRAGM FOR R/R SUPPORT
30	4050010072XC	COIN RETURN BUTTON CHROMO
31	H00040082	COIN RETURN PIN
32	H00016005	SPRING PUSH BUTTON R/R
33	Z002A092015	SUPPORT REJECT MONEY MODULE
34	H502120031	COIN ENTRY CHANNEL
35	Z002A092112	SUPPORT BOARD 12 LED
36	SCHA092001	KEYPAD LIGHTING BOARD
37	ELT0030426	LCD TFT 4,3
38	Z002A092120CLR	§ SUPPORT DISPLAY 4.3"
39	ELE0062003	BOARD SUPPORT

www.rheavendors.com tel: 0039 02 966 551 fax: 0039 02 96 55 086 email: rheavendors@rheavendors.com exclusive property of rheavendors group

Module aesthetic (rielda lock)		
40	SCH0009811	GPU 4.3inch
41	Z002A092125	SPACER FLAT KEYBOARD

www.rheavendors.com tel: 0039 02 966 551 fax: 0039 02 96 55 086 email: rheavendors@rheavendors.com exclusive property of rheavendors group

Cooling unit

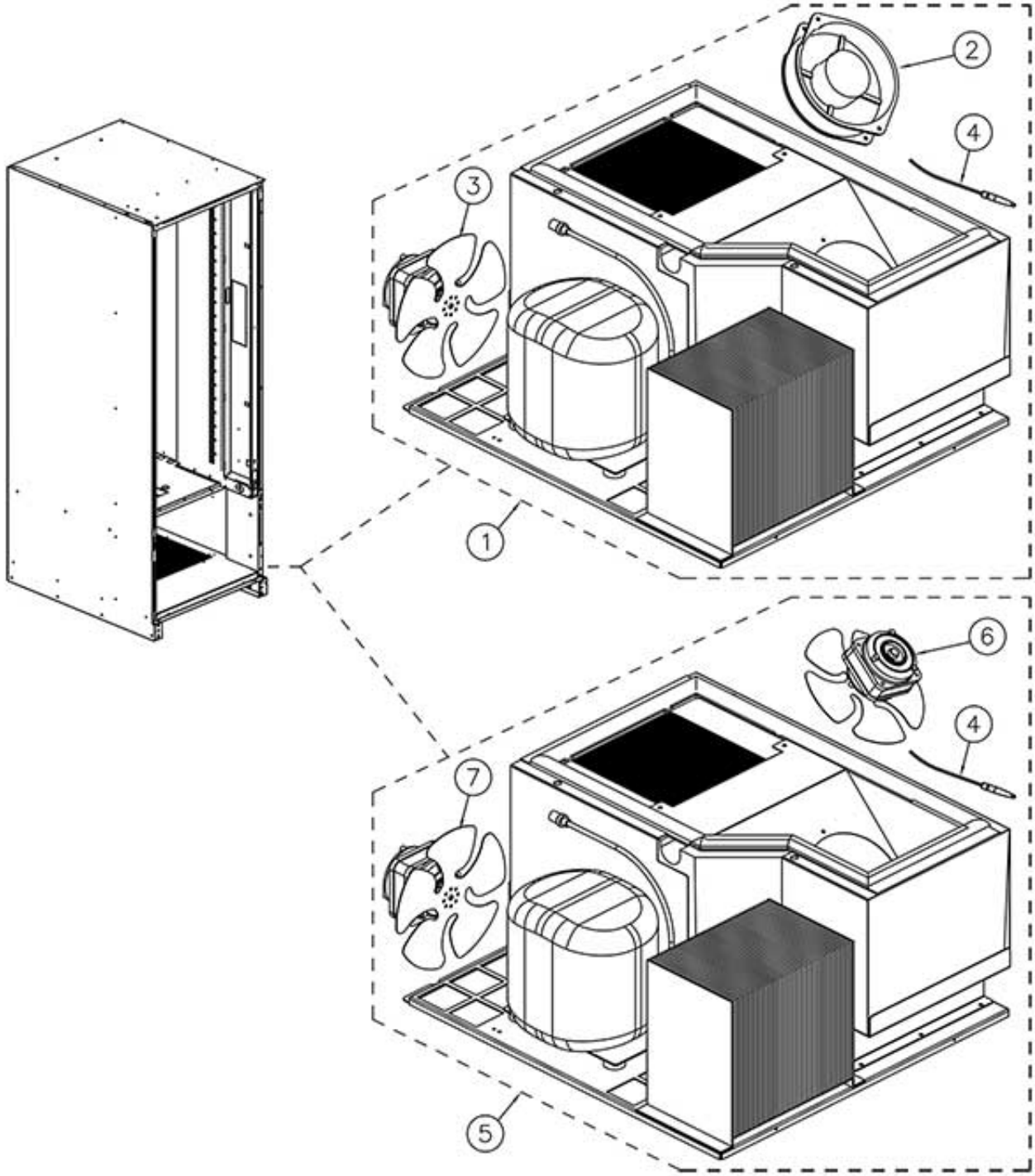

www.rheavendors.com tel: 0039 02 966 551 fax: 0039 02 96 55 086 email: rheavendors@rheavendors.com exclusive property of rheavendors group

Cooling unit		
Pos.	**Code**	**Description**
1	FRID501004-4E	COOLING UNIT STD 134A 50/60HZ
2	ELE0000481	ELECTRONIC FAN 24V DC
3	ELE0000483	FAN FOR COOLING UNIT
4	H00069030	PROBE FOR COOLING UNIT
5	FRID501005-4E	COOLING UNIT SUP. 134A 50/60HZ
6	ELE0000482	FAN FOR COOLING UNIT
7	ELE0000484	FAN FOR COOLING UNIT

www.rheavendors.com tel: 0039 02 966 551 fax: 0039 02 96 55 086 email: rheavendors@rheavendors.com exclusive property of rheavendors group

Electrical box

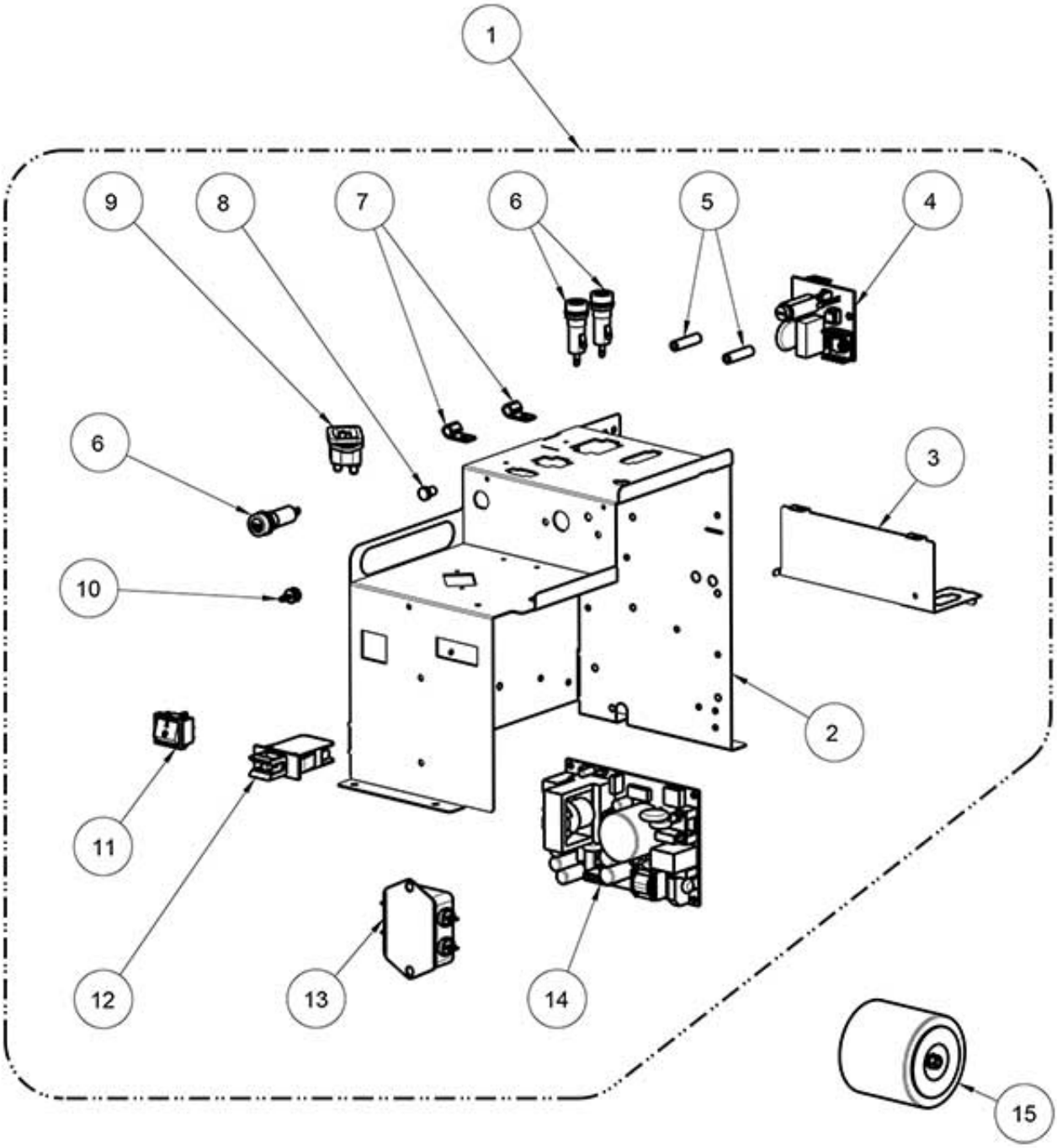

www.rheavendors.com tel: 0039 02 966 551 fax: 0039 02 96 55 086 email: rheavendors@rheavendors.com exclusive property of rheavendors group

Electrical box		
Pos.	**Code**	**Description**
1	H503510050-4E	ELECTRICAL BOX 230V 50/60HZ
2	H502510004	ELECTRICAL BOX FRAME
3	H502510003	EUR7-MPE Electrical box separator
4	H00065102-01	TRIACK/FUSE BOARD
5	H00040051	SPACER 8X25
6	H00029006	FUSE HOLDER
7	FASC000553	Clips for cable D. 6,4 (WHC-250-01)
8	Z0020018061	SELECTION BUTTON PLUG
9	H00020071	PANEL PLUG WITH SCREWS
10	H00025055	SPACER H.6
11	H00027030	ELECTRICAL BOX SWITCH
12	ELE0002009	BIPOLAR SWITCH 15A 250V
13	ELE0009065	NOISE FILTER 6A FN2030-6-06
14/a	SCHA161002	SWITCHING BOARD from serial 20214700000
14/b	SCHA161002CL	§SWITCHING BOARD+CABLE Up to serial 20214699999
15/a	H601511005-1E	TRANSFORMER 230/24V 60W
15/b	H501510030-1E-RIC	KIT FOR EXECUTIVE OPTION

www.rheavendors.com tel: 0039 02 966 551 fax: 0039 02 96 55 086 email: rheavendors@rheavendors.com exclusive property of rheavendors group

Flexspir Drawer Unit

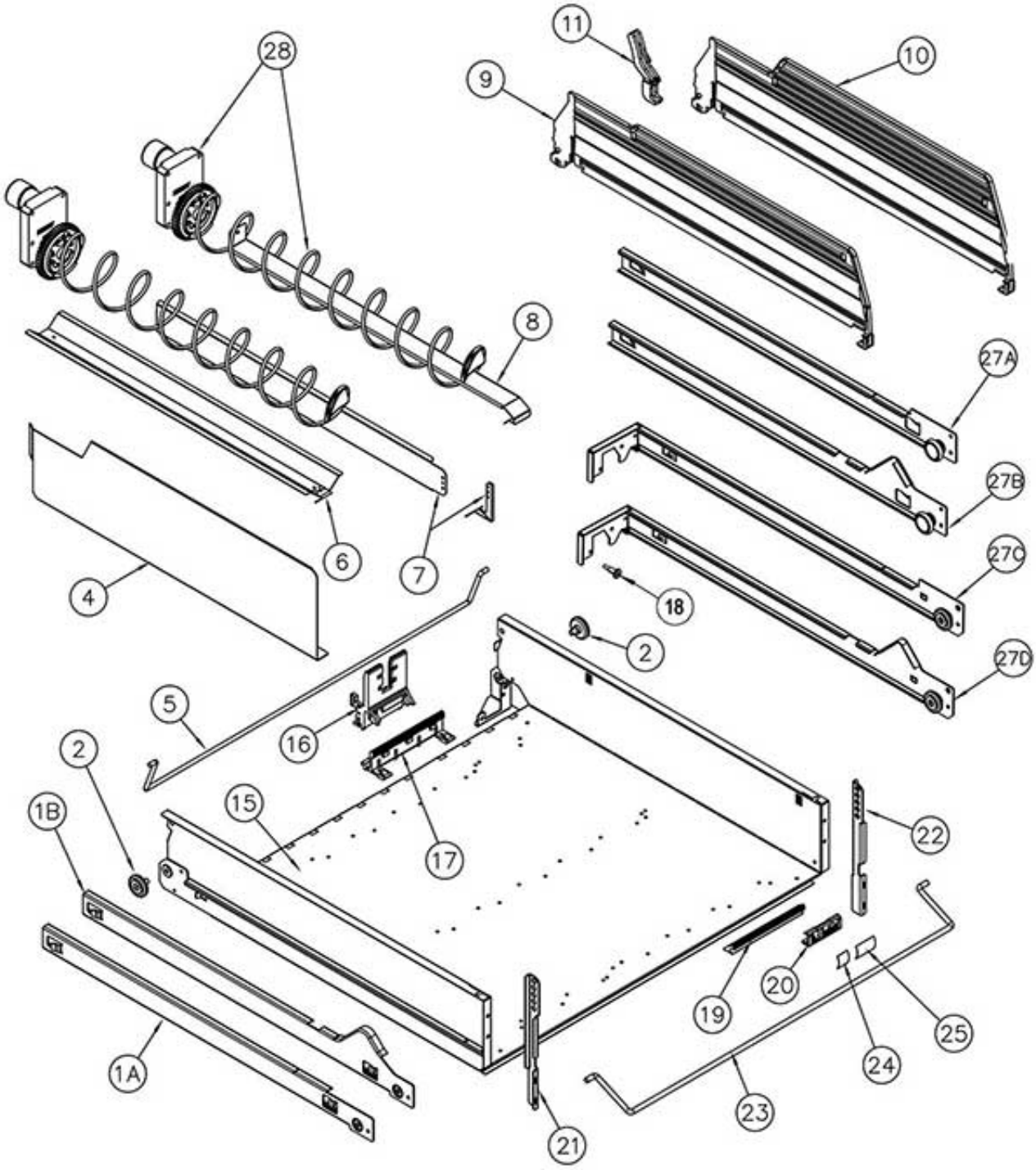

www.rheavendors.com tel: 0039 02 966 551 fax: 0039 02 96 55 086 email: rheavendors@rheavendors.com exclusive property of rheavendors group

Flexspir Drawer Unit		
Pos.	**Code**	**Description**
1/a	H501300003CL1	LEFT GUIDE + WHEEL
1/b	H501301003CL1	RECLINING LEFT GUIDE + WHEEL
2	H61302015	DRAWER SLIDING WHEEL
4	H601300024-VNA	METAL PRODUCTS SEPARATOR
5	H501300018	SUPPORT CABLE DRAWER ROD
6	H601300008-VNA	PRODUCT CONVEYOR SPIRAL
7	H601301026-RIC	SPIRAL SEPARATOR COMPLETE
8	H601300017	PRODUCT SUPPORT BRIDGE
9	H601301019	PLASTIC PRODUCT SEPARATOR LOW
10	H601301024	PLASTIC PRODUCT SEPARATOR HIGH
11	H601301020	LEVER FOR PLASTIC SEPARATOR
15	H501300013	DRAWER FRAME WITH GUIDES
16	H601300035	SUPPORT SINGLE-MOTOR DRAWER
17	H601300036	SUPPORT FOR DRAWER MOTOR
18	H00040065	SPACER 12,5X8
19	H601300037	SUPPORT FOR PRICE HOLDER
20	H601300016	PRICE HOLDER DRAWER
21	H601300065-VNA	LEFT SUPPORT FOR BOTTLES STOP
22	H601300066-VNA	RIGHT SUPPORT FOR BOTTLES STOP
23	H501300067	MOBILE ROD FOR BOTTLE DROP STOPPER
24	H501320011	SHEET POSITIONS
25	H601320021	SHEET PRICES
27/a	H501300002CL1	RIGHT GUIDE + WHEEL
27/b	H501301002CL1	RECLINING RIGHT GUIDE+INOX WHE
27/c	H501300005CL1	RIGHT GUIDE + WHEEL
27/d	H501301005CL1	RECLINING RIGHT GUIDE + WHEEL
28		See table Spiral unit

www.rheavendors.com tel: 0039 02 966 551 fax: 0039 02 96 55 086 email: rheavendors@rheavendors.com exclusive property of rheavendors group

Standard Drawer Unit

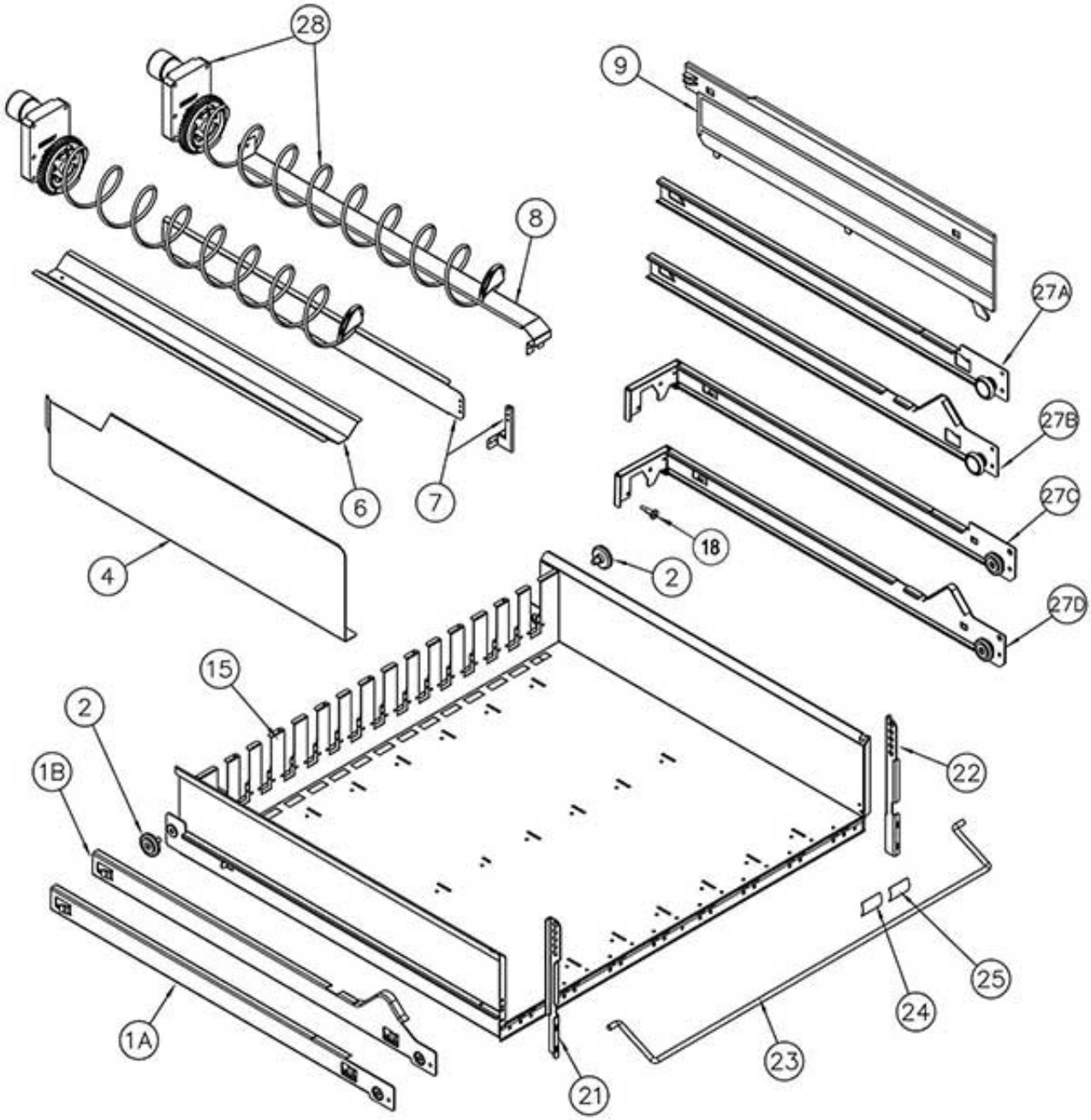

www.rheavendors.com tel: 0039 02 966 551 fax: 0039 02 96 55 086 email: rheavendors@rheavendors.com exclusive property of rheavendors group

Standard Drawer Unit		
Pos.	**Code**	**Description**
1/a	H501300003CL1	LEFT GUIDE + WHEEL
1/b	H501301003CL1	RECLINING LEFT GUIDE + WHEEL
2	H61302015	DRAWER SLIDING WHEEL
4	H601300024-VNA	METAL PRODUCTS SEPARATOR
6	H61300008-VNA	PRODUCT CONVEYOR SPIRAL
7	H61301026-RIC	SPIRAL SEPARATOR COMPLETE
8	H61300017	PRODUCT SUPPORT BRIDGE STAINLE
9	H61301024	PLASTIC PRODUCT SEPARATOR
15/a	H501307023	DRAWER FRAME WITH GUIDES
15/b	H501367023	DRAWER FRAME WITH GUIDES
18	H00040065	SPACER 12,5X8
21	H601300065-VNA	LEFT SUPPORT FOR BOTTLES STOP
22	H601300066-VNA	RIGHT SUPPORT FOR BOTTLES STOP
23	H501300067	MOBILE ROD FOR BOTTLE DROP STOPPER
24	H66320011	POSITIONS SHEET
25	H61320021	SHEET PRICES
27/a	H501300002CL1	RIGHT GUIDE + WHEEL
27/b	H501301002CL1	RECLINING RIGHT GUIDE+INOX WHE
27/c	H501300005CL1	RIGHT GUIDE + WHEEL
27/d	H501301005CL1	RECLINING RIGHT GUIDE + WHEEL
28		See table Spiral unit

www.rheavendors.com tel: 0039 02 966 551 fax: 0039 02 96 55 086 email: rheavendors@rheavendors.com exclusive property of rheavendors group

Spiral unit

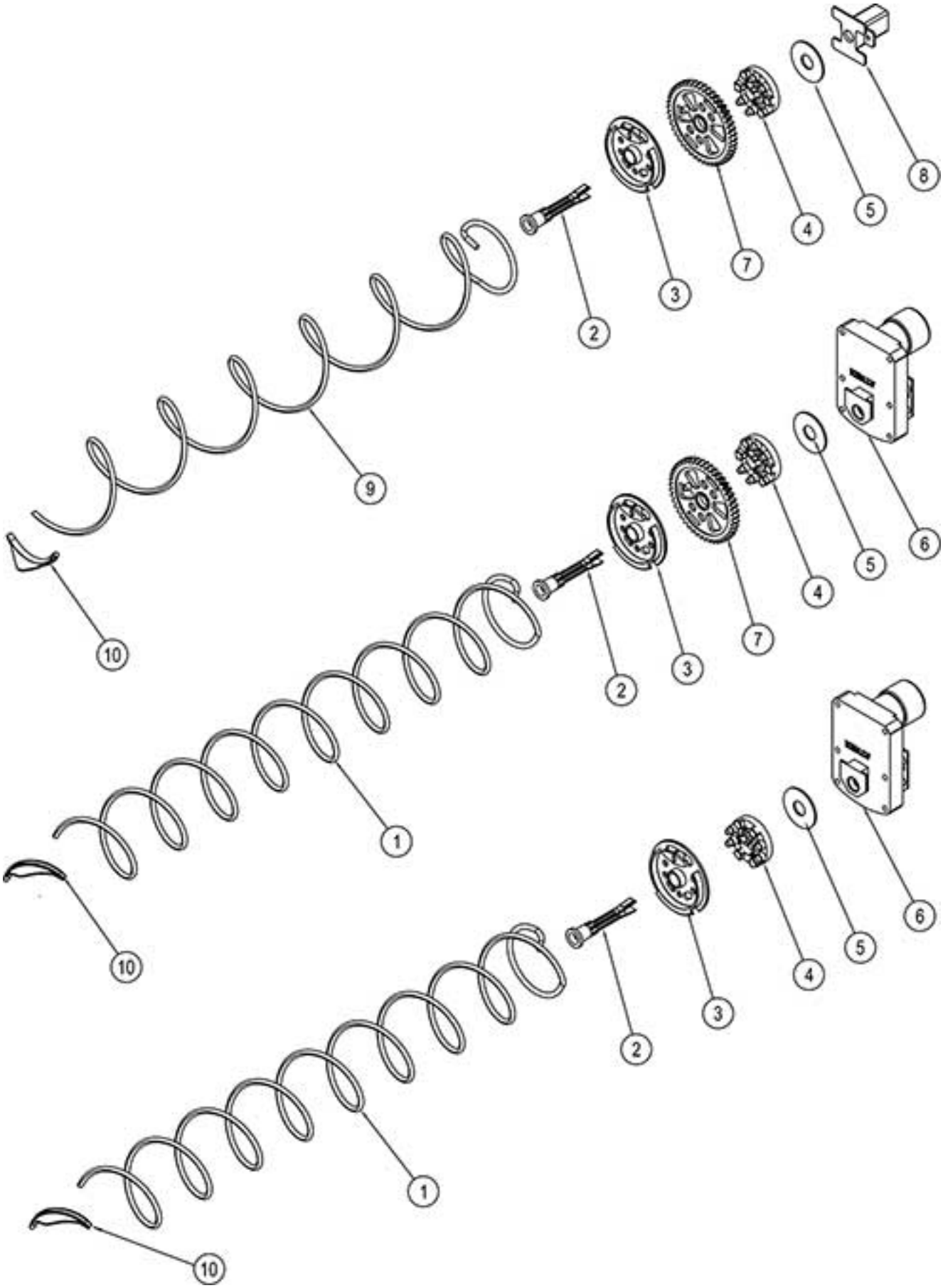

www.rheavendors.com tel: 0039 02 966 551 fax: 0039 02 96 55 086 email: rheavendors@rheavendors.com exclusive property of rheavendors group

Spiral unit		
Pos.	**Code**	**Description**
1/a	H61311024-VNA	RIGHT SPIRAL D65 P24 20 PROD.
1/b	H61311032-VNA	RIGHT SPIRAL D65 P32 15 PROD.
1/c	H61311045-VNA	RIGHT SPIRAL D65 P45 10 PROD.
1/d	H61311060-VNA	RIGHT SPIRAL D65 P60 8 PROD.
1/e	H61311079-VNA	RIGHT SPIRAL D65 P78,5 6 PROD
1/f	H61311091NA	RIGHT SPIRAL D65 P94 5 PROD.
1/g	H61311117NA	RIGHT SPIRAL D65 P117 4 PROD.
1/h	H61311067NA	RIGHT SPIRAL D65 P67 7 PROD.
2	H601300029	SPIRAL MOTOR SHAFT
3	H601300012	SPIRAL ATTACHMENT RING NUT
4	H601300034-01	FRICTION FOR SPIRAL ATTACHMENT
5	VIT0003512	NYLON WASHER 12,7X35X1,5
6	H61302011	GEAR MOTOR 24VDC
7	H601300031	TOOTHED WHEEL FOR SPIRAL
8	H601300032	SUPPORT FOR TOOTHED WHEEL
9/a	H61312024-VNA	LEFT SPIRAL D65 P24 20 PROD.
9/b	H61312032-VNA	LEFT SPIRAL D65 P32 15 PROD.
9/c	H61312045-VNA	LEFT SPIRAL D65 P45 10 PROD.
9/d	H61312060-VNA	LEFT SPIRAL D65 P60 8 PROD.
9/e	H61312079-VNA	LEFT SPIRAL D65 P78,5 6 PROD.
9/f	H61312091NA	LEFT SPIRAL D65 P94 5 PROD.
9/g	H61312117NA	LEFT SPIRAL D65 P117 4 PROD.
10	H60300043	SPIRAL SHOVEL

www.rheavendors.com tel: 0039 02 966 551 fax: 0039 02 96 55 086 email: rheavendors@rheavendors.com exclusive property of rheavendors group