vending machine

spare parts manual

www.rheavendors.com tel: 0039 02 966 551 fax: 0039 02 96 55 086 email: rheavendors@rheavendors.com exclusive property of rheavendors group

Cabinet unit

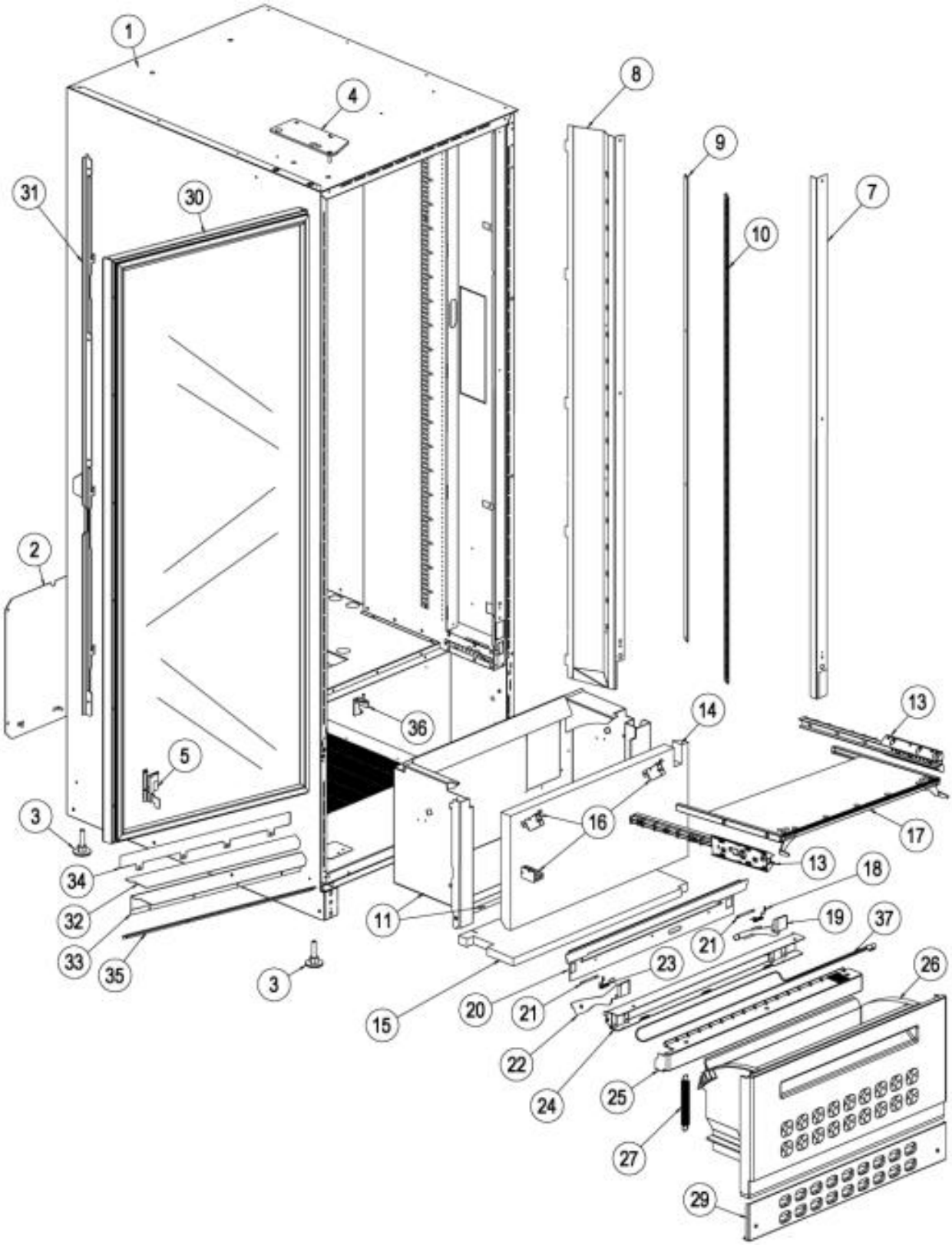

www.rheavendors.com tel: 0039 02 966 551 fax: 0039 02 96 55 086 email: rheavendors@rheavendors.com exclusive property of rheavendors group

Cabinet unit		
Pos.	**Code**	**Description**
1	H501500004	
2	H501500007	REAR GRID
3	H00014001	CABINET FOOD
4	H501500008-V	
5	H501100043	SWITCH BRACKET
7	H501101010-V	
8	H501101022-V	
9	H61103073	GLASS FOR RIGHT LAMP LED COVER
10	H601101041	LEFT LAMP LED COMPLET 3x6 LED
11	H501400047	SHEET METAL L CLOSING FRIDGE
13	H601500042	GUIDE PANEL AND FTCA SUPPORT
14	H501400046	INSULATING FRIDGE CLOSING PANE
15	H501400045	INSULATING FRIDGE CLOSING PANE
16	H00027003	MICROSWITCH CROUZET
16/a	H00027012	MICROSWITCH LEVER
17	H501500130	§ ANTI-THEFT PANEL
18	H501530016	Right spring for EUR7 dispenser unit lever
19	H501530010	
20	H501500057-V	
21	H501530025	Pin ø4 mm for EUR7 dispenser unit lever
22	H501530011	
23	H501530017	Left spring for EUR7 dispenser unit lever
24	H501500058	Central and internal crossbar for levers EUR7
25	H501500059-V	
26/a	H501530009	
26/b	H501530209	
27	H501530019	REAR SPRING FOR DISPENSER UNIT
29	H501500009C	
30	H501101020	DOUBLE GLASS WINDOW + FRAME
31	H505700014-V	
32	H501101015	ADHESIVE PLASTICS FOR GLASS PR
33	H501101012	GLASS WINDOW LOWER PROTECTION
34	H501101016	VERTICAL ADHESIVE PLASTICS FOR
35	H501500069-V	
36	H501500006-V	
37	H501510023	HEATING ELEMENT

www.rheavendors.com tel: 0039 02 966 551 fax: 0039 02 96 55 086 email: rheavendors@rheavendors.com exclusive property of rheavendors group

Lock / keyboard Module

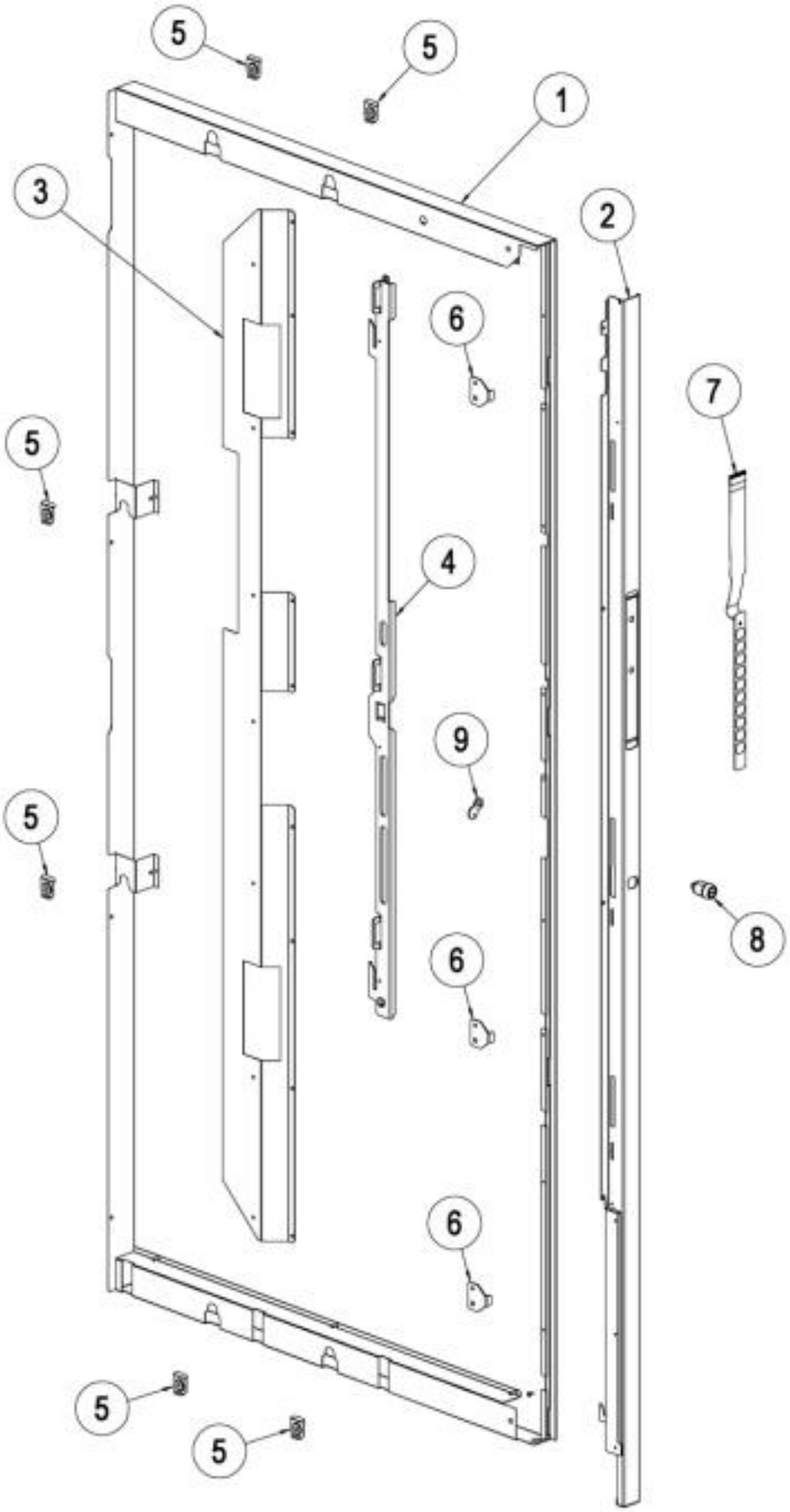

www.rheavendors.com tel: 0039 02 966 551 fax: 0039 02 96 55 086 email: rheavendors@rheavendors.com exclusive property of rheavendors group

Lock / keyboard Module		
Pos.	**Code**	**Description**
1	H505700056-V	
2/a	H505700004-VCM	
2/b	H505700004-VDA	
2/c	Z001D505001NA	FRONTAL DOOR FRAME RAL 9005
2/d	Z001D505001DA	FRONTAL DOOR FRAME RAL 9022
3	H505700057	R.H. FLANCK REINFORCED BRACKET
4	H505700006	
5	H505500063	COUPLE LATERAL MODULE
6	H505560007	HANDLE CARILLON BRACKET
7	H00061059	MEMBRANE KEYPAD (10 BUTTONS)
8A	SER0000023	LOCK RIELDA
8B	H00017074	LOCK
9	H505130007	LOCK SHOE

www.rheavendors.com tel: 0039 02 966 551 fax: 0039 02 96 55 086 email: rheavendors@rheavendors.com exclusive property of rheavendors group

Cooling unit Standard

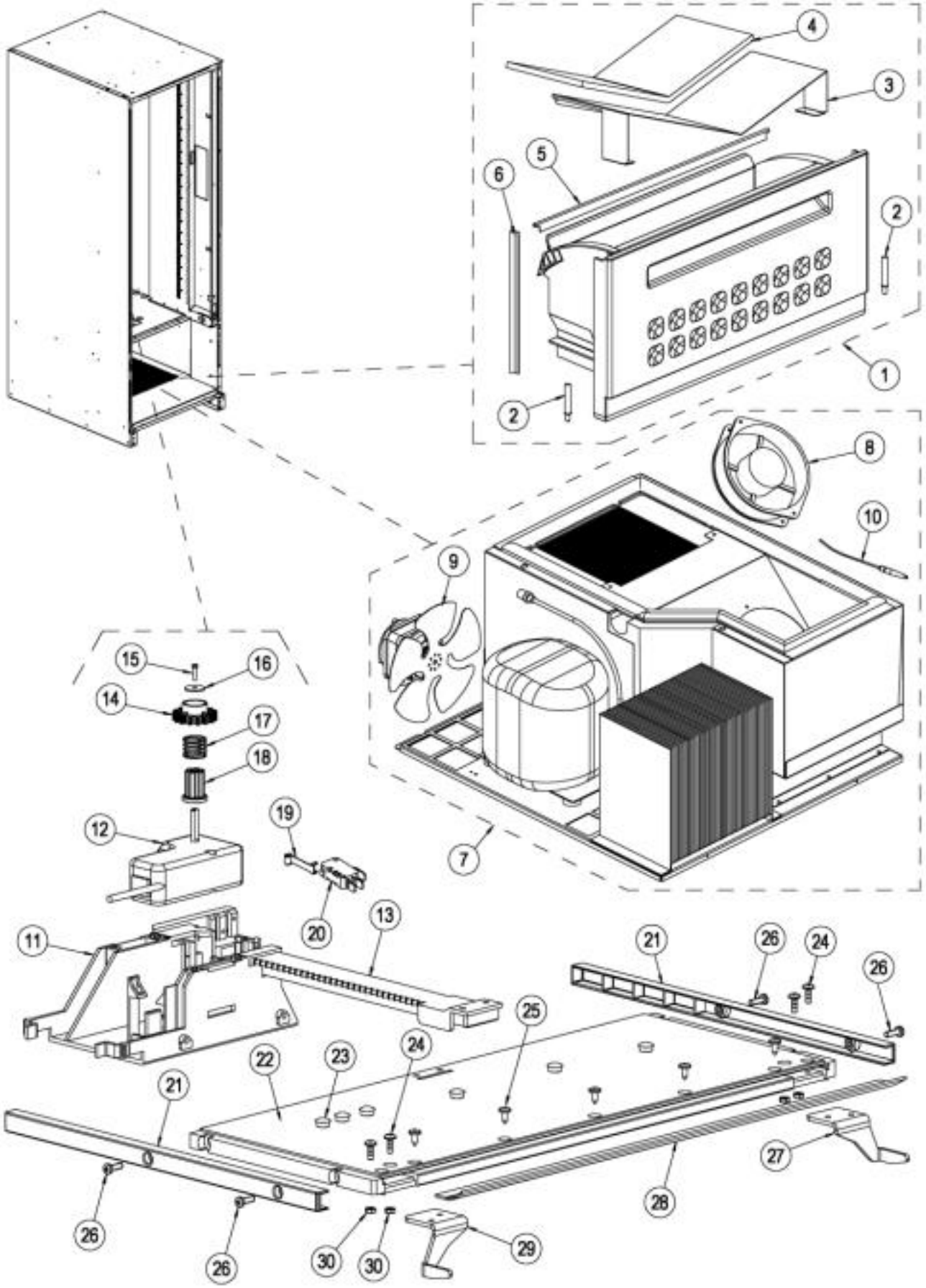

www.rheavendors.com tel: 0039 02 966 551 fax: 0039 02 96 55 086 email: rheavendors@rheavendors.com exclusive property of rheavendors group

Cooling unit Standard		
Pos.	**Code**	**Description**
1	H501530209	
2	601100041	Piston of slowing-down BLM
3	501530037	EUR7 Chute bottles 'M'
4	501530038	Insulator for EUR7 Chute bottles 'M'
5	501530023	Rubber gasket 18 x ø6
6	501530022	Rubber gasket 16 x ø8
7	FRID501004-4E	COOLING UNIT STD 134A 50/60HZ
8/a	ELE0000481	ELECTRONIC FAN 24V DC for GAS R134A
8/b	H501400006-4E	FAN FOR COOLING UNIT for GAS R404A
10	H00069030	PROBE FOR COOLING UNIT
9/a	ELE0000483	FAN FOR COOLING UNIT for GAS R134A
9/b	H501400015-4E	FAN FOR COOLING UNIT for GAS R404A
11	H501500032	ANTI-THEFT MOTOR SUPPORT
12	H601510019	GEAR MOTOR 24VDC 287RPM
13	H501500035	ANTI-THEFT PANEL RACK
14	501500036	EUR7 Anti-theft sliding panel gearwheel
15	VIT0000051	SCREW HEAD TAP CAP M2,5X8
16	501500047	washer 6 x 10 x 1 for gearwheel EUR7
17	501500046	Spring for EUR7 sliding panel gearwheel
18	501500037	Shaft for EUR7 gearwheel
19	ELE0001906	MICROSWITCH LEVER
20	H00027003	MICROSWITCH CROUZET
21	501500034	Skater for EUR7 Anti-thelf sliding panel
22	501500030	EUR7 Anti-thelf sliding panel
23	Z00015076	EUR7 Hole covering cup d. 10
24	Z00034064	TC+ 4 x 10 Screw
25	Z00035002	TC+ 3,9 x 9,5 self-tapping screw
26	Z00035015	TC+ 3,9 x 19 self-tapping screw
27	501500044	Bracket for release right lever EUR7
28	501500039	Rubber gasket 30 x 1,5 mm
29	501500045	Bracket for release left lever EUR7
30	Z00031002	D.4 nut

www.rheavendors.com tel: 0039 02 966 551 fax: 0039 02 96 55 086 email: rheavendors@rheavendors.com exclusive property of rheavendors group

Cooling unit Pro

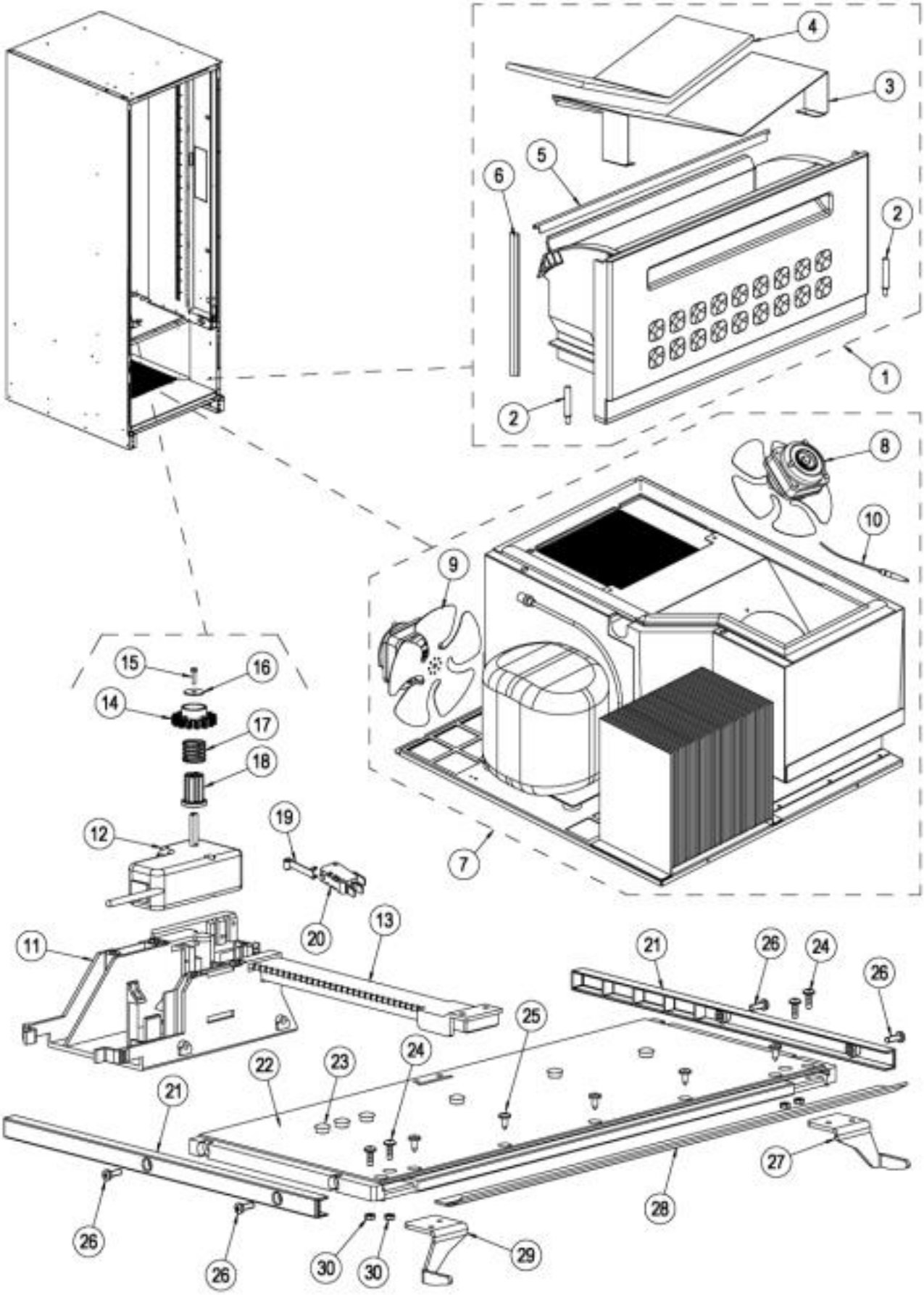

www.rheavendors.com tel: 0039 02 966 551 fax: 0039 02 96 55 086 email: rheavendors@rheavendors.com exclusive property of rheavendors group

Cooling unit Pro		
Pos.	**Code**	**Description**
1/a	H501530209NA	§PRO DISPENSER UNIT PR0 9005
1/b	H501530209DA	§PRO DISPENSER UNIT PR0 9022
2	H601100041	PISTON OF SLOWING-DOWN BLM
3	H501530037	EUR7 Chute bottles 'M'
4	H501530038	Insulator for EUR7 Chute bottles 'M'
5	H501530023	GASKET 18XD.6
6	H501530022	GASKET 16X8
7	FRID501005-4E	COOLING UNIT SUP. 134A 50/60HZ
8/a	ELE0000482	FAN FOR COOLING UNIT for GAS R134A
8/b	H501400017-4E	FAN FOR COOLING UNIT for GAS R404A
9/a	ELE0000484	FAN FOR COOLING UNIT for GAS R134A
9/b	H601400015-4E	FAN FOR COOLING UNIT for GAS R404A
10	H00069030	PROBE FOR COOLING UNIT
11	H501500032	ANTI-THEFT MOTOR SUPPORT
12	H601510019	GEAR MOTOR 24VDC 287RPM
13	H501500035	ANTI-THEFT PANEL RACK
14	H501500036	ANTI-THEFT SLIDING PANEL GEARW
15	VIT0000051	SCREW HEAD TAP CAP M2,5X8
16	H501500047	WASHER 6X10X1
17	H501500046	SPRING FOR SLIDING PANEL GEARW
18	H501500037	SHAFT FOR GEARWHEEL
19	ELE0001906	MICROSWITCH LEVER
20	H00027003	MICROSWITCH CROUZET
21	H501500034	SKATER FOR ANTI-THEFT PANEL
22	H501500030	ANTITHEFT SLIDING PANEL
23	H00015076	HOLE COVERING CUP D. 10
24	H00034064	
25	H00035002	
26	H00035015	
27	H501500044	RIGHT BRACKET
28	H501500039	GASKET 30X1,5
29	H501500045	LEFT BRACKET
30	H00031002	

www.rheavendors.com tel: 0039 02 966 551 fax: 0039 02 96 55 086 email: rheavendors@rheavendors.com exclusive property of rheavendors group

Electrical box

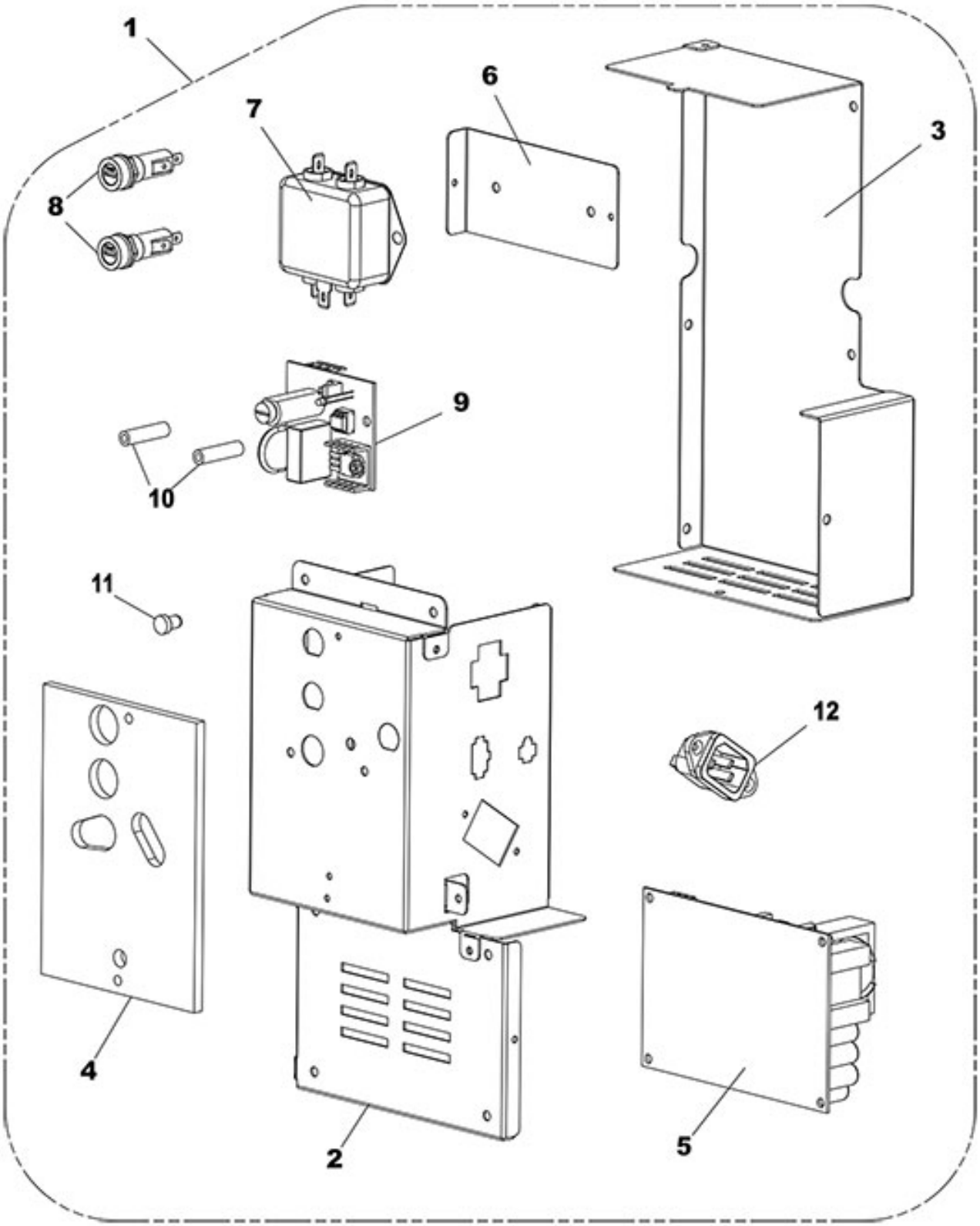

www.rheavendors.com tel: 0039 02 966 551 fax: 0039 02 96 55 086 email: rheavendors@rheavendors.com exclusive property of rheavendors group

Electrical box		
Pos.	**Code**	**Description**
1	H501510050-4E	ELECTRICAL BOX 230V 50/60HZ
2	H505510004	ELECTRICAL PANEL STRUCTURE
3	H505510002	ELECTRICAL PANEL COVER
4	H501510015	ELECTRICOL PANEL ISOLATION
5/a	SCHA161002	SWITCHING BOARD from serial 20214700000
5/b	SCHA161002CL	§SWITCHING BOARD+CABLE Up to serial 20214699999
6	H505510005	ELECTRICAL PANEL FILTER SUPPOR
7	ELE0009065	NOISE FILTER 6A FN2030-6-06
8	H00029006	FUSE HOLDER
9	H00065102-01	TRIACK/FUSE BOARD
10	H00040051	SPACER 8X25
11	Z0020018061	SELECTION BUTTON PLUG
12	H00020071	PANEL PLUG WITH SCREWS

www.rheavendors.com tel: 0039 02 966 551 fax: 0039 02 96 55 086 email: rheavendors@rheavendors.com exclusive property of rheavendors group

Flexspir Drawer Unit

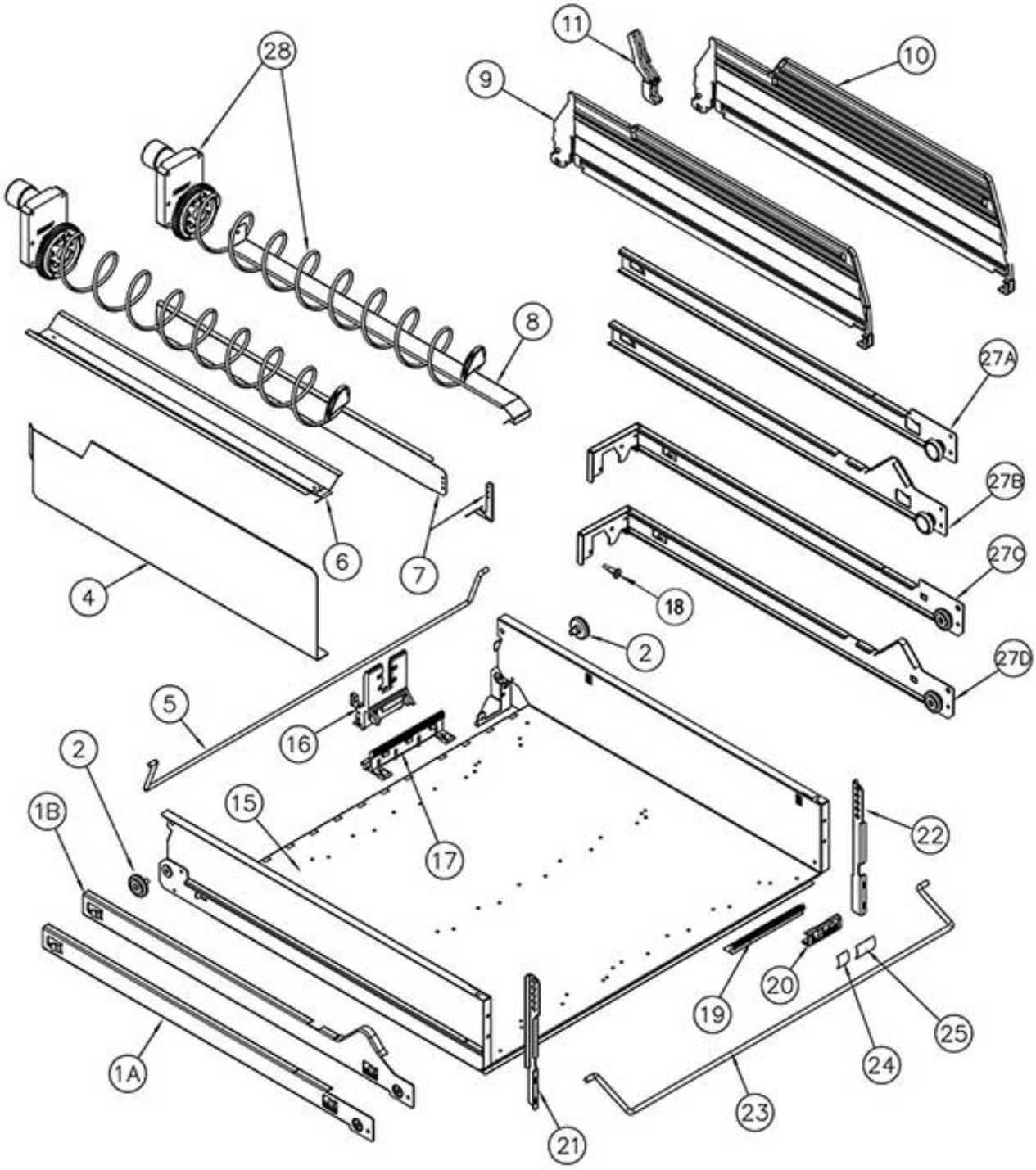

www.rheavendors.com tel: 0039 02 966 551 fax: 0039 02 96 55 086 email: rheavendors@rheavendors.com exclusive property of rheavendors group

Flexspir Drawer Unit		
Pos.	**Code**	**Description**
1A	H501300003CL1	LEFT GUIDE + WHEEL
1B	H501301003CL1	RECLINING LEFT GUIDE + WHEEL
2	H61302015	DRAWER SLIDING WHEEL
4	H601300024-VNA	METAL PRODUCTS SEPARATOR
5	H501300018	SUPPORT CABLE DRAWER ROD
6	H601300008-VNA	PRODUCT CONVEYOR SPIRAL
7	H601301026-RIC	SPIRAL SEPARATOR COMPLETE
8	H601300017	PRODUCT SUPPORT BRIDGE
9	H601301019	PLASTIC PRODUCT SEPARATOR LOW
10	H601301024	PLASTIC PRODUCT SEPARATOR HIGH
11	H601301020	LEVER FOR PLASTIC SEPARATOR
15	H501300013	DRAWER FRAME WITH GUIDES
16	H601300035	SUPPORT SINGLE-MOTOR DRAWER
17	H601300036	SUPPORT FOR DRAWER MOTOR
18	H00040065	SPACER 12,5X8
19	H601300037	SUPPORT FOR PRICE HOLDER
20	H601300016	PRICE HOLDER DRAWER
21	H601300065-VNA	LEFT SUPPORT FOR BOTTLES STOP
22	H601300066-VNA	RIGHT SUPPORT FOR BOTTLES STOP
23	H501300067	MOBILE ROD FOR BOTTLE DROP STOPPER
24	H601320011	SHEET POSITIONS
25	H601320021	SHEET PRICES
27A	H501300002CL1	RIGHT GUIDE + WHEEL
27B	H501301002CL1	RECLINING RIGHT GUIDE+INOX WHE
27C	H501300005CL1	RIGHT GUIDE + WHEEL
27D	H501301005CL1	RECLINING RIGHT GUIDE + WHEEL
28		

www.rheavendors.com tel: 0039 02 966 551 fax: 0039 02 96 55 086 email: rheavendors@rheavendors.com exclusive property of rheavendors group

Standard Drawer Unit

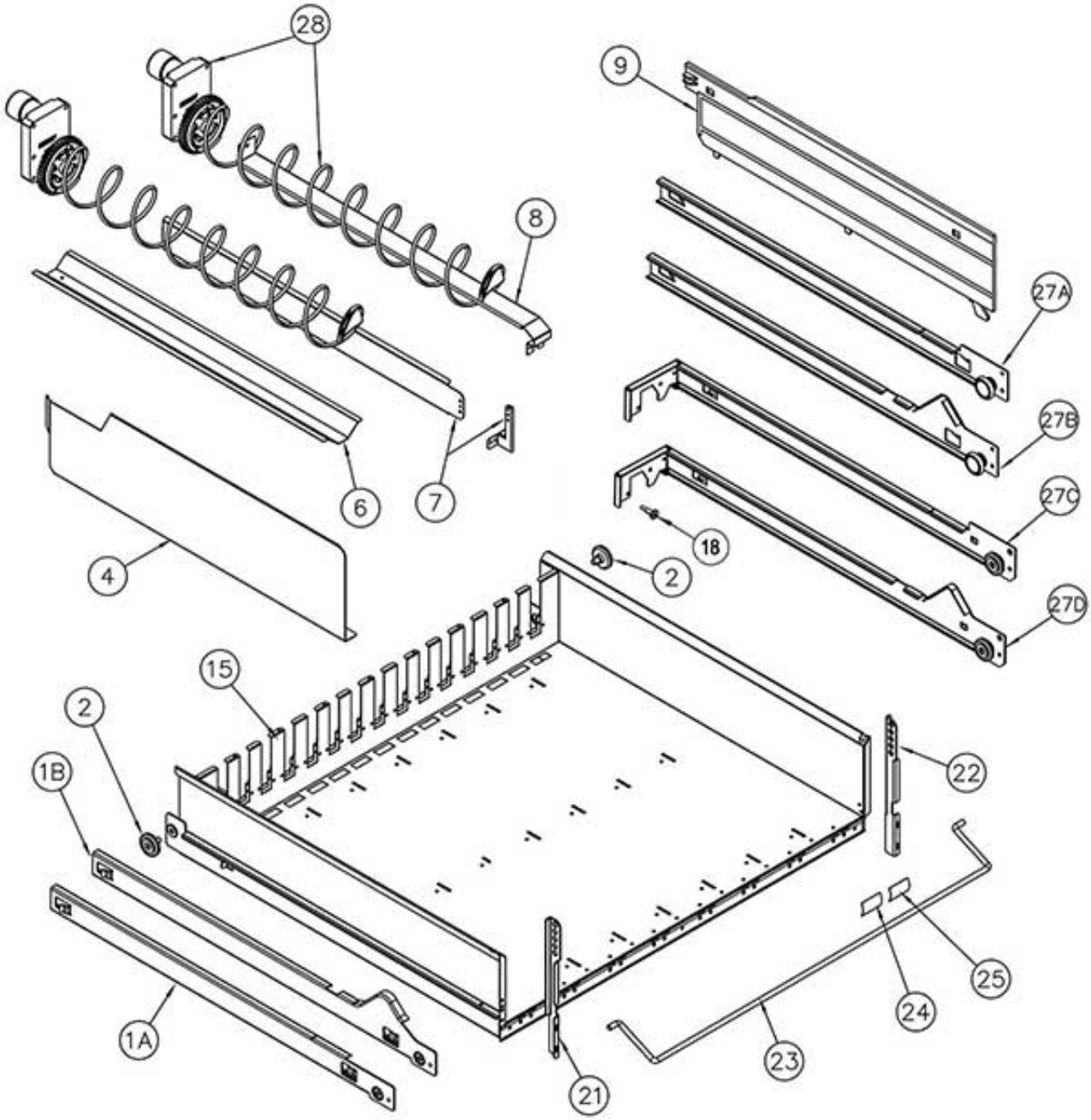

www.rheavendors.com tel: 0039 02 966 551 fax: 0039 02 96 55 086 email: rheavendors@rheavendors.com exclusive property of rheavendors group

Standard Drawer Unit		
Pos.	**Code**	**Description**
1A	H501300003CL1	LEFT GUIDE + WHEEL
1B	H501301003CL1	RECLINING LEFT GUIDE + WHEEL
2	H61302015	DRAWER SLIDING WHEEL
4	H601300024-VNA	METAL PRODUCTS SEPARATOR
6	H61300008-VNA	PRODUCT CONVEYOR SPIRAL
7	H61301026	SPIRAL SEPARATOR COMPLETE
8	H61300017	PRODUCT SUPPORT BRIDGE STAINLE
9	H61301024	PLASTIC PRODUCT SEPARATOR
15A	H501307023	DRAWER FRAME WITH GUIDES
15B	H501367023	DRAWER FRAME WITH GUIDES
18	H00040065	SPACER 12,5X8
21	H601300065-VNA	LEFT SUPPORT FOR BOTTLES STOP
22	H601300066-VNA	RIGHT SUPPORT FOR BOTTLES STOP
23	H501300067	MOBILE ROD FOR BOTTLE DROP STOPPER
24	H66320011	POSITIONS SHEET
25	H61320021	SHEET PRICES
27A	H501300002CL1	RIGHT GUIDE + WHEEL
27B	H501301002CL1	RECLINING RIGHT GUIDE+INOX WHE
27C	H501300005CL1	RIGHT GUIDE + WHEEL
27D	H501301005CL1	RECLINING RIGHT GUIDE + WHEEL
28		

www.rheavendors.com tel: 0039 02 966 551 fax: 0039 02 96 55 086 email: rheavendors@rheavendors.com exclusive property of rheavendors group

Flexspir Spiral Unit

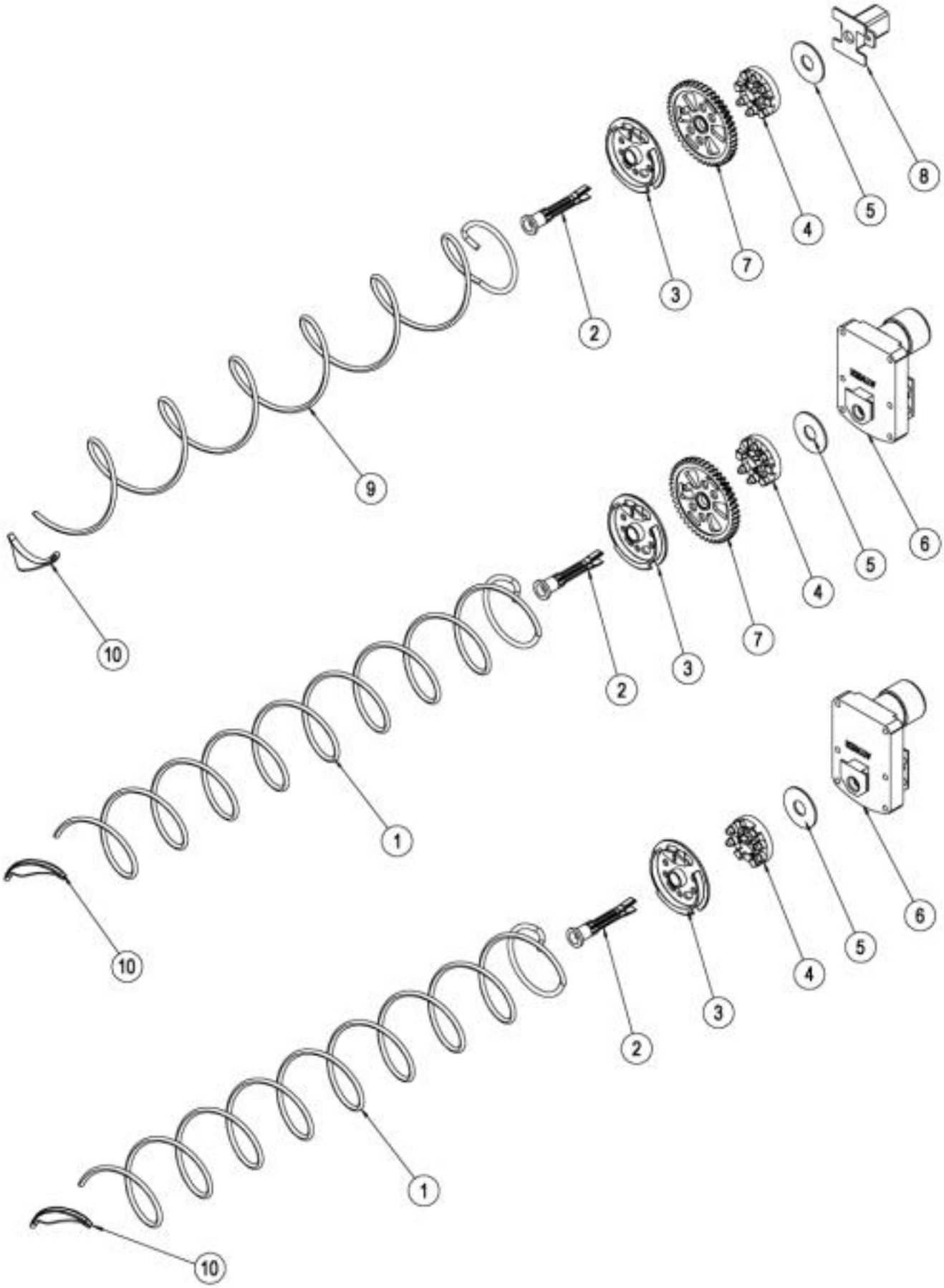

www.rheavendors.com tel: 0039 02 966 551 fax: 0039 02 96 55 086 email: rheavendors@rheavendors.com exclusive property of rheavendors group

Flexspir Spiral Unit		
Pos.	**Code**	**Description**
1A	61311024-V	Right spiral D.65 thread 24 (20 products)
1B	H61311032-VNA	RIGHT SPIRAL D65 P32 15 PROD.
1C	61311045-V	Right spiral D.65 thread 45 (10 products)
1/d	H61311060-VNA	RIGHT SPIRAL D65 P60 8 PROD.
1E	61311079-V	Right spiral D.65 thread 78,5 (6 products)
1/f	H61311091NA	RIGHT SPIRAL D65 P94 5 PROD.
1G	61311117	Right spiral D.65 thread 117 (4 products)
1H	H61311067NA	RIGHT SPIRAL D65 P67 7 PROD.
2	H601300029	SPIRAL MOTOR SHAFT
3	H601300012	SPIRAL ATTACHMENT RING NUT
4	H601300034-01	FRICTION FOR SPIRAL ATTACHMENT
5	VIT0003512	NYLON WASHER 12,7X35X1,5
6	H61302011	GEAR MOTOR 24VDC
7	H601300031	TOOTHED WHEEL FOR SPIRAL
8	601300032	LXS9 Bush for toothed wheel
9A	61312024-V	Left spiral D.65 thread 24 (20 products)
9B	61312032-V	Left spiral D.65 thread 32 (15 products)
9C	61312045-V	Left spiral D.65 thread 45 (10 products)
9D	61312060-V	Left spiral D.65 thread 60 (8 products)
9E	H61312079-VNA	LEFT SPIRAL D65 P78,5 6 PROD.
9F	61312091	Left spiral D.65 thread 94 (5 products)
9G	61312117	Left spiral D.65 thread 117 (4 products)
10	60300043	Small spoon for spiral

www.rheavendors.com tel: 0039 02 966 551 fax: 0039 02 96 55 086 email: rheavendors@rheavendors.com exclusive property of rheavendors group

Electronic cards

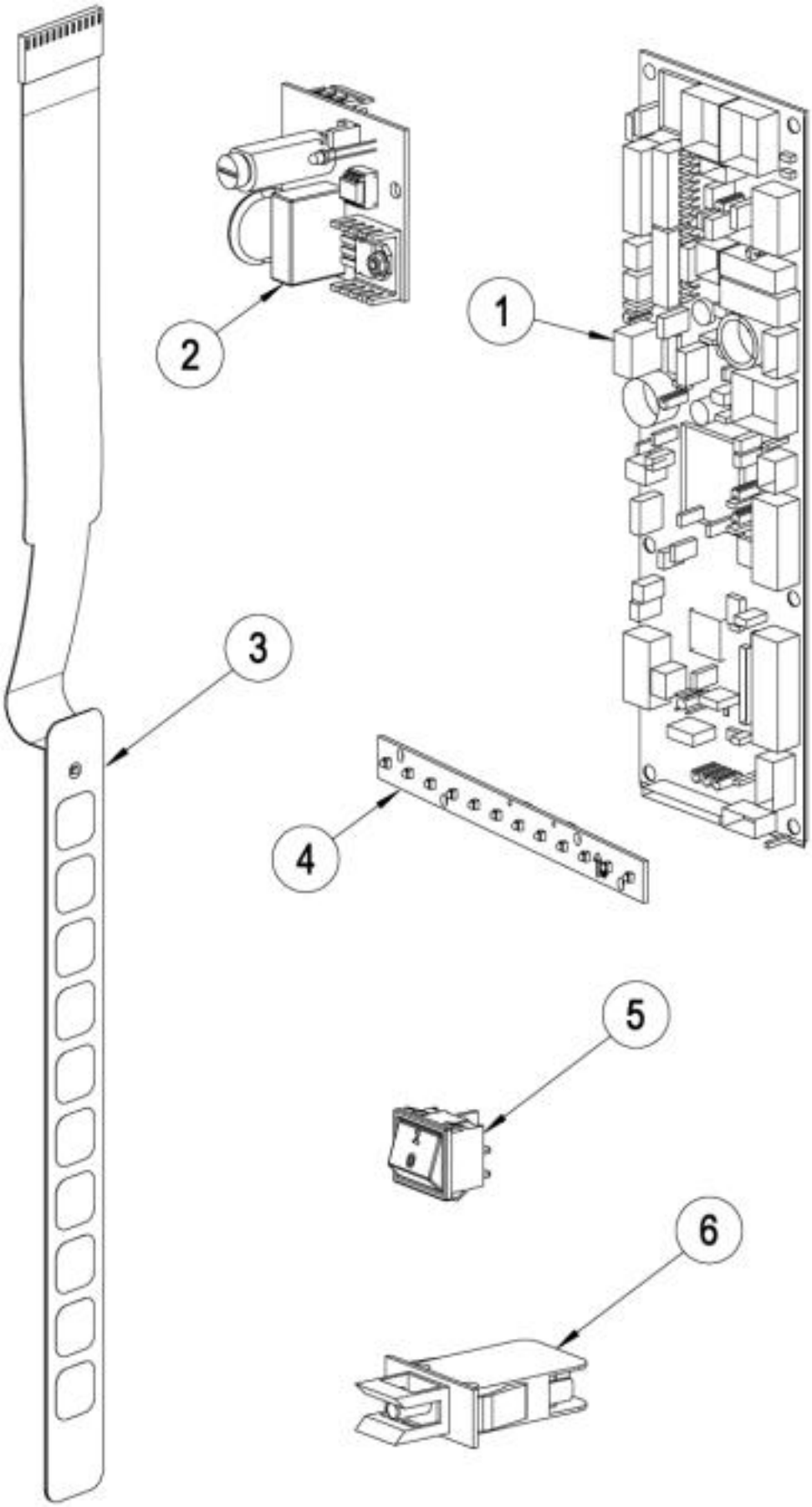

www.rheavendors.com tel: 0039 02 966 551 fax: 0039 02 96 55 086 email: rheavendors@rheavendors.com exclusive property of rheavendors group

Electronic cards		
Pos.	**Code**	**Description**
1	H00120201CL1	BOARD SELV4-CPU SLAVE SIDE
2	H00065102-01	TRIACK/FUSE BOARD
3	Z00061059	Membrane keyboard for EUS7 Slave
4	H00067041	IR FTCA BARRIER BOARD
5	H00027030	ELECTRICAL BOX SWITCH
6	ELE0002009	BIPOLAR SWITCH 15A 250V

www.rheavendors.com tel: 0039 02 966 551 fax: 0039 02 96 55 086 email: rheavendors@rheavendors.com exclusive property of rheavendors group