vending machine

file immagini/ricambi/copertine/piccola.jpg NOT exists!!!!!!

spare parts manual

www.rheavendors.com tel: 0039 02 966 551 fax: 0039 02 96 55 086 email: rheavendors@rheavendors.com exclusive property of rheavendors group

Cabinet unit

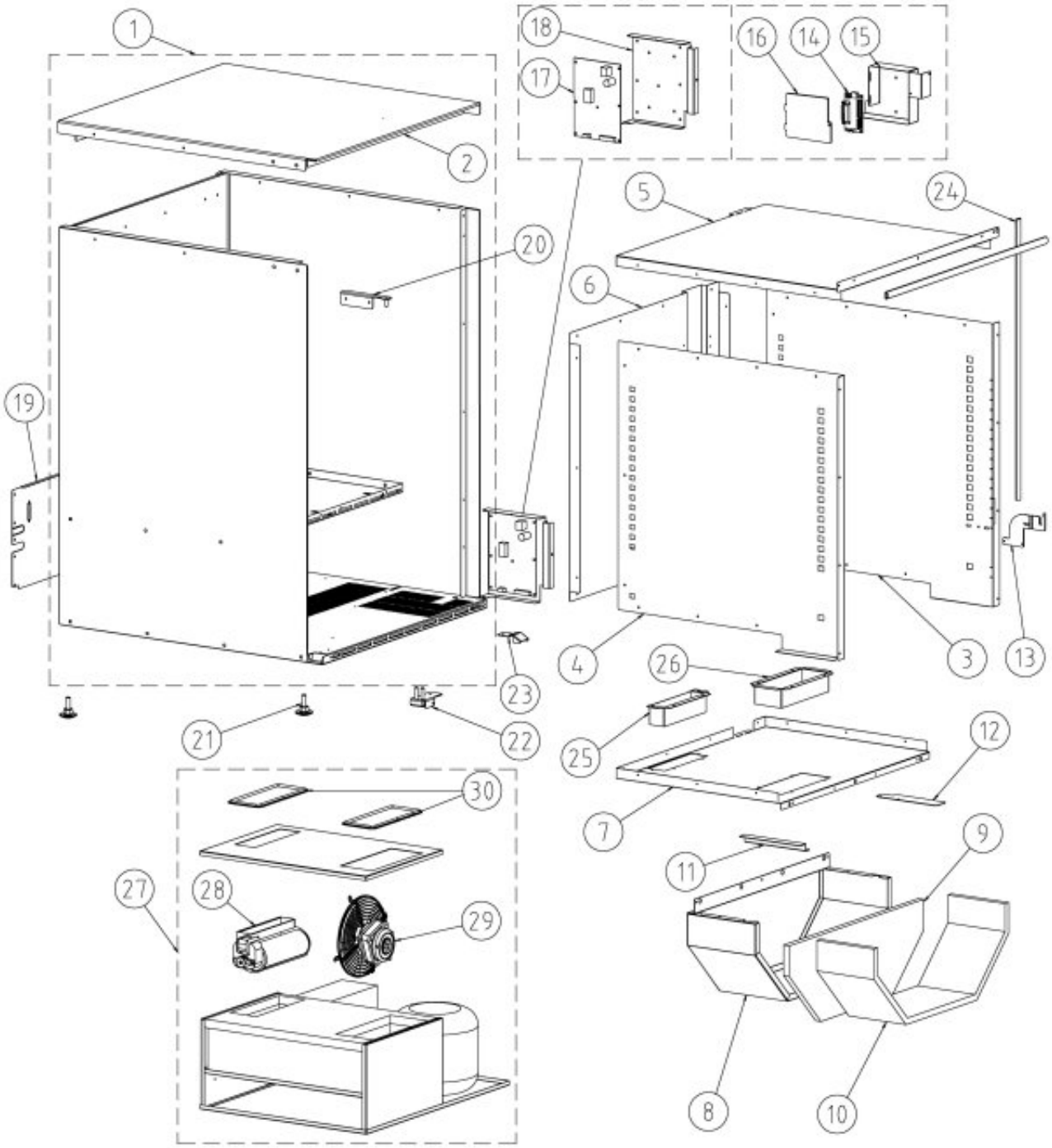

www.rheavendors.com tel: 0039 02 966 551 fax: 0039 02 96 55 086 email: rheavendors@rheavendors.com exclusive property of rheavendors group

Cabinet unit		
Pos.	**Code**	**Description**
1	66500012	EP8 cabinet frame
2	66500052	Drawer roof EP8
3	66550003	EP8 right interior
4	66560004	EP8 left interior
5	66560002	EP8 interior upper
6	66560003	Interior back of EP8 unit
7	66560001	EP8 interior lower
8	66500005	Front panel EP8
9	66500003	Front panel front insulating device EP8
10	66500004	Front panel bottom insulating device EP8
11	66501045	Left cable-holding square EP8
12	66501050	Drawer plastics EP8 right side
13	66130007	Look hook EP8
14	SCH0004900	CONNECTION BOARD
15	66150006	Connector card support EP8 Slave
16	66510007	Card support smoke-grey panel EP8
17	Z00061008	EB/EP8 Master electronic card
18	66150005	EP8 Master CPU card support
19	66500007	Rear EP8 grid
20	66500008	Door upper pintle EP8
21	Z0010013208	MACHINE FOOT
22	66500006	Door lower pintle EP8
23	66130008	Door-guiding shoe EP8
24	61500021	Black cabinet seal per mt
25	66400012	Fridge air delivery union EP8
26	66400011	Fridge air recovery union EP8
27	FRID660001	COOLING UNIT STD GAS 134A
28	H66400004	FAN 180X1
29	H66400015-4E	FAN FOR COOLING UNIT
30	66400013	Fridge gasket EP8

www.rheavendors.com tel: 0039 02 966 551 fax: 0039 02 96 55 086 email: rheavendors@rheavendors.com exclusive property of rheavendors group

Door Unit (Slave)

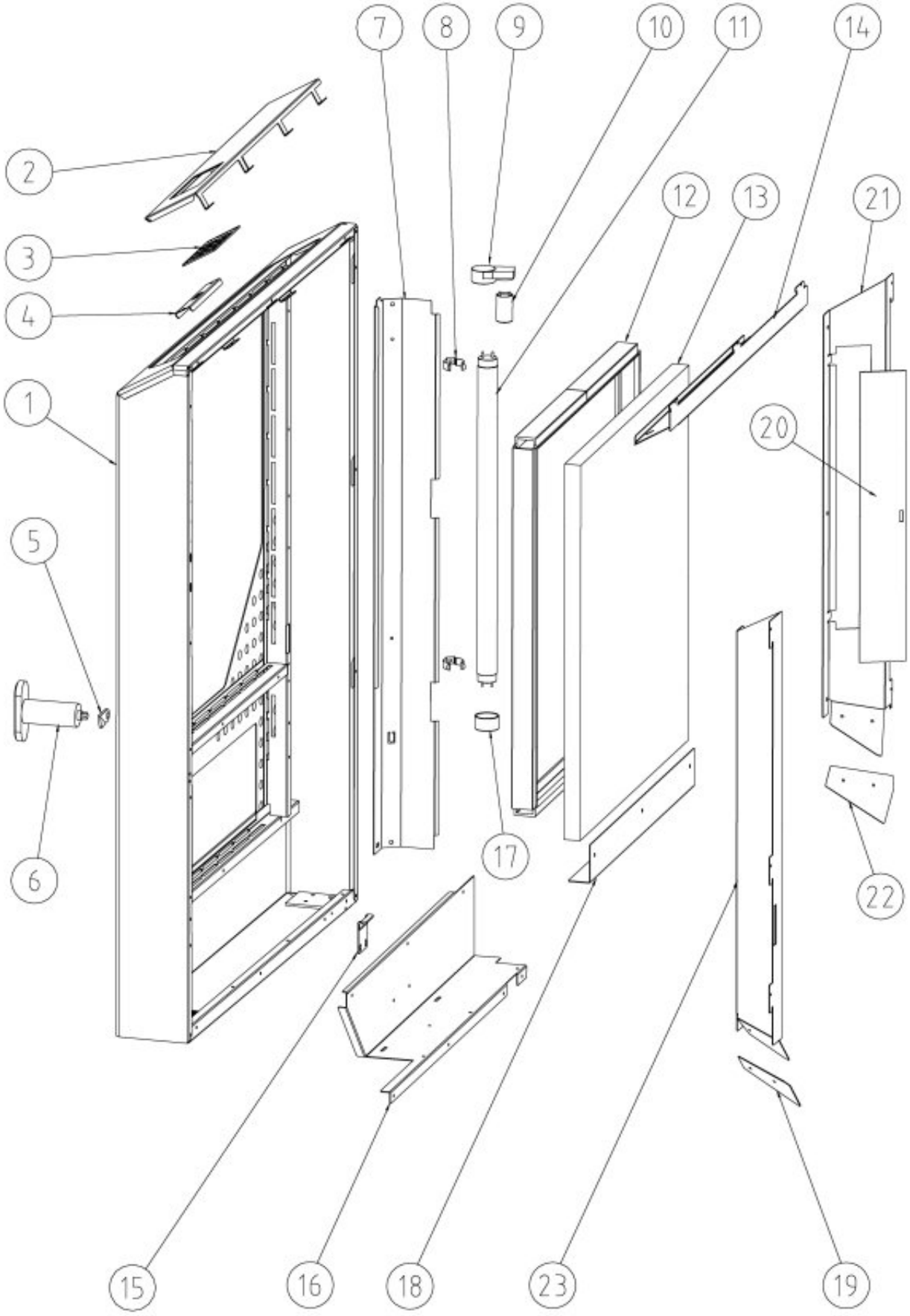

www.rheavendors.com tel: 0039 02 966 551 fax: 0039 02 96 55 086 email: rheavendors@rheavendors.com exclusive property of rheavendors group

Door Unit (Slave)		
Pos.	**Code**	**Description**
1	66100003	EP8 Slave door frame
2	66150009	Control panel EP8 Slave
3	H00061055	MEMBRANE KEYPAD
4	66150021	Keyboard fixing plate EP8
5	66130006	Lock shoe EP8
6	66130002	EP8 door handle
7	66101028	Lamp reflecting sump EP8
8	61511003	Spring clips for EB/EP8/EM8S neon
9	61511002	EB/EP8/EM8S neon starter head
10	Z00028005	Starter for neon
11	66100004	15W neon lamp EP8/EM8S
12	66101008	EP8 glass-window seal
13	66101001	EP8 double glazed glass-window
14	66100041	Door upper cover EP8 Slave
15	66101047	EP8 Safety switch bracket
16	66100027	Door lower cover EP8
17	61511001	Head for EB/EP8/EM8S neon
18	66101005	EP8 horizontal glass stop
19	66101052	Door Dx plastics EP8 Slave
20	61101026	EB/EP8 neon lamp glass cover
21	66101025	EP8 lamp glass cover stop
22	66101050	Neon side plastics chute EP8
23	66101004	Coin box cover EP8 Slave

www.rheavendors.com tel: 0039 02 966 551 fax: 0039 02 96 55 086 email: rheavendors@rheavendors.com exclusive property of rheavendors group

Door Unit (Master)

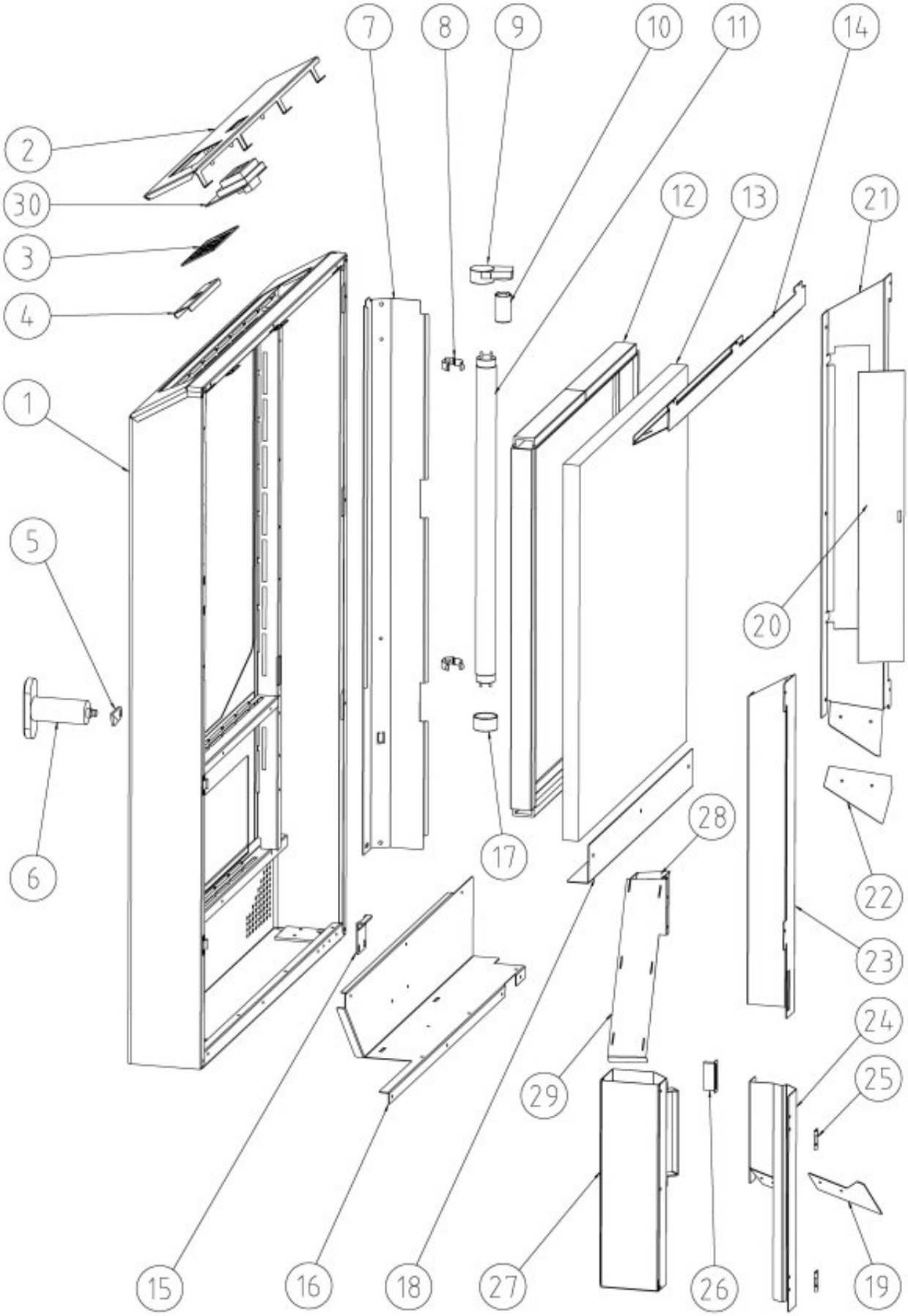

www.rheavendors.com tel: 0039 02 966 551 fax: 0039 02 96 55 086 email: rheavendors@rheavendors.com exclusive property of rheavendors group

Door Unit (Master)		
Pos.	**Code**	**Description**
1	66103003	EP8 Master door frame
2	66150008	Control panel EP8 Master
3	H00061055	MEMBRANE KEYPAD
4	66150021	Keyboard fixing plate EP8
5	66130006	Lock shoe EP8
6	66130002	EP8 door handle
7	66101028	Lamp reflecting sump EP8
8	61511003	Spring clips for EB/EP8/EM8S neon
9	61511002	EB/EP8/EM8S neon starter head
10	Z00028005	Starter for neon
11	66100004	15W neon lamp EP8/EM8S
12	66101008	EP8 glass-window seal
13	66101001	EP8 double glazed glass-window
14	66100040	Upper cover EP8 Master
15	66101047	EP8 Safety switch bracket
16	66100027	Door lower cover EP8
17	61511001	Head for EB/EP8/EM8S neon
18	66101005	EP8 horizontal glass stop
19	66101051	Door Dx plastics EP8 Master
20	61101026	EB/EP8 neon lamp glass cover
21	66101025	EP8 lamp glass cover stop
22	66101050	Neon side plastics chute EP8
23	66101003	Coin box cover EP8 Master
24	66101002	Coin case cover EP8 Master
25	Z00017051	Rolled hinge 25x25
26	Z00017050	Magnetic lock for cover EP8-LXS9
27	66120016	EP8 Master coin box
28	66120041	Coin channel EP8 Master
29	66120040	Coin channel base EP8 Master
30	Z00061012	EB/EP8 display card

www.rheavendors.com tel: 0039 02 966 551 fax: 0039 02 96 55 086 email: rheavendors@rheavendors.com exclusive property of rheavendors group

Dispenser unit

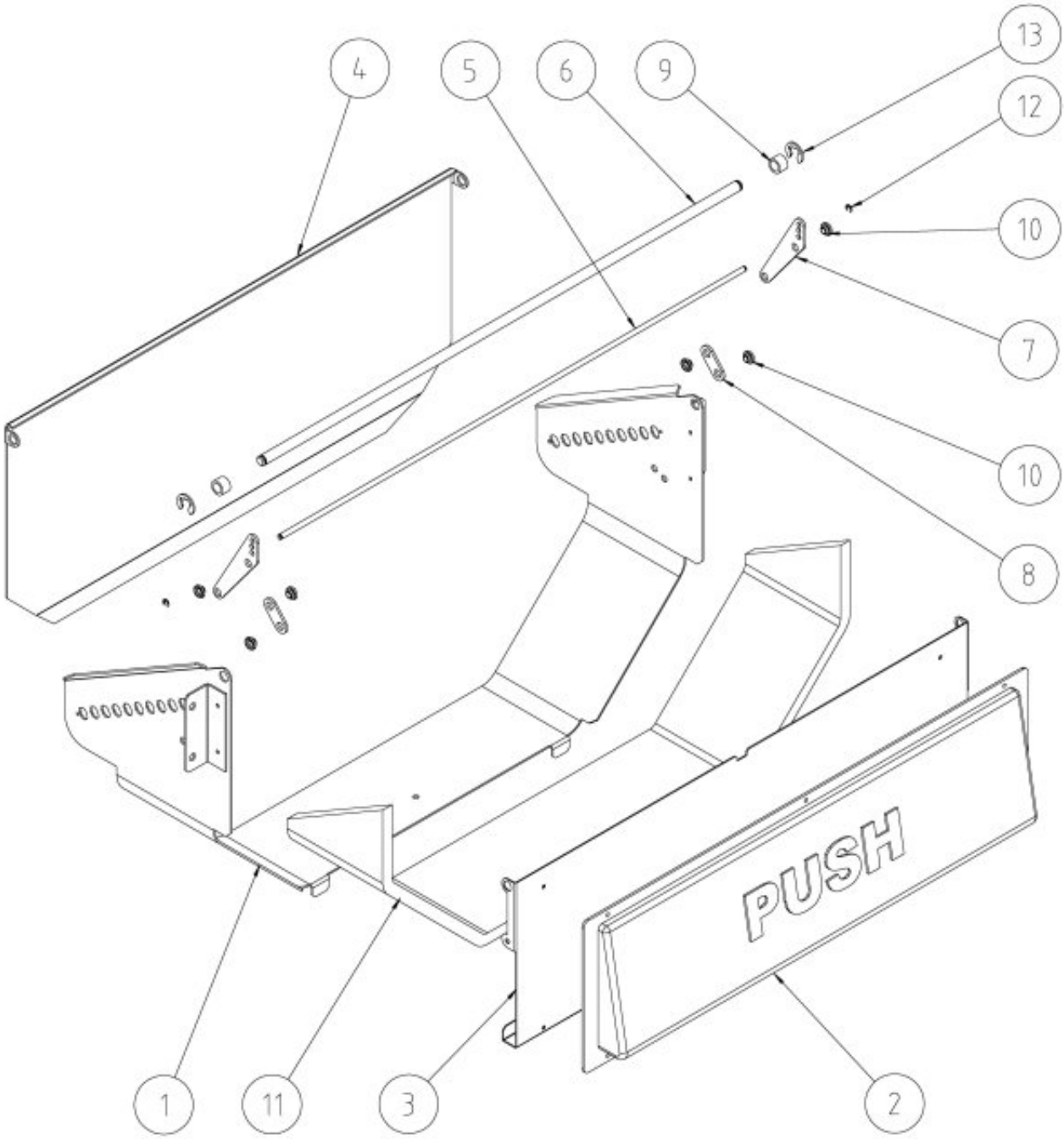

www.rheavendors.com tel: 0039 02 966 551 fax: 0039 02 96 55 086 email: rheavendors@rheavendors.com exclusive property of rheavendors group

Dispenser unit		
Pos.	**Code**	**Description**
1	66103029	EP8 Outlet product support
2	H61103007NA	
3	66100005	EP8 Product extraction door sheet
4	66100012	EP8 anti-thelf panel
5	66100054	Rod for EP8 anti-theft
6	66100035	EP8 front door rot
7	66100034	Antithelf device door lever 1st part
8	66100044	Antithelf device door lever 2nd part
9	61100036	Product door spacer EP8/EB
10	66100008	Door lever spacer EP8
11	61100048	Alluminium insulating device h. 105 mm
12	Z00033001	Radial D. 4
13	Z00033006	Radial D. 8

www.rheavendors.com tel: 0039 02 966 551 fax: 0039 02 96 55 086 email: rheavendors@rheavendors.com exclusive property of rheavendors group

Electrical box

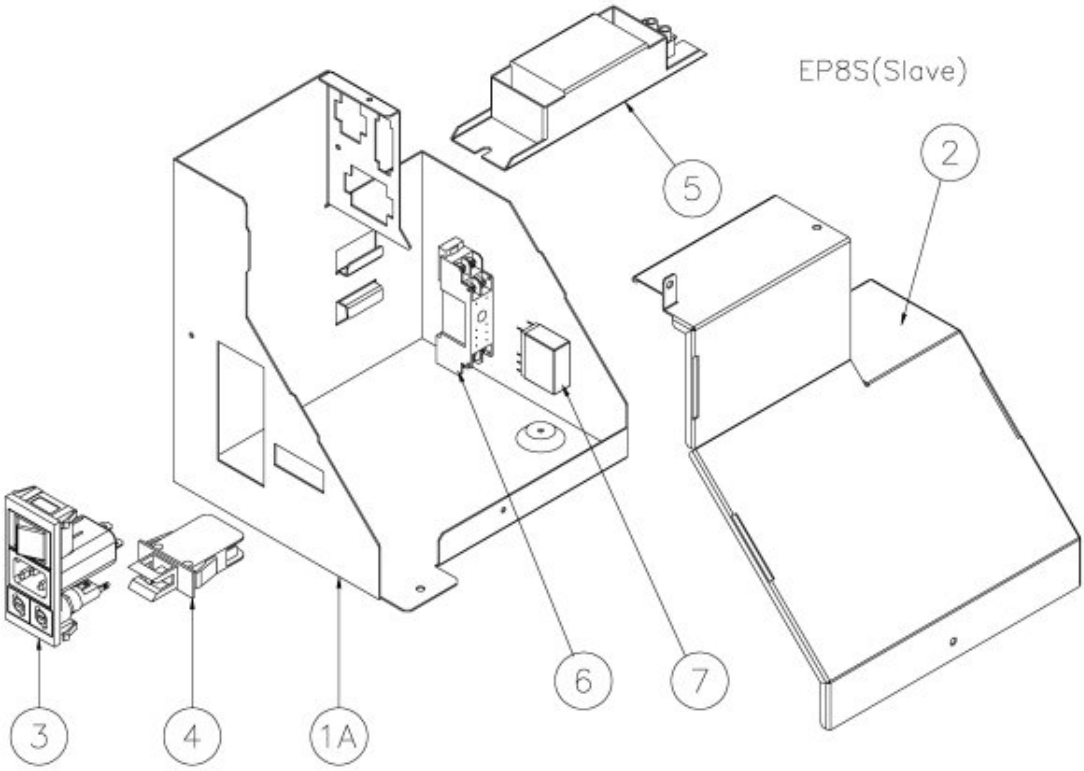

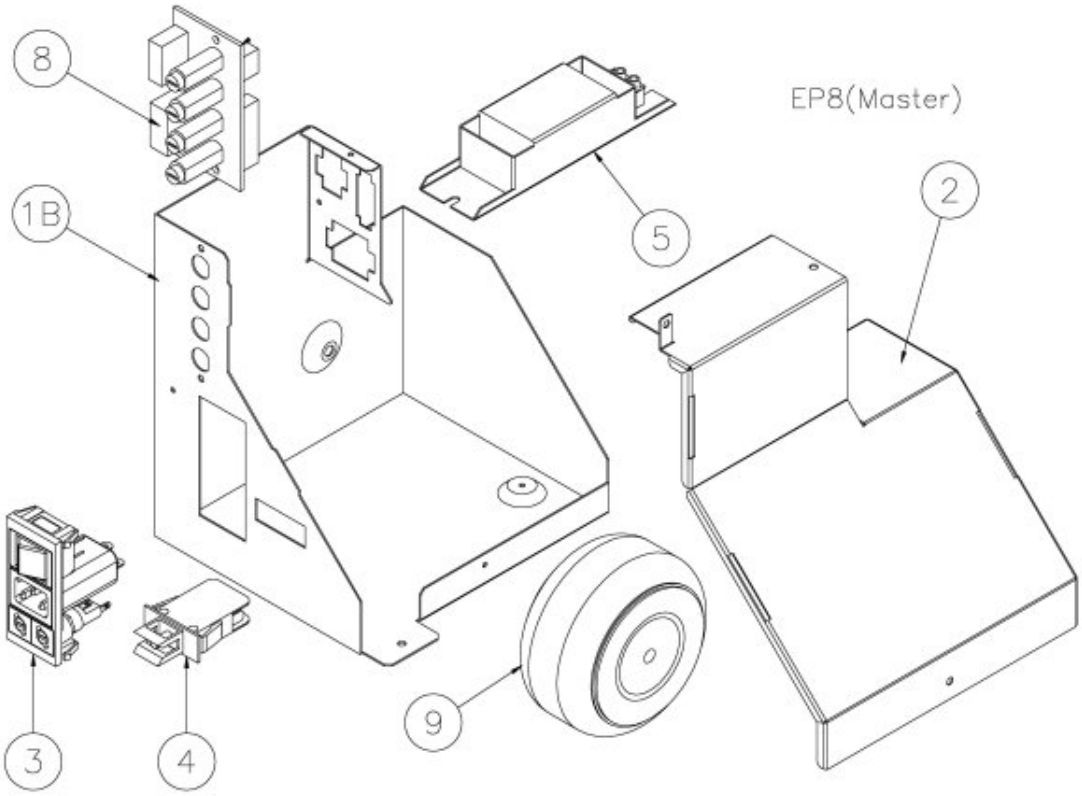

www.rheavendors.com tel: 0039 02 966 551 fax: 0039 02 96 55 086 email: rheavendors@rheavendors.com exclusive property of rheavendors group

Electrical box		
Pos.	**Code**	**Description**
1A	66510005	Electric box frame EP8 Slave
1B	66510004	Electric box frame EP8 Master
2	66510014	Electric box covering EP8
3	66510009	Switch+plug+fuses EP8
4	ELE0002009	BIPOLAR SWITCH 15A 250V
5	66511006	EP8/EM8 lamp reactor 15W
6	H66510055	RELE BASE E61
7	H66510054	RELÈ E61 24VDC 16A
8	Z00065005	Fuse card for EP8 Master
9	61511005	EP8/EB transformer 175 Va

www.rheavendors.com tel: 0039 02 966 551 fax: 0039 02 96 55 086 email: rheavendors@rheavendors.com exclusive property of rheavendors group

Drawer unit

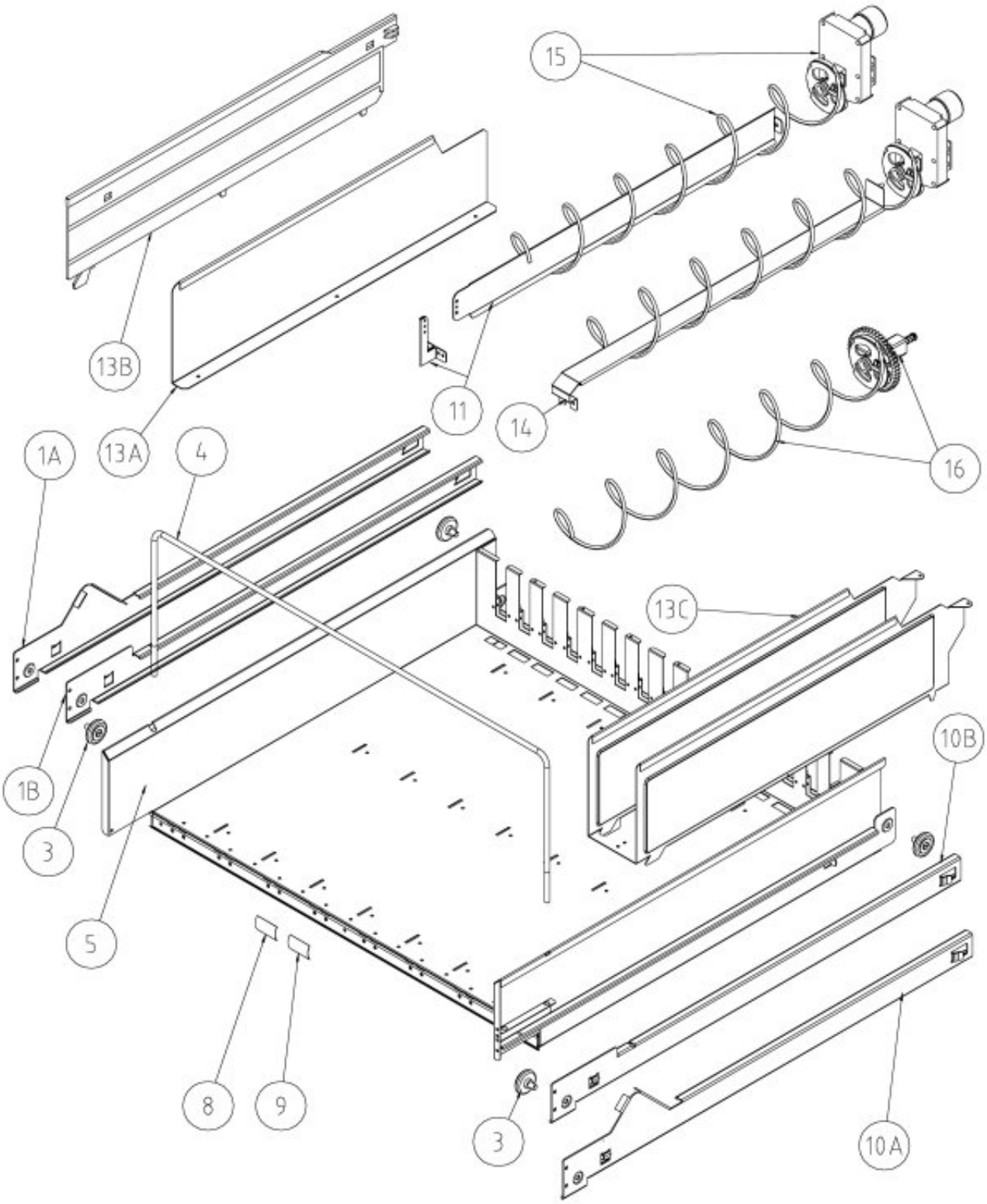

www.rheavendors.com tel: 0039 02 966 551 fax: 0039 02 96 55 086 email: rheavendors@rheavendors.com exclusive property of rheavendors group

Drawer unit		
Pos.	**Code**	**Description**
1A	66301003C	EP8 Drawer reclining left-hand guide
1B	66300003C	EP8 Drawer fixed left-hand guide
3	Z840D601010	STEEL WHEEL FOR DRAWER GUIDE
4	66300028	EP8 upper bottle drop stopper
5	66300010	EP8 painted drawer frame
8	66320011	EP8 position sheet
9	61320021	EB/EP8 price sheet
10A	66301002C	EP8 Drawer reclining right-hand guide
10B	66308002C	EP8 Drawer fixed right-hand guide
11	61301026	Spiral separator
13A	61362024	Metal product separator (6 spirals)
13B	61301024	PLASTIC PRODUCTS SEPARATOR
13C	H61302024-VNA	
14	61300017	Product support bridge stainless steel
15	v t s	See Spiral Unit (Table F1)
16	v t s	See Spiral Unit (Table F1)

www.rheavendors.com tel: 0039 02 966 551 fax: 0039 02 96 55 086 email: rheavendors@rheavendors.com exclusive property of rheavendors group

Spiral unit

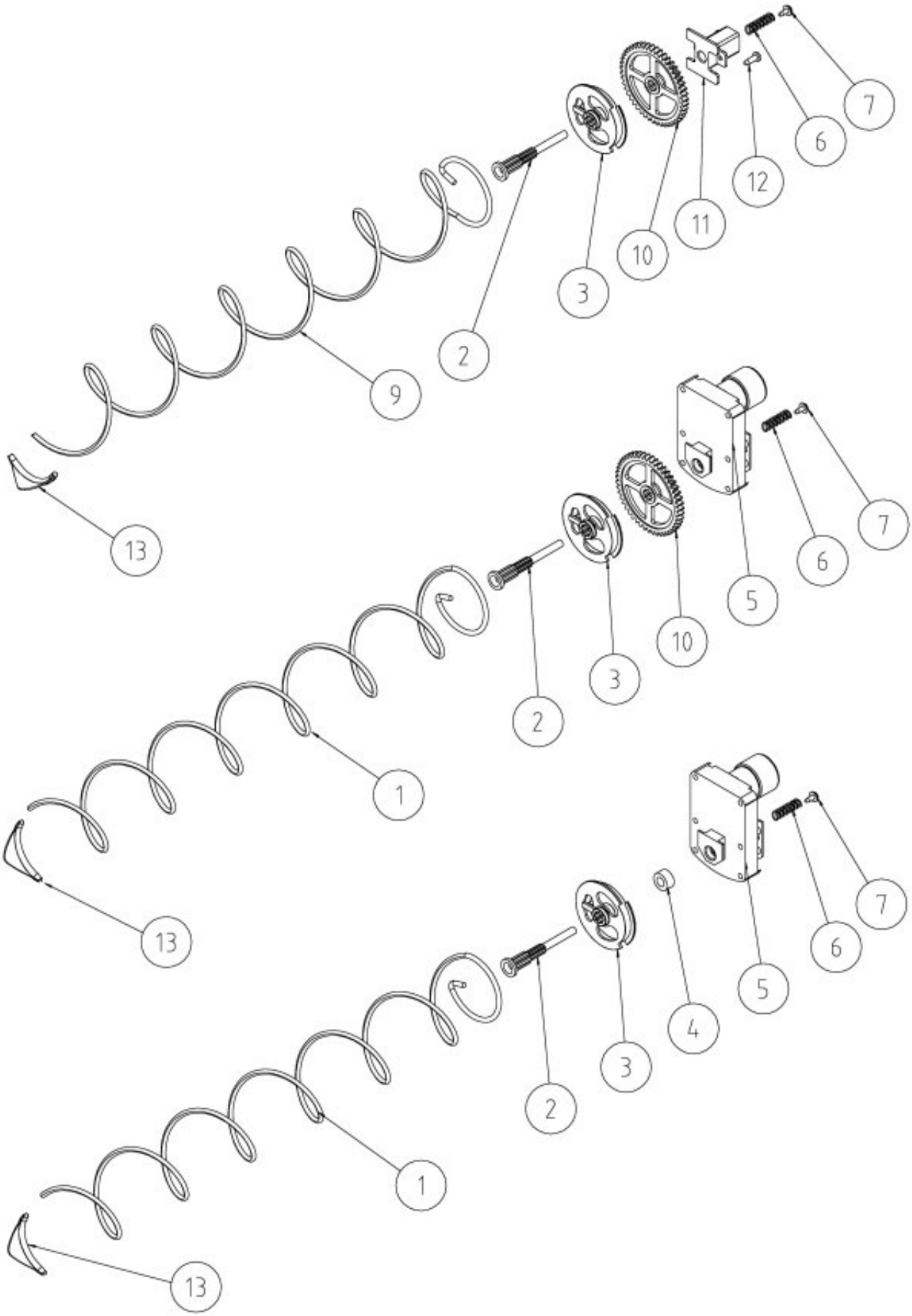

www.rheavendors.com tel: 0039 02 966 551 fax: 0039 02 96 55 086 email: rheavendors@rheavendors.com exclusive property of rheavendors group

Spiral unit		
Pos.	**Code**	**Description**
1A	61311024	Right spiral D.65 thread 24 (20 products)
1B	61311032	RIGHT SPIRAL D.65 - PITCH 32 (15 PRODUCTS)
1C	61311045	Right spiral D.65 thread 45 (10 products)
1D	H61311060-VNA	RIGHT SPIRAL D65 P60 8 PROD.
1F	H61311079-VNA	RIGHT SPIRAL D65 P78,5 6 PROD
1/g	H61311091NA	RIGHT SPIRAL D65 P94 5 PROD.
2	61300029	Spiral motor shaft
3	61300012	Spiral attachment ring nut
4	61300033	Bush for spiral without gears
5	H61301011	GEAR MOTOR 24VDC
6	61300030	Spiral motor shaft spring
7	Z00035025	Self-tapping screw 3.5 x 9,5
9A	61312024	Left spiral D.65 thread 24 (20 products)
9B	61312032	Left spiral D.65 thread 32 (15 products)
9C	61312045	Left spiral D.65 thread 45 (10 products)
9D	H61312060-VNA	LEFT SPIRAL D65 P60 8 PROD.
9F	H61312079-VNA	LEFT SPIRAL D65 P78,5 6 PROD.
10	61300031	Spiral toothed wheel
11	H61300032	BUSH F TOOTHED WHEEL W/O MOTOR
12	Z00035012	Self-tapping screw TC+3,9x6,5 without point
13	60300043	Small spoon for spiral

www.rheavendors.com tel: 0039 02 966 551 fax: 0039 02 96 55 086 email: rheavendors@rheavendors.com exclusive property of rheavendors group

Electronic cards

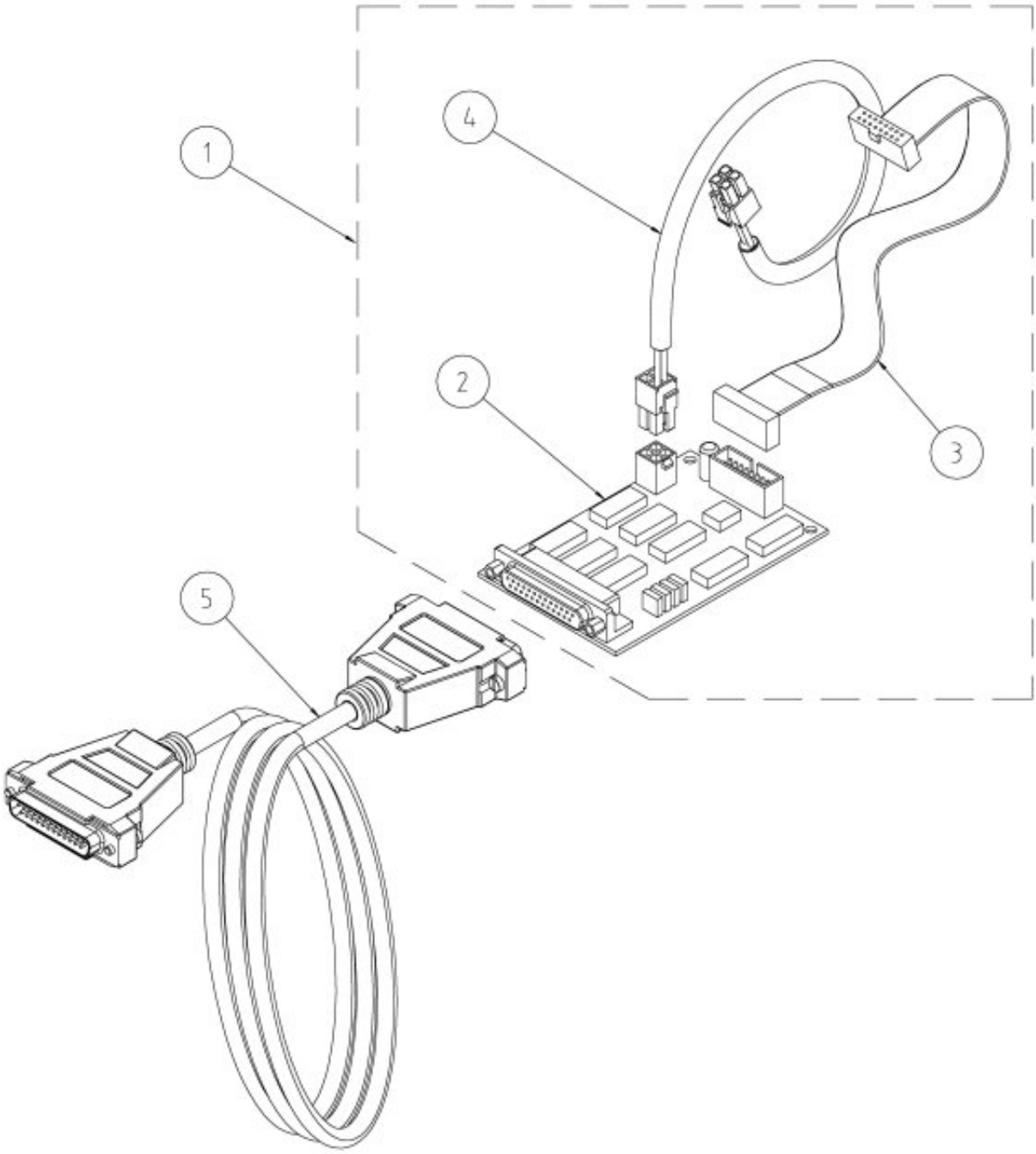

www.rheavendors.com tel: 0039 02 966 551 fax: 0039 02 96 55 086 email: rheavendors@rheavendors.com exclusive property of rheavendors group

Electronic cards		
Pos.	**Code**	**Description**
1	Z00067009	Interface Card Kit EP8 for Rh XL
2	SCH0004360	INTERFACE SNACK BOARD
3	Z00069015	Interface Card flat cable Rh XL for EP8
4	Z00069014	Interface card supply cable Rh XL
5	Z00069011	Connecting cable for EP8 Slave

www.rheavendors.com tel: 0039 02 966 551 fax: 0039 02 96 55 086 email: rheavendors@rheavendors.com exclusive property of rheavendors group