# vending machine

# spare parts manual



www.rheavendors.com tel: 0039 02 966 551 fax: 0039 02 96 55 086 email: rheavendors@rheavendors.com exclusive property of rheavendors group

**cabinet**

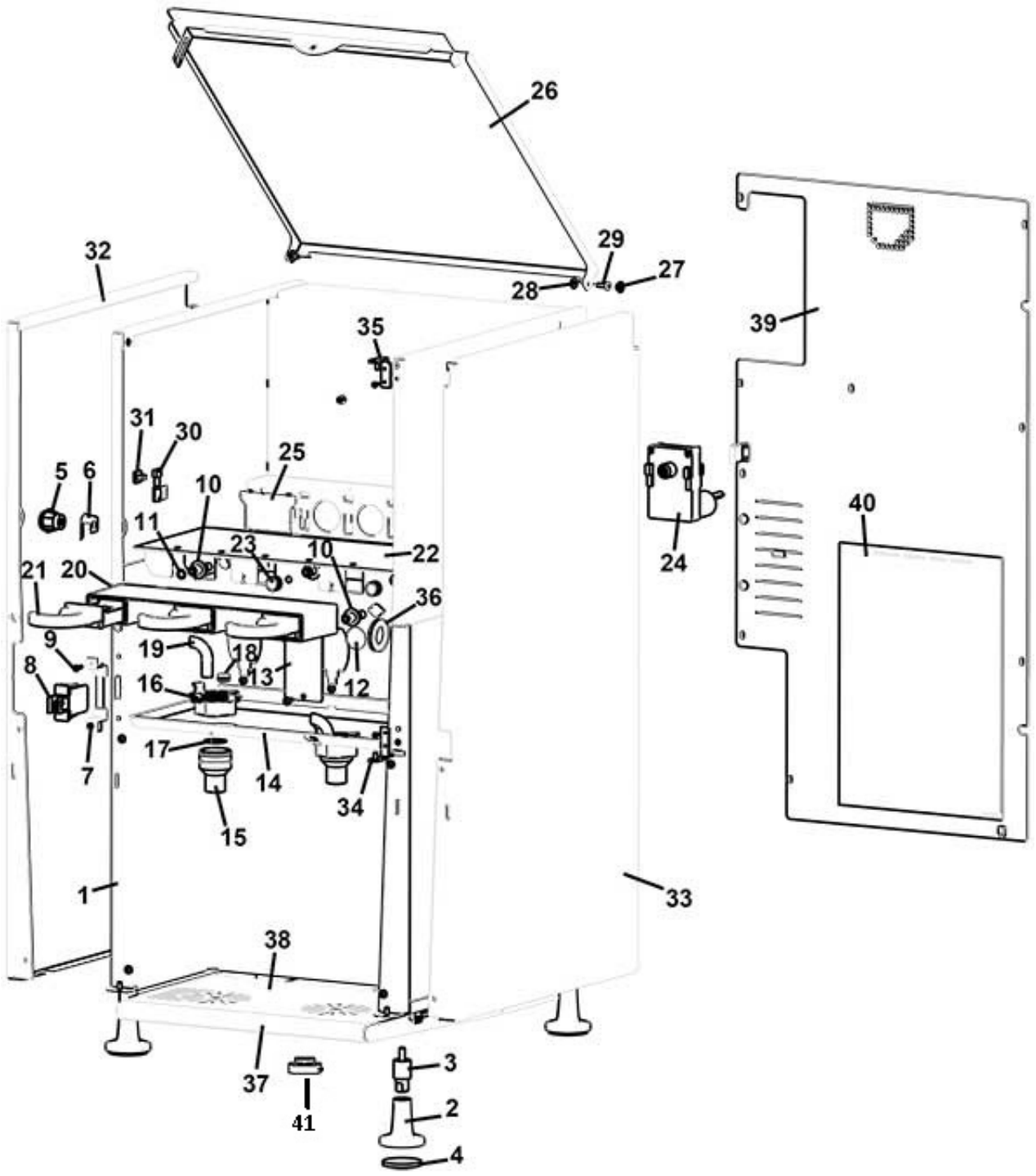




www.rheavendors.com tel: 0039 02 966 551 fax: 0039 02 96 55 086 email: rheavendors@rheavendors.com exclusive property of rheavendors group

| cabinet | | |
|---|---|---|
| **Pos.** | **Code** | **Description** |
| 1 | Z0010021300CL | § CABINET |
| 2 | Z0010027981NA | FEET |
| 3 | Z0010021328 | THREADED SPACER |
| 4 | Z0010024112 | NON-SLIP SURFACE D.43,5X4 |
| 5 | SER0000024 | LOCK MM20 + KEY 3374 |
| 6 | Z0020035615 | LOCK BRACKET |
| 7 | Z0010021305 | SWITCH SUPPORT |
| 8 | ELE0002009 | BIPOLAR SWITCH 15A 250V |
| 9 | VIT0001010 | M 3x12 TCB SCREW |
| 10/a | Z0080100043 | MIXER CONNECTOR BLACK |
| 10/b | Z0080100043-02IC | MIXER CONNECTOR-SHORT ORANGE |
| 10/c | Z0080100043-02MD | MIXER CONNECTOR-SHORT GREEN |
| 10/d | Z0080100043-02PL | MIXER CONNECTOR-SHORT BLUE |
| 11 | GUA0000085 | OR 106 RED SILICONE A70 |
| 12 | Z0080100035NA | CONNECTOR PLUG BLACK |
| 13 | Z0010020028NA | MIXER PLUG BLACK |
| 14 | Z0010021312 | NOZZLES TRAY |
| 15 | Z0010020875NA | MIXER (BLACK) |
| 16 | Z0010020876NA | SUPPORT |
| 17 | GUA0000093 | OR D.23 |
| 18 | GUA0010515 | MEMBRANE CORE HITCH 4 |
| 19 | Z0010020877 | PIPE D.12 |
| 20 | Z0010027036 | TRAP DRAWER |
| 21 | Z0010027022 | TRAP DRAWER REMOVABLE |
| 22 | Z0010021306 | CONTAINER FLAT |
| 23 | VIT0009168 | KNURLED HANDLE |
| 24 | Z0090002113 | MOTOR 24 DC 97 RPM |
| 25 | Z0010020029NA | GEARBOX MOTOR PLUG BLACK |
| 26 | Z0010021310 | UPPER LID |
| 27 | Z0010020754 | PIN |
| 28 | VIT0003301 | WASHER 4,3X12X1,5 |
| 29 | VIT0007033 | BLIND RIVET 4X12 |
| 30 | Z0270011109 | SERVICE KEY |
| 31 | ELE0062253 | WIRING CLAMP ADESIVE |
| 32 | Z0010021307 | L.H. SIDE |
| 33 | Z0010021308 | R.H. SIDE |
| 34 | Z0010021304 | BOTTOM HINGE |
| 35 | Z0010021303 | UPPER HINGE |
| 36 | GUA0010502 | ELECTRICAL GROMMET Ø21 |
| 37 | Z0010021314 | DRIP TRAY |
| 38 | Z0010021313 | DRIP TRAY GRID |
| 39 | Z0010021309R | § REAR DOOR |
| 40 | Z0010020886 | ELECTRIC CONNECTION ADHESIVE LABEL |
| 41 | GUA0010505 | ELECTRICAL GROMMET DG 9 |
| 100 | Z0010027981CL | FEET ASS.Y Pos.2+3+4 |



www.rheavendors.com tel: 0039 02 966 551 fax: 0039 02 96 55 086 email: rheavendors@rheavendors.com exclusive property of rheavendors group

**rear cabinet**

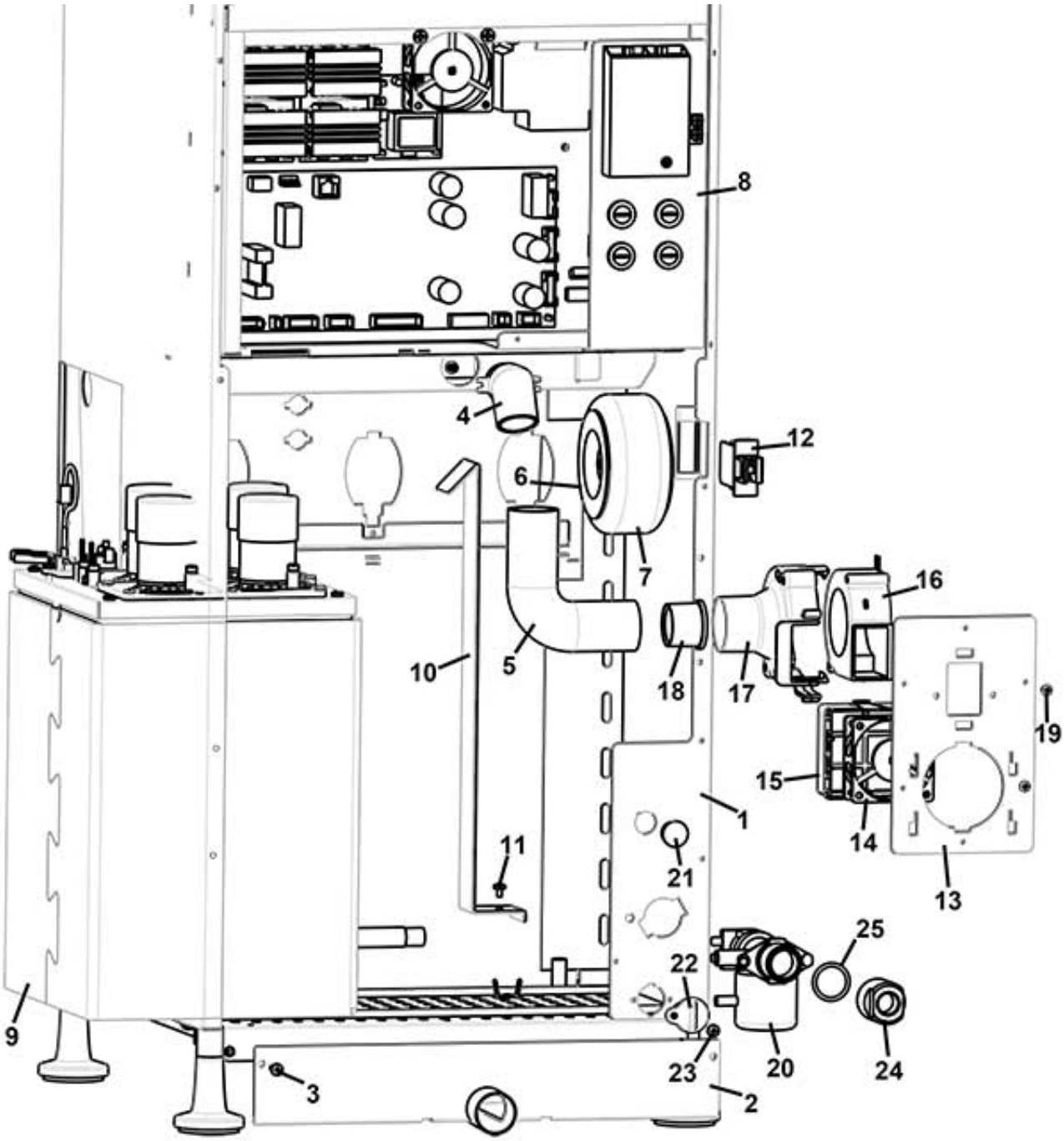




www.rheavendors.com tel: 0039 02 966 551 fax: 0039 02 96 55 086 email: rheavendors@rheavendors.com exclusive property of rheavendors group

| rear cabinet | | |
|---|---|---|
| **Pos.** | **Code** | **Description** |
| 1 | Z0010021300CL | § CABINET |
| 2 | Z0010021322 | WATER OUTLET TUBE |
| 3 | VIT0001005 | SCREW HEAD TAP CAP M4X12 |
| 4 | Z0010027043NA | EXTRACTOR TUBE BLACK |
| 5 | TEOL000002CL2 | EXTRACTOR TUBE D.30 220MM |
| 6 | Z0010027319 | TRANSFORMER DISK |
| 7 | ELE0000584R1 | 150 VA 230V TRANSFORMER W/FIXI |
| 8 | | See table control panel |
| 9 | | See table boiler |
| 10 | Z0010021317 | BOILER BRACKET |
| 11 | VIT0001004 | M 4*6 STAINLESS STEEL TCB SCRE |
| 12 | ELE0002009 | BIPOLAR SWITCH 15A 250V |
| 13 | Z0130013018NA | FAN SUPPORT BLACK |
| 14 | ELE0000462 | FAN 24V DC-LOW SPEED |
| 15 | Z0010027064 | FAN SUPPORT |
| 16 | ELE0000465R | § TRAP 24V DC |
| 17 | Z0010024129NA | TRAP SUPPORT |
| 18 | Z0070020073NA | EXTRACTOR REDUCTION BLACK |
| 19 | VIT0002015 | SCREW ST HEAD CAP M3.5X9.5 |
| 20 | Z0110001110 | INLET WATER VALVE 24V DC |
| 21 | GUA0011010 | PLUG |
| 22 | Z0600016455 | H2O OUTLET PLUG |
| 23 | VIT0001004 | M 4*6 STAINLESS STEEL TCB SCRE |
| 24 | Z0100006001-01 | F/F CYLINDRIC 3/4-3/8 REDUCT. |
| 25 | GUA0000021 | OR 130 NBR AL 75 BLACK |
| 100 | Z0130013018CL | § SUCTION FAN- 3MIXER From pos.13 to pos.18 |



www.rheavendors.com tel: 0039 02 966 551 fax: 0039 02 96 55 086 email: rheavendors@rheavendors.com exclusive property of rheavendors group

**external door**

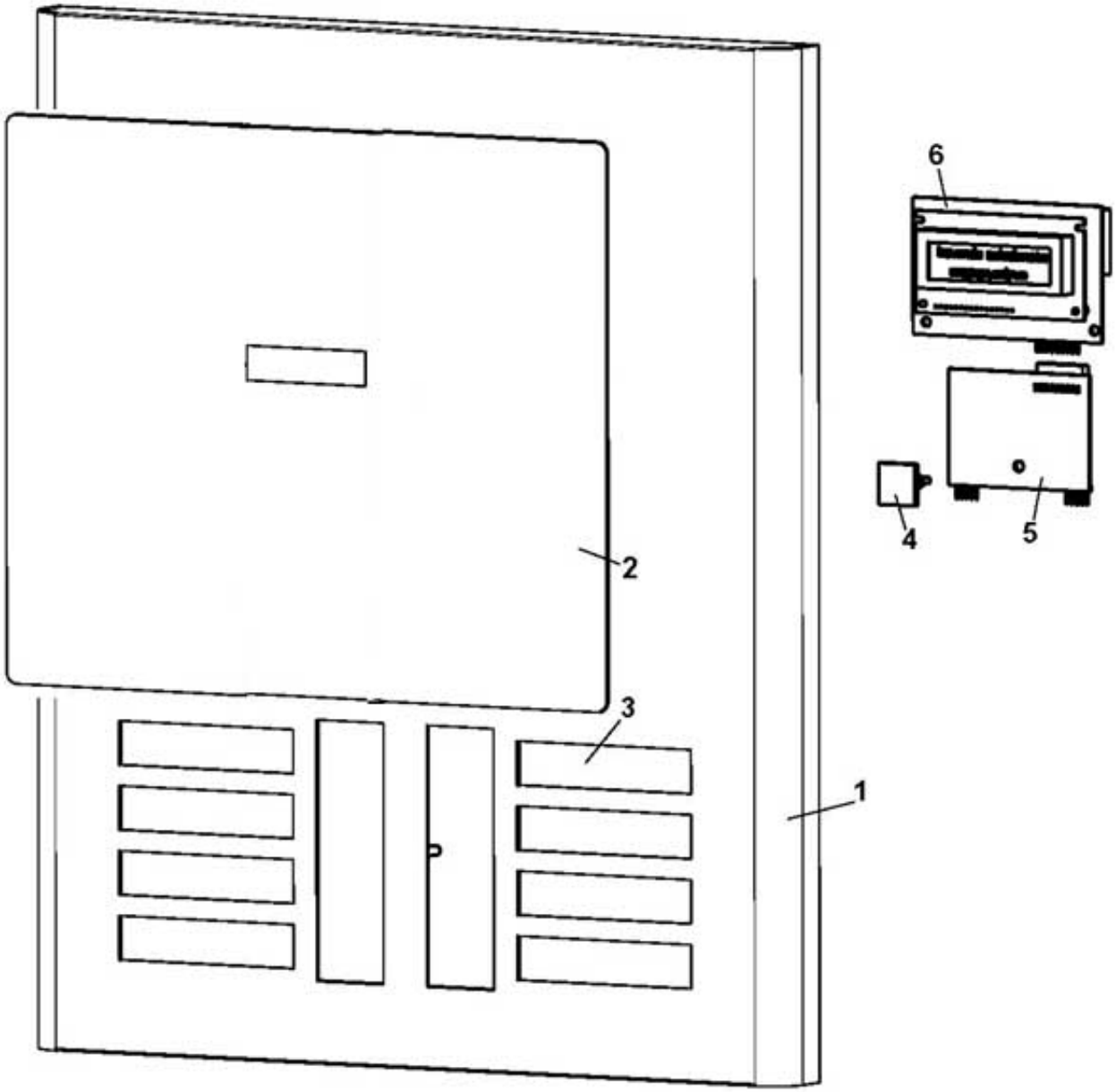




www.rheavendors.com tel: 0039 02 966 551 fax: 0039 02 96 55 086 email: rheavendors@rheavendors.com exclusive property of rheavendors group

| external door | | |
|---|---|---|
| **Pos.** | **Code** | **Description** |
| 1 | Z0020035460 | DOOR |
| 2 | | Please communicate the panel needed |
| 3 | | Please communicate the language and the configuration needed |
| 4 | ELE0062014 | BOARD SPACER ADESIVE |
| 5 | SCH0006640 | INTERFACE KEYPAD BOARD |
| 6 | SCH0009620 | DISPLAY BLUE/WHITE |



www.rheavendors.com tel: 0039 02 966 551 fax: 0039 02 96 55 086 email: rheavendors@rheavendors.com exclusive property of rheavendors group

**internal door**

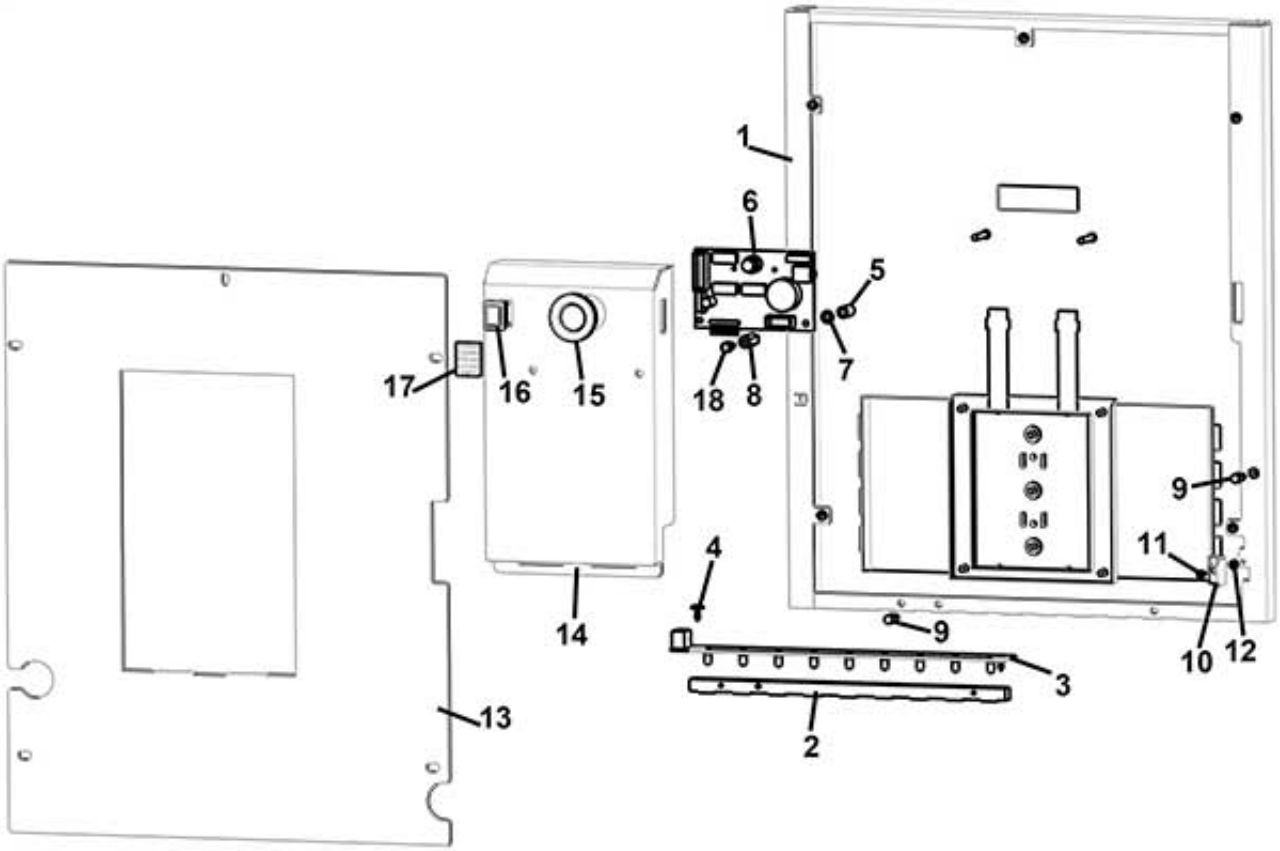




www.rheavendors.com tel: 0039 02 966 551 fax: 0039 02 96 55 086 email: rheavendors@rheavendors.com exclusive property of rheavendors group

| internal door | | |
|---|---|---|
| **Pos.** | **Code** | **Description** |
| 1 | Z0020035460 | DOOR |
| 2 | Z0020035371 | LED GUIDE PLATE |
| 3 | SCH0006580 | 9 LED BOARD |
| 4 | VIT0002401 | SCREW ST HEAD CAP M3.5X9.5 |
| 5 | Z0020035311 | SPACER DISPLAY |
| 6 | SCH0009620 | DISPLAY BLUE/WHITE |
| 7 | VIT0004503 | NUT M4 |
| 8 | Z0020035315 | SPACER DISPLAY COVER |
| 9 | Z0020035329 | DOOR CENTERING PIN |
| 10 | Z0020035464 | DOOR SWITCH LEVER |
| 11 | VIT0000121 | SCREW COUNT FLAT HEAD M3X8 |
| 12 | VIT0004814 | NUT M3 |
| 13 | Z0020035463 | STAINLESS STEEL DOOR COVER |
| 14 | Z0020035461 | STAINLESS STEEL DISPLAY COVER |
| 15 | GUA0010502 | ELECTRICAL GROMMET Ø21 |
| 16 | ELE0002258CL | § PUSH BUTTON RED |
| 17 | 1010065068 | CYCLING LABEL |
| 18 | 4002010055 | PIN |



www.rheavendors.com tel: 0039 02 966 551 fax: 0039 02 96 55 086 email: rheavendors@rheavendors.com exclusive property of rheavendors group

## KEYPAD

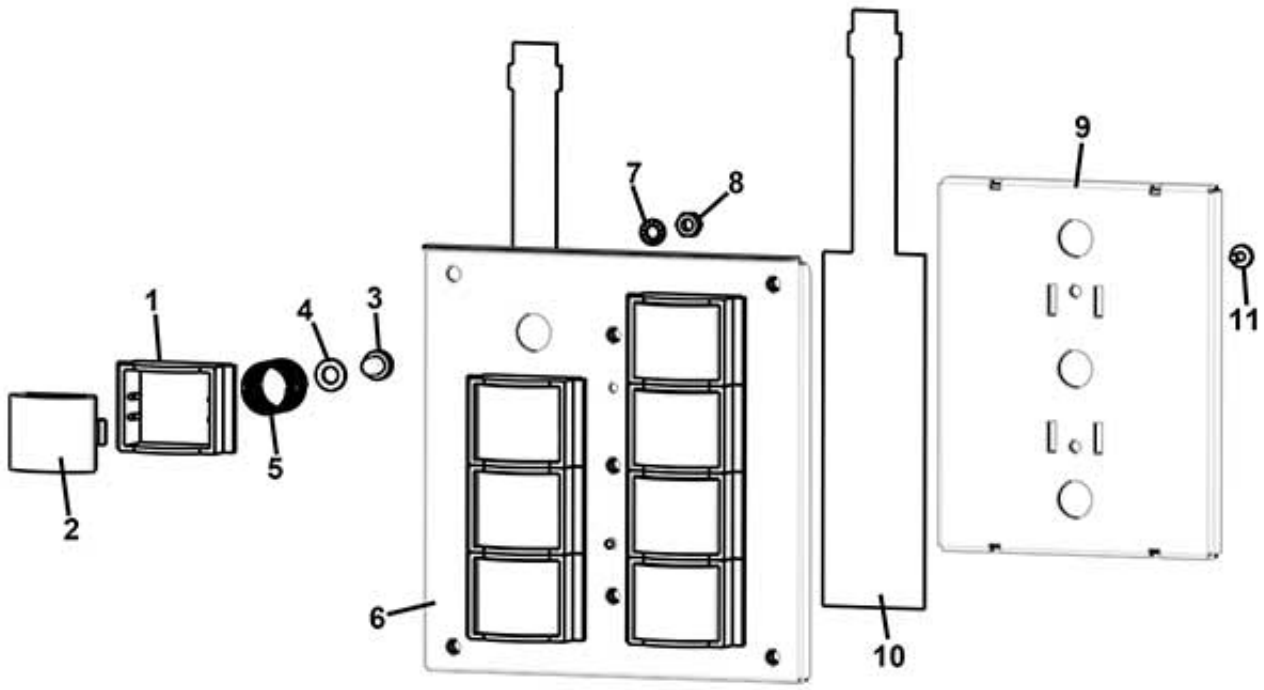




www.rheavendors.com tel: 0039 02 966 551 fax: 0039 02 96 55 086 email: rheavendors@rheavendors.com exclusive property of rheavendors group

| KEYPAD | | |
|---|---|---|
| **Pos.** | **Code** | **Description** |
| 1 | Z0140014016CM | SELECTION BUT. HOLDER RAL9006 |
| 2 | Z0140014103XC | SELECTION BUTTON CHROMO |
| 3 | Z0020018061 | SELECTION BUTTON PLUG |
| 4 | VIT0003004 | WASHER 5,3X10X1 |
| 5 | Z0020018077 | COIN RETURN SPRING |
| 6 | Z0020035421 | BUTTON SUPPORT |
| 7 | VIT0003103 | SPRING WASHER 4,3 |
| 8 | VIT0004503 | NUT M4 |
| 9 | Z0020035423 | KEYPAD SUPPORT |
| 10 | Z0020026209 | KEYPAD 4 BUTTON |
| 11 | VIT0002015 | SCREW ST HEAD CAP M3.5X9.5 |



www.rheavendors.com tel: 0039 02 966 551 fax: 0039 02 96 55 086 email: rheavendors@rheavendors.com exclusive property of rheavendors group

**cups stop**

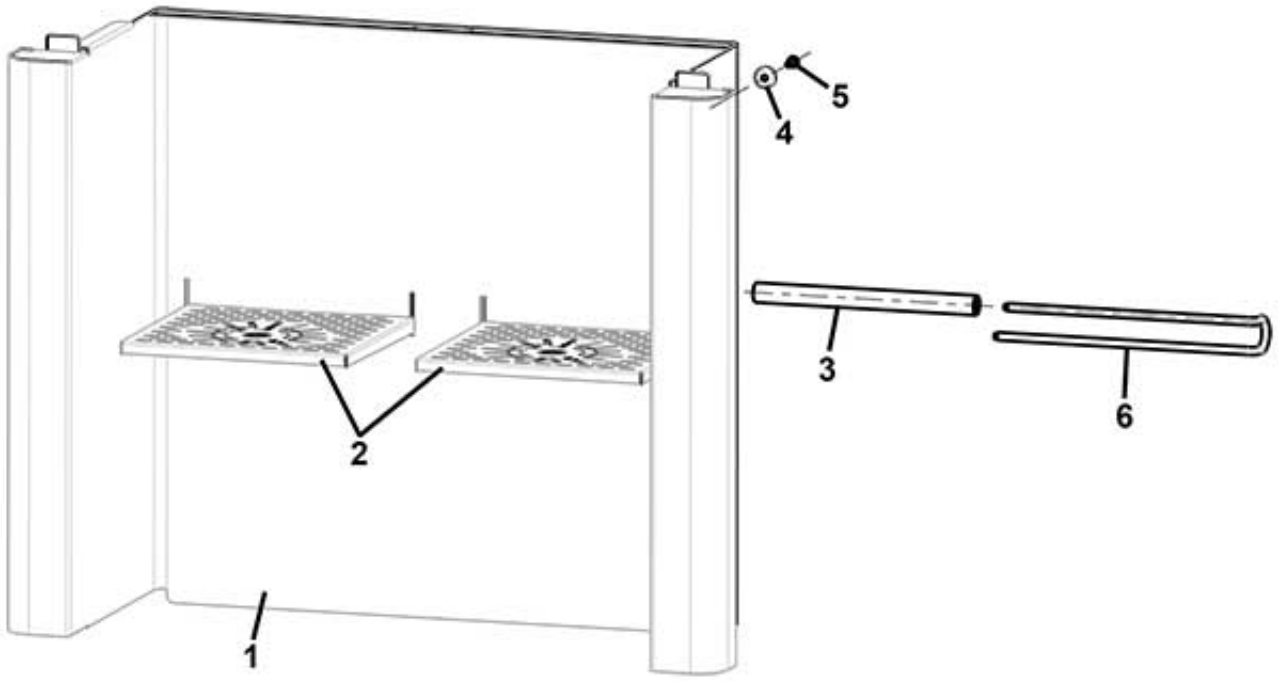




www.rheavendors.com tel: 0039 02 966 551 fax: 0039 02 96 55 086 email: rheavendors@rheavendors.com exclusive property of rheavendors group

| cups stop | | |
|---|---|---|
| **Pos.** | **Code** | **Description** |
| 1 | Z0010021311 | 2 CUPS SUPPORT FRAME |
| 2 | Z0010020898 | CUP SUPPORT |
| 3 | Z0010020262 | COUNTERWEIGHT SUPPORT |
| 4 | ELT0030760 | MAGNET D 10X3 |
| 5 | VIT0000121 | SCREW COUNT FLAT HEAD M3X8 |
| 6 | Z0010020263 | HINGE FORK |



www.rheavendors.com tel: 0039 02 966 551 fax: 0039 02 96 55 086 email: rheavendors@rheavendors.com exclusive property of rheavendors group

**mixers**

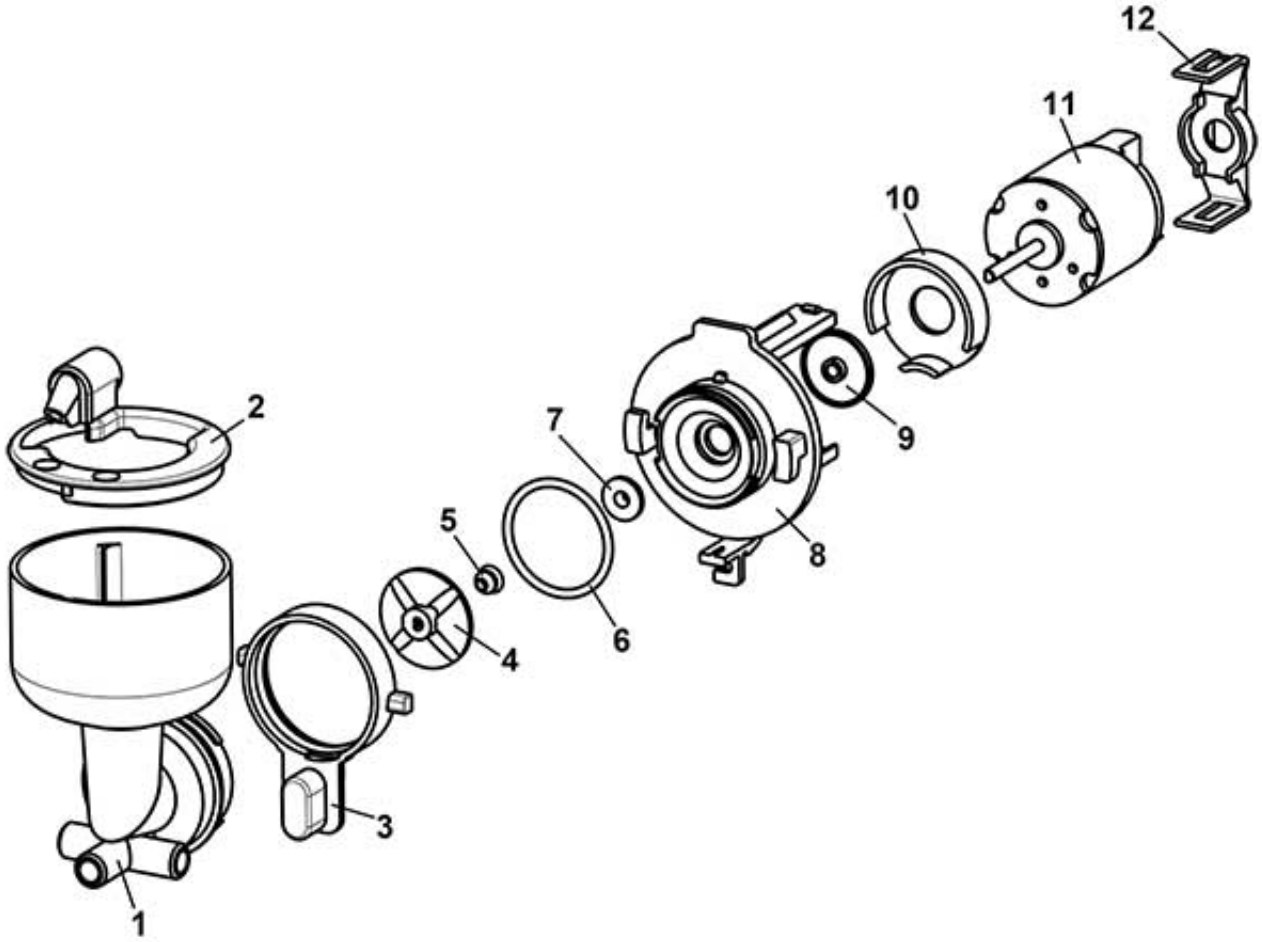




www.rheavendors.com tel: 0039 02 966 551 fax: 0039 02 96 55 086 email: rheavendors@rheavendors.com exclusive property of rheavendors group

| mixers | | |
|---|---|---|
| **Pos.** | **Code** | **Description** |
| 1/a | Z0080200110L | MIXING BOWL L.W/H20 BREAKER |
| 1/b | Z0080200111R | MIXING BOWL R.W/H20 BREAKER |
| 1/c | Z0080200112C | MIXING BOWL F.W/H20 BREAKER |
| 2 | Z0080100042 | MIXER RING W/PIPE X4,25 BLACK |
| 3 | Z0080100006IC | LOCK RING RAL2011 |
| 4 | Z0080100011 | MIXER FAN |
| 5 | Z0080100102 | MIXER SHAFT GASKET |
| 6 | GUA0000084 | OR 3131 RED SILICONE A60 |
| 7 | Z0080100015 | MIXER BUSH |
| 8 | Z0080100005 | MOTOR MIXER BASE |
| 9 | Z0080100024 | MIXER FAN |
| 10 | Z0080100023IC | MIXER COVER RAL2011 |
| 11 | Z0090003023 | MIXER MOTOR 24V DC SHAFT D.4 |
| 12 | Z0080100009IC | MIXER MOTOR SUPPORT RAL2011 |
| 100 | Z0080100001R | § MIXER BOWL BASE+MOTOR From pos.4 to pos. 12 |



www.rheavendors.com tel: 0039 02 966 551 fax: 0039 02 96 55 086 email: rheavendors@rheavendors.com exclusive property of rheavendors group

**product containers**

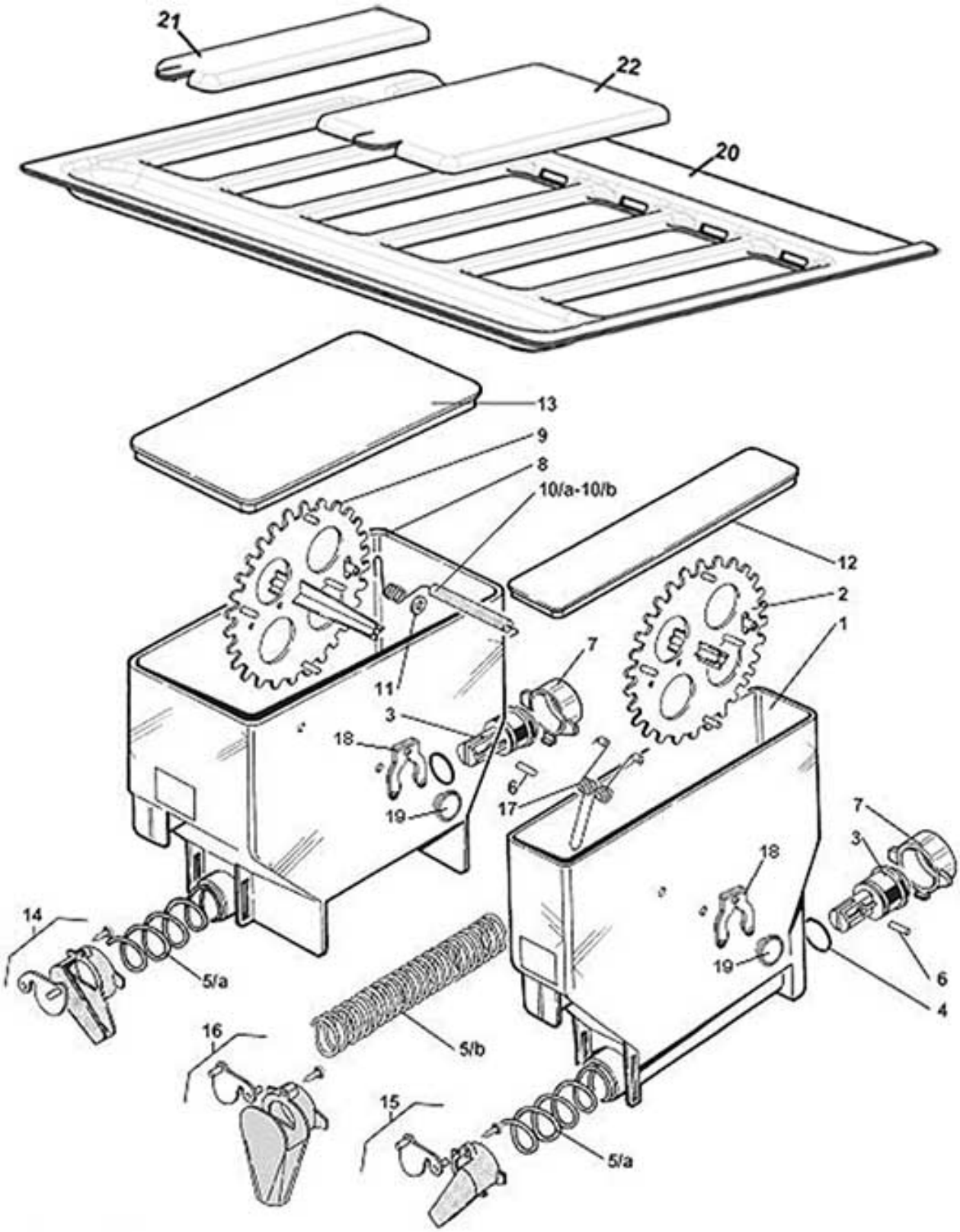




www.rheavendors.com tel: 0039 02 966 551 fax: 0039 02 96 55 086 email: rheavendors@rheavendors.com exclusive property of rheavendors group

| product containers | | |
|---|---|---|
| **Pos.** | **Code** | **Description** |
| 1 | Z0230030233 | INGREDIENT CANISTER 54 265 |
| 2 | Z0230030236AB | § WHEEL MM54 |
| 3 | Z0230030012 | SPIRAL PIN |
| 4 | GUA0000083 | OR 123 RED SILICONE A70 |
| 5/a | Z0230030014 | SPIRAL 18 |
| 5/b | Z0230030013 | SPIRAL 9 |
| 6 | VIT0005106 | PIN 2X14 |
| 7 | Z0230030011 | REAR BUSH |
| 8 | Z0230030234 | § CANISTER 110-265 W/PIN |
| 9 | Z0230030237AB | § WHEEL MM110 |
| 10/a | Z0230030064 | AGITATOR 112 - RIGHT OUTLET |
| 10/b | Z0230030062 | AGITATOR 112 - LEFT OUTLET |
| 11 | VIT0003210 | WASHER 8,4X16X1,6 |
| 12 | Z0230030006 | CANISTER 55 LID |
| 13 | Z0230030009 | CANISTER 112 LID |
| 14/a | Z0230030058R | § INGRED. CHUTE-RIGHT ORANGE |
| 14/b | Z0230030044R | § INGREDIENT CHUTE-RIGHT RED |
| 15/a | Z0230030057R | § INGREDIENT CHUTE-LEFT ORANGE |
| 15/b | Z0230030043R | § INGREDIENT CHUTE-LEFT RED |
| 16/a | Z0230030059R | § INGRED. CHUTE-FRONTALORANGE |
| 16/b | Z0230030055R | § INGREDIENT CHUTE-FRONTAL RED |
| 17 | Z0230030060-05 | PRODUCT AGITATOR |
| 18 | Z0230030239 | WHEEL PIN FORK |
| 19 | Z0230030238-02 | WHEEL PIN |
| 20 | Z0230030600 | PRODUCT CONTAINER UPPER LID |
| 21 | Z0230030601 | SINLGE LID |
| 22 | Z0230030602 | DOUBLE LID |
| 100 | Z0230030250R | § CANIS. 54-265 WHEEL18 W/LID |
| 101 | Z0230030262R | § CAN. 110-265 AGIT.18 W/LID-L |
| 102 | Z0230030260R | § CAN. 110-265 AGIT.18 W/LID-R |
| 103 | Z0230030261R | § CAN. 110-265 AGIT.9 W/LID-R |
| 104 | Z0230030251R | § CANIS. 54-265 WHEEL9 W/LID |



www.rheavendors.com tel: 0039 02 966 551 fax: 0039 02 96 55 086 email: rheavendors@rheavendors.com exclusive property of rheavendors group

**boiler**

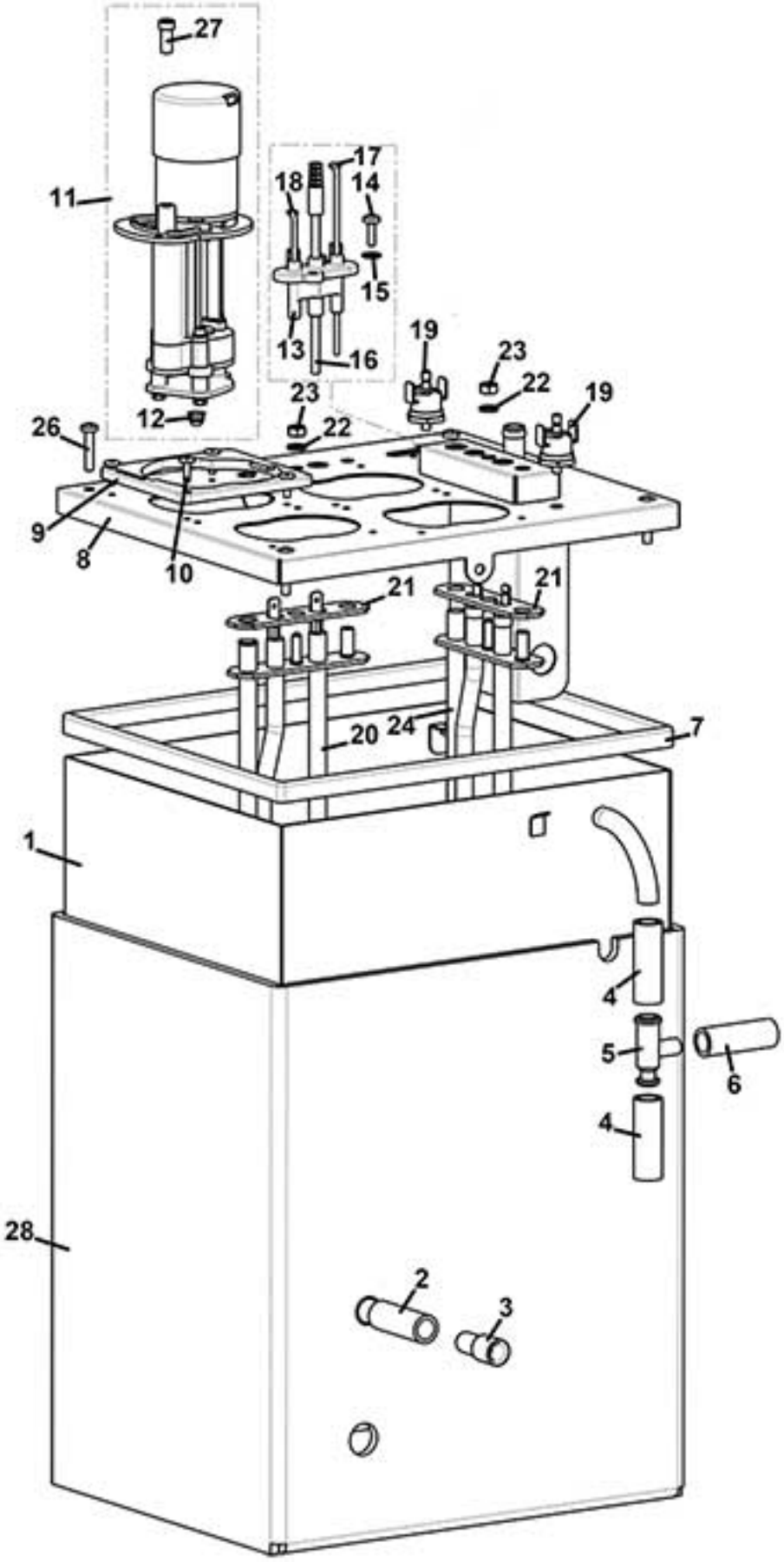




www.rheavendors.com tel: 0039 02 966 551 fax: 0039 02 96 55 086 email: rheavendors@rheavendors.com exclusive property of rheavendors group

| boiler | | |
|---|---|---|
| **Pos.** | **Code** | **Description** |
| 1 | Z0600016322 | BOILER TANK |
| 2/a | TSIL10/14T-10 | SILICON HOSE 10X14 MT.10 |
| 2/b | TSIL10/14T-50 | SILICON HOSE 10X14 MT.50 |
| 3 | 650001057 | DRAINER PLUG |
| 4/a | TSIL07/11T-10 | SILICON HOSE 7X11 MT.10 |
| 4/b | TSIL07/11T-50 | SILICON HOSE 7X11 MT.50 |
| 5 | Z0600016028 | T CONNECTOR |
| 6/a | TSIL05/08T-10 | SILICON HOSE 5X8 MT.10 |
| 6/b | TSIL05/08T-50 | SILICON HOSE 5X8 MT.50 |
| 7 | GUA0005019 | EDGE GASKET |
| 8 | Z0600016331 | BOILER COVER |
| 9 | Z0600012462 | PUMP ADAPTER |
| 10 | VIT0007036 | BLIND RIVET 3X10 |
| 11 | Z0600016405R | § BOILER PUMP |
| 12 | Z0080100102 | MIXER SHAFT GASKET |
| 13 | Z0600016089 | PROBE SUPPORT |
| 14 | VIT0002015 | SCREW ST HEAD CAP M3.5X9.5 |
| 15 | VIT0003211 | WASHER 4,3X9X0,8 |
| 16 | ELE0000963R | § TEMPERATURE PROBE+SENSOR |
| 17 | Z0600016053 | MINIMUM LEVEL PROBE |
| 18 | Z0600016054 | MAXIMUM LEVEL PROBE |
| 19 | ELE0000980 | CLIXSON 92° |
| 20 | Z0600016141 | 230V 3000 W  HEATING ELEMENT W |
| 21 | Z0600016084 | HEATING ELEMENT GASKET |
| 22 | VIT0003203 | WASHER 5,3X10X1 |
| 23 | VIT0004804 | NUT M5 |
| 24 | Z0600016142R | § HEATING ELEMENT 3100W 230V |
| 26 | VIT0001011 | SCREW HEAD TAP CAP M4X20 |
| 27 | Z0600016020 | REDUCTION D.3,5 |
| 28 | Z0600016323 | BOILER INSULATION |
| 100 | Z0600016321CL | BOILER 230V From pos.1 to pos.26 |



www.rheavendors.com tel: 0039 02 966 551 fax: 0039 02 96 55 086 email: rheavendors@rheavendors.com exclusive property of rheavendors group

**control panel**

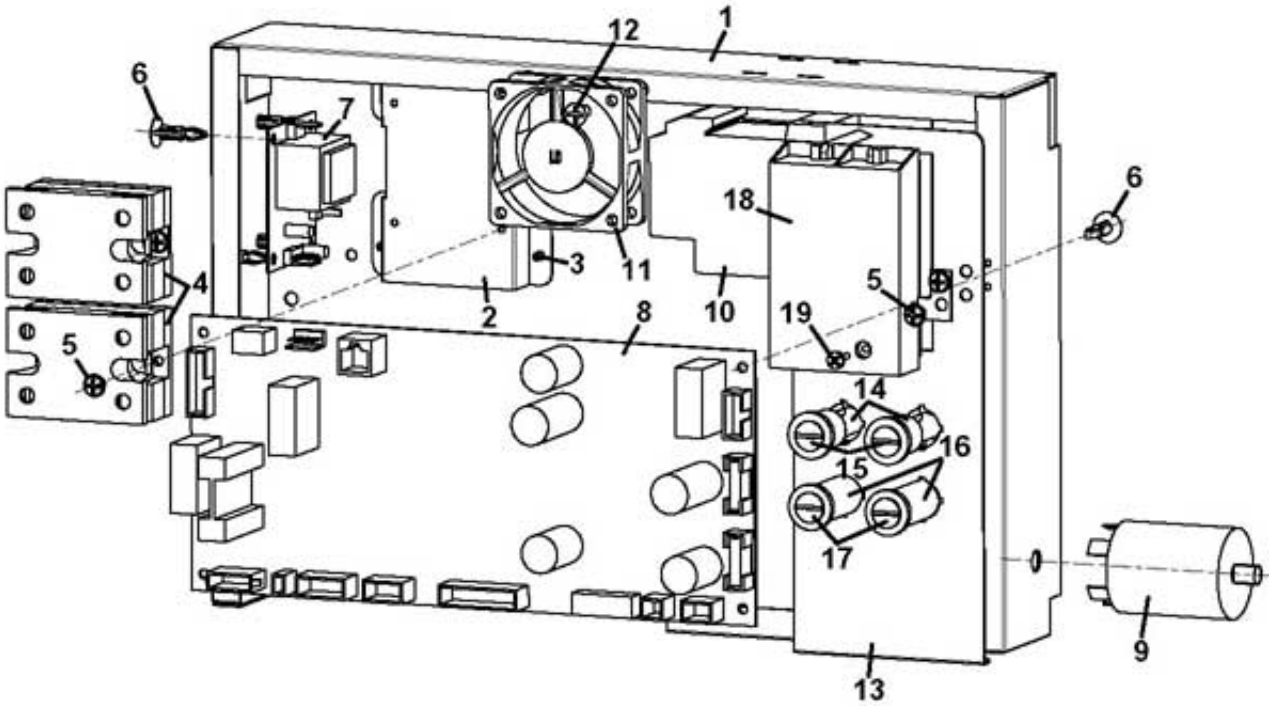




www.rheavendors.com tel: 0039 02 966 551 fax: 0039 02 96 55 086 email: rheavendors@rheavendors.com exclusive property of rheavendors group

| control panel | | |
|---|---|---|
| **Pos.** | **Code** | **Description** |
| 1 | Z0130014005CM | CONTROL PANEL STRUCTURE (9006) |
| 2 | Z0130014009 | RELAY FIXING SUPPORT |
| 3 | VIT0007021 | BLIND RIVET 3X6 |
| 4 | ELE0001012R | § RELAY Check the heating element connectors status |
| 5 | VIT0002401 | SCREW ST HEAD CAP M3.5X9.5 |
| 6 | ELE0062020 | BOARD SUPPORT |
| 7 | SCH0005060 | H20 LEVEL BOARD |
| 8 | SCH0007260R | §CPU/POWER BOARD |
| 9 | ELE0009060 | NOISE FILTER 16A UL |
| 10 | ELE0001018 | DIFFERENTIAL CURRENT DEVICE |
| 11 | ELE0000462 | FAN 24V DC-LOW SPEED |
| 12 | VIT0002115 | SCREW TSP 4,8X16 |
| 13 | Z0130014008CM | HOLDER FUSE SUPPORT |
| 14 | ELE0003507 | FUSE HOLDER 250V 16A |
| 15 | ELE0003023 | FUSE 6.3X32 4A |
| 16 | ELE0003509 | FUSE HOLDER 250V 16/20A |
| 17 | ELE0003043 | FUSE 6,3X32 16A |
| 18 | ELE0002411 | CLAMP PA 223S/6P |
| 19 | VIT0002471 | SCREW 3,5X15 FOR PLASTIC |
| 100 | Z0130014000CL | ELECTRICAL PANEL |



www.rheavendors.com tel: 0039 02 966 551 fax: 0039 02 96 55 086 email: rheavendors@rheavendors.com exclusive property of rheavendors group

## OPTIONAL KIT

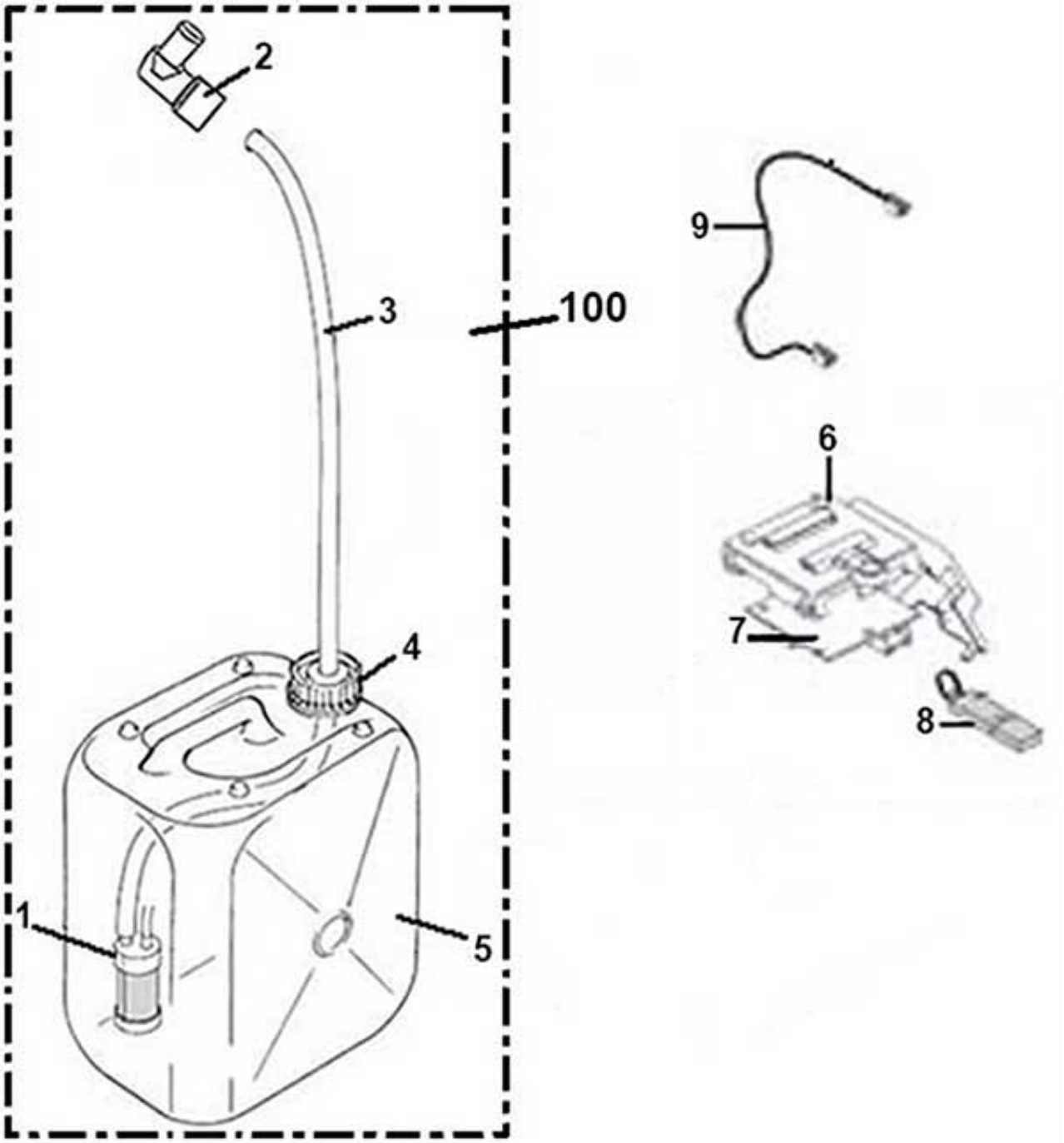




www.rheavendors.com tel: 0039 02 966 551 fax: 0039 02 96 55 086 email: rheavendors@rheavendors.com exclusive property of rheavendors group

| OPTIONAL KIT | | |
|---|---|---|
| **Pos.** | **Code** | **Description** |
| 1 | Z0110004028 | IMMERSION PUMP 24V DC |
| 2 | Z0100003013 | ELBOW CONNECTOR |
| 3/a | TSIL07/11T-10 | SILICON HOSE 7X11 MT.10 |
| 3/b | TSIL07/11T-50 | SILICON HOSE 7X11 MT.50 |
| 4 | CON0000305 | PLUG TANK 20LT |
| 5 | CON0000304R | TANK 20 LT + PLUG |
| 6 | Z0020040238 | FLASH MEMORY CASING |
| 7 | SCH0006100 | FLASH 2004 BOARD |
| 8 | Z0020040310CL/2 | RHEA FLASH MEMORY(RED) |
| 9 | ELT0030564 | CPU PWR BOARD CONNEC CABL C125 |
| 100 | KIT0110004049 | IMMERSION PUMP KIT W/TANK 20LT |
| 101 | Z0020040238R | § FLASH MEMORY INTERFACE Pos.6+7 |



www.rheavendors.com tel: 0039 02 966 551 fax: 0039 02 96 55 086 email: rheavendors@rheavendors.com exclusive property of rheavendors group