vending machine

spare parts manual

www.rheavendors.com tel: 0039 02 966 551 fax: 0039 02 96 55 086 email: rheavendors@rheavendors.com exclusive property of rheavendors group

cabinet (instant version)

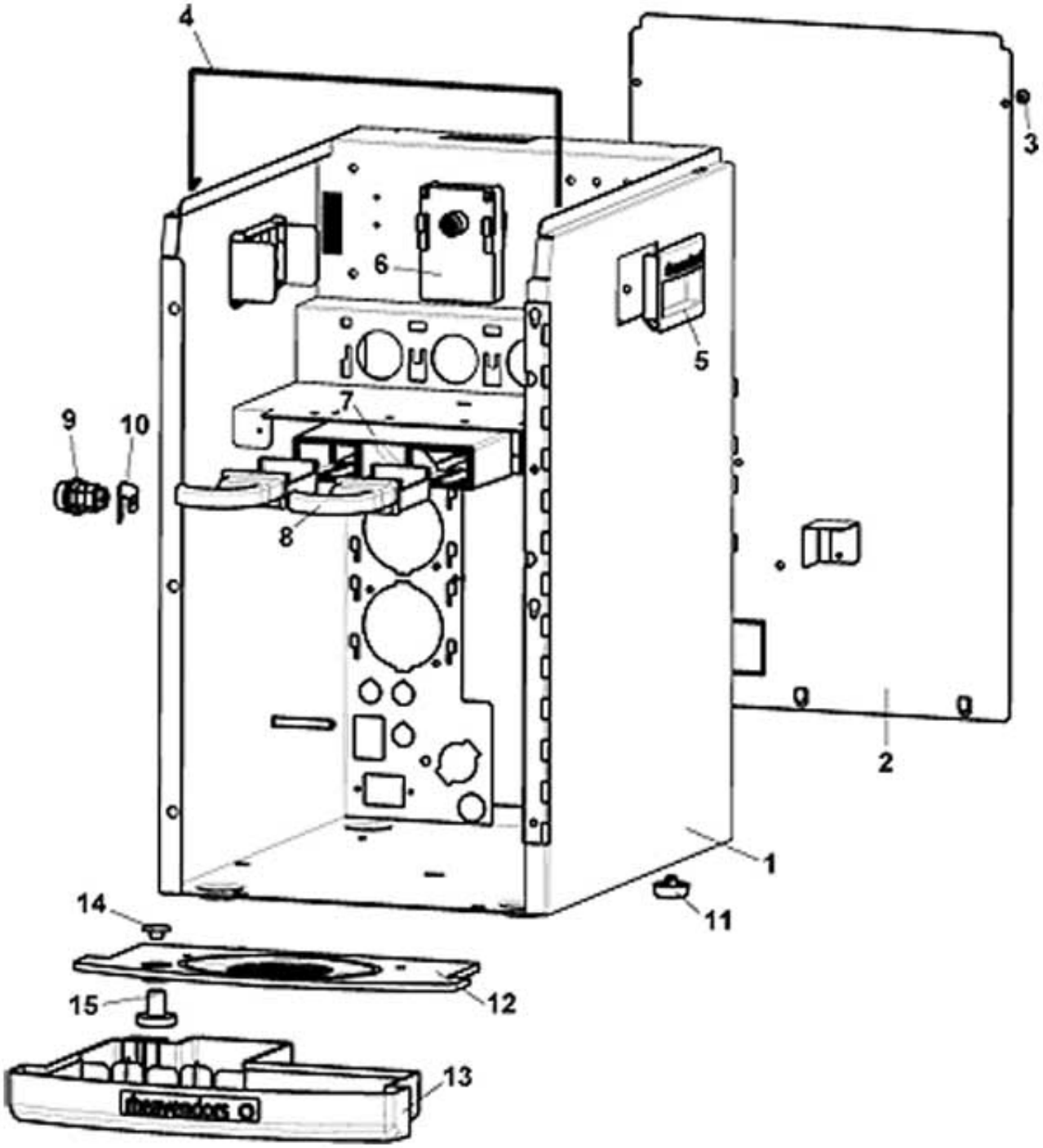

www.rheavendors.com tel: 0039 02 966 551 fax: 0039 02 96 55 086 email: rheavendors@rheavendors.com exclusive property of rheavendors group

cabinet (instant version)		
Pos.	**Code**	**Description**
1/a	Z0010027335R	BLACK CABINET + PACKAGE
1/b	Z0010027335CM	XX OC CABINET STRUCTURE RAL9006
2/a	Z0010027320	REAR COVER RAL 9005
	Z0010027320CM	REAR COVER RAL 9005 MERCEDES GREY RAL 9006
	Z0010027320CZ	REAR COVER RAL 9005 IRON GREY RAL 7011
	Z0010027320GH	REAR COVER RAL 9005 BEIGE RAL 1015
2/b	Z0010027320CM	REAR COVER SILVER
3	VIT0002401	SCREW ST HEAD CAP M3.5X9.5
4	Z0010027262	UPPER LID HOOK
5/a	Z0010027058	HANDLE
	Z0010027058CU	HANDLE NISSAN SILVER GREY
	Z0010027058NA	HANDLE BLACK
5/b	Z0010027058CM	EXTERNAL HANDLE (RAL9006)
6	Z0090002113	MOTOR 24 DC 97 RPM
7	Z0010027021	TRAP DRAWER
8	Z0010027022	TRAP DRAWER REMOVABLE
9	SER0000024	LOCK MM20 + KEY 3374
10	Z0020035615	LOCK BRACKET
11	GUA0011011	MACHINE FOOT D.25
12/a	Z0020037117NA	DRIP TRAY GRID BLACK
12/b	Z0020037117XC	DRIP TRAY GRID CHROME
13	Z0020037116NA	DRIP TRAY BLACK
14	Z0020037045	WASTE FLOAT RAL 9005
15	Z0020037046	WASTE FLOAT RAL 3020

www.rheavendors.com tel: 0039 02 966 551 fax: 0039 02 96 55 086 email: rheavendors@rheavendors.com exclusive property of rheavendors group

cabinet (espresso version)

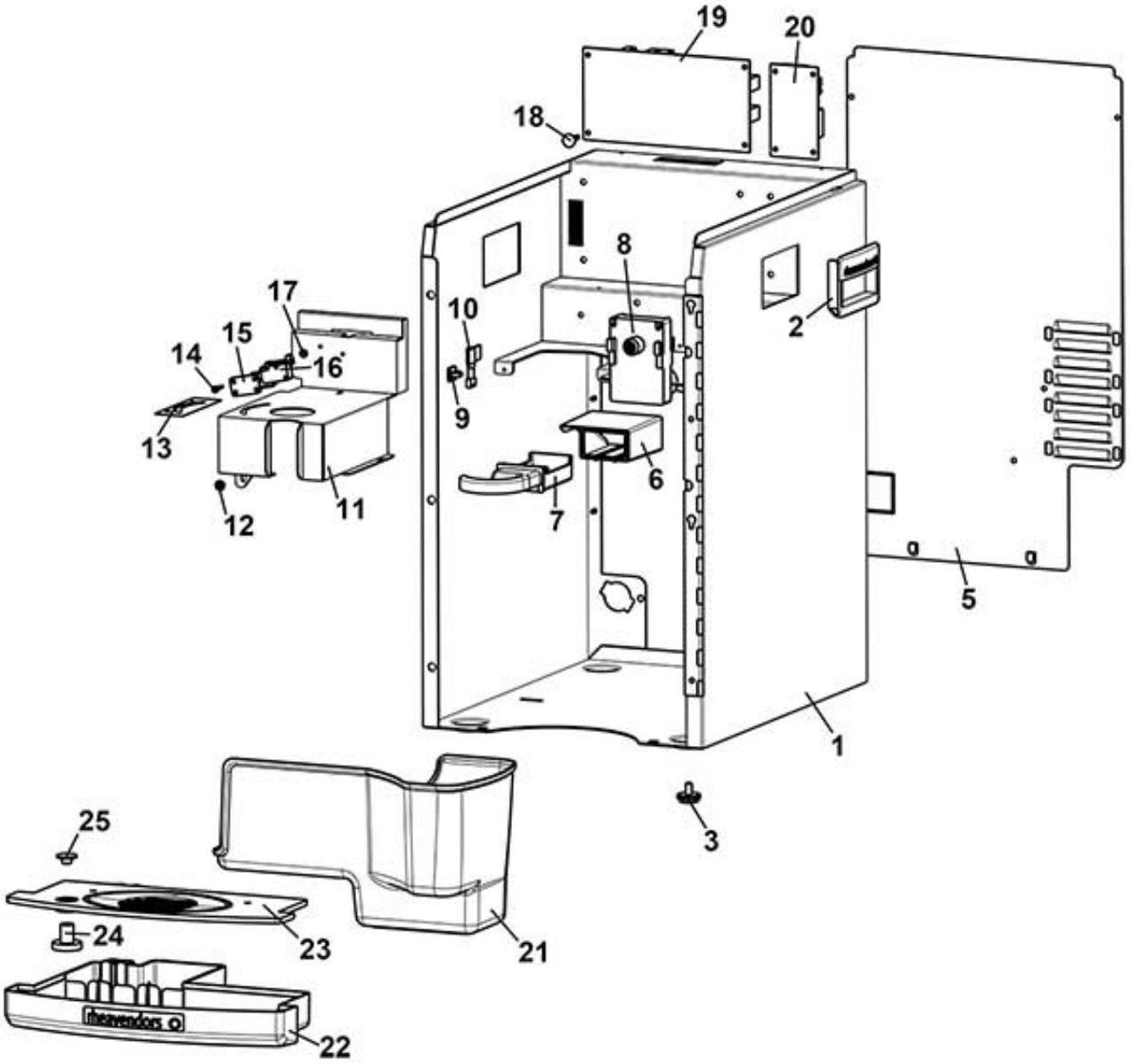

www.rheavendors.com tel: 0039 02 966 551 fax: 0039 02 96 55 086 email: rheavendors@rheavendors.com exclusive property of rheavendors group

cabinet (espresso version)		
Pos.	**Code**	**Description**
1/a	Z0010027425-06	CABINET STRUCTURE (BLACK)
1/b	Z0010027425-06CM	CABINET STRUCTURE (SILVER)
2/a	Z0010027058	HANDLE
	Z0010027058CU	HANDLE NISSAN SILVER GREY
	Z0010027058NA	HANDLE BLACK
2/b	Z0010027058CM	EXTERNAL HANDLE (RAL9006)
3	Z0010020169	MACHINE FOOT D.22X7 M.6X11
5/a	Z0010027232	REAR PANEL RAL 9005
5/b	Z0010027232CM	REAR DOOR (RAL 9006)
6	Z0010027214	TRAP DRAWER
7	Z0010027022	TRAP DRAWER REMOVABLE
8	Z0090002113	MOTOR 24 DC 97 RPM
9	ELE0062253	WIRING CLAMP ADESIVE
10	Z0270011109IC	SERVICE KEY RAL2011
11	Z0010027248	GRINDER COVER
12	VIT0002401	SCREW ST HEAD CAP M3.5X9.5
13	Z0010027249	GRINDER STICKER
14	VIT0000007	SCREW HEAD TAP CAP M3X20
15	4600010014	SPACER
16	ELE0001522	MICROSWITCH
17	VIT0004701	NUT M3
18	ELE0062020	BOARD SUPPORT
19		See table control and power logic
20		See table control and power logic
21	Z0010027229-02	GROUNDS HOPPER
22	Z0020037116NA	DRIP TRAY BLACK
23/a	Z0020037117NA	DRIP TRAY GRID BLACK
23/b	Z0020037117XC	DRIP TRAY GRID CHROME
24	Z0020037046	WASTE FLOAT RAL 3020
25	Z0020037045	WASTE FLOAT RAL 9005

www.rheavendors.com tel: 0039 02 966 551 fax: 0039 02 96 55 086 email: rheavendors@rheavendors.com exclusive property of rheavendors group

rear view cabinet (instant version)

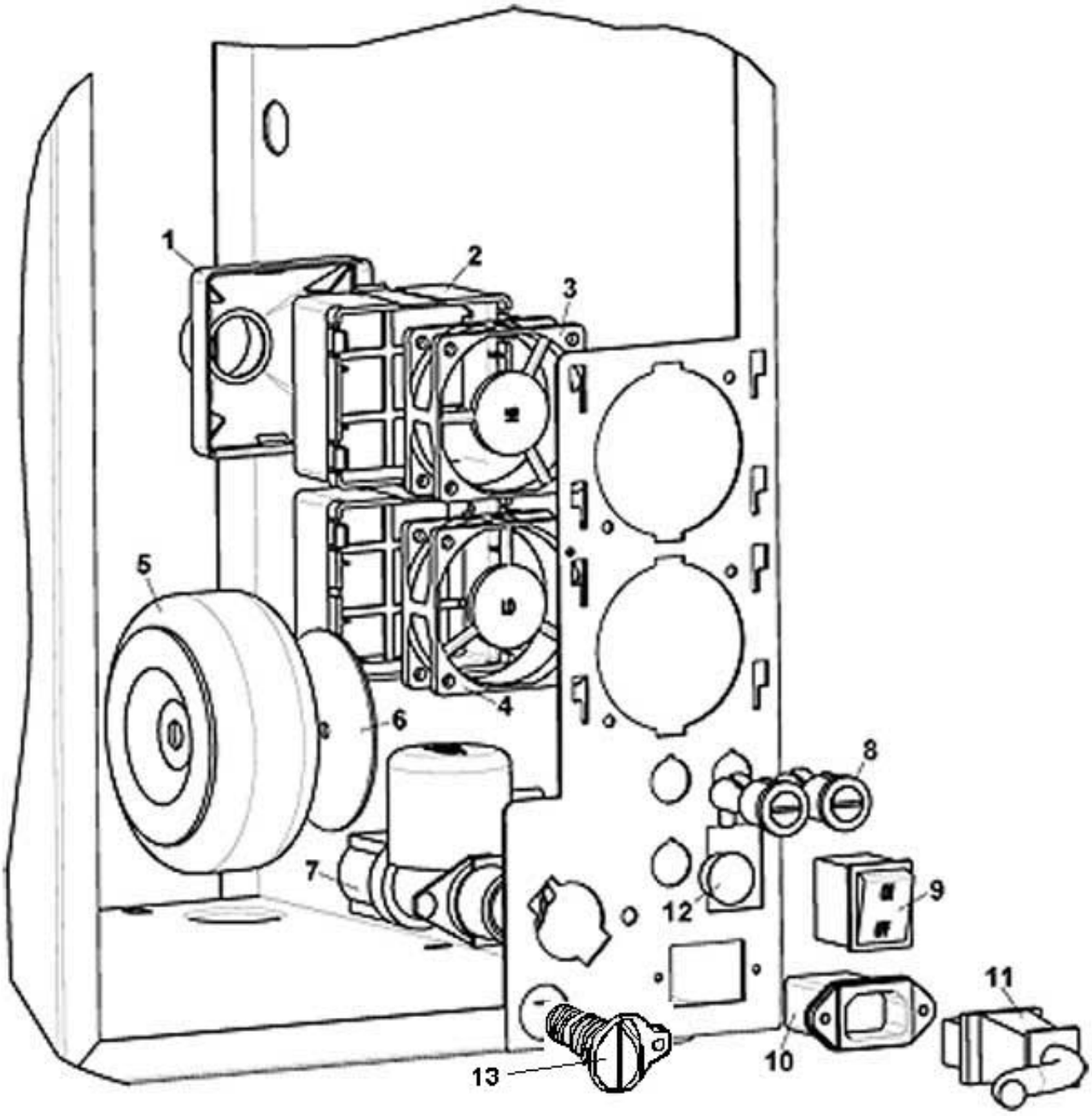

www.rheavendors.com tel: 0039 02 966 551 fax: 0039 02 96 55 086 email: rheavendors@rheavendors.com exclusive property of rheavendors group

rear view cabinet (instant version)		
Pos.	**Code**	**Description**
1	Z0010027065	FAN CONNECTOR
2	Z0010027064	FAN SUPPORT
3	ELE0000461R	§FAN 24V DC-HIGH SPEED
4	ELE0000462R	§ FAN 24V DC-LOW SPEED
5	ELE0000555R	§ TOROIDAL TRANSFORMER 230V
6	Z0010027319	TRANSFORMER DISK
7	Z0110001119	WATER INLET VALVE 24V DC
8	ELE0003508CL	FUSE HOLDER+FUSE 12A
9	ELE0002014	BIPOLAR SWITCH 15A 250V
10	ELE0002322	MAINS SOCKET 250V 10A
11	ELE0055008	SUPPLY CABLE+PLUG+SCHUK.SOCKET
12	GUA0011010	PLUG
13	Z0600016455	H2O OUTLET PLUG

www.rheavendors.com tel: 0039 02 966 551 fax: 0039 02 96 55 086 email: rheavendors@rheavendors.com exclusive property of rheavendors group

rear view cabinet (espresso version)

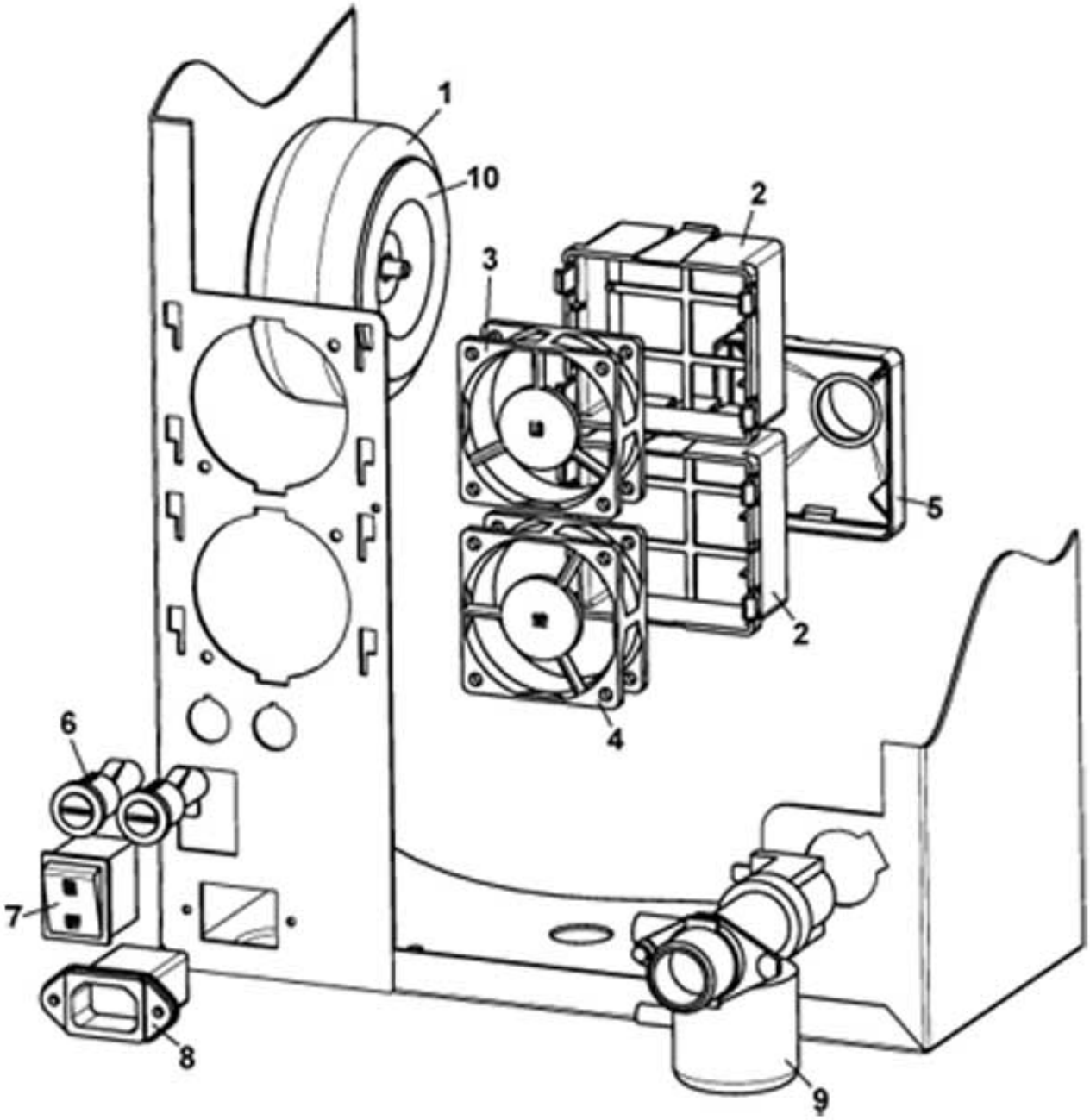

www.rheavendors.com tel: 0039 02 966 551 fax: 0039 02 96 55 086 email: rheavendors@rheavendors.com exclusive property of rheavendors group

rear view cabinet (espresso version)		
Pos.	**Code**	**Description**
1	ELE0000555R	§ TOROIDAL TRANSFORMER 230V
2	Z0010027064	FAN SUPPORT
3	ELE0000462R	§ FAN 24V DC-LOW SPEED
4	ELE0000461R	§FAN 24V DC-HIGH SPEED
5	Z0010027065	FAN CONNECTOR
6	ELE0003508CL	FUSE HOLDER+FUSE 12A
7	ELE0002014	BIPOLAR SWITCH 15A 250V
8	ELE0002322	MAINS SOCKET 250V 10A
9	Z0110001058	WATER INLET VALVE 24V DC
10	Z0010027319	TRANSFORMER DISK

www.rheavendors.com tel: 0039 02 966 551 fax: 0039 02 96 55 086 email: rheavendors@rheavendors.com exclusive property of rheavendors group

UPPER COVER

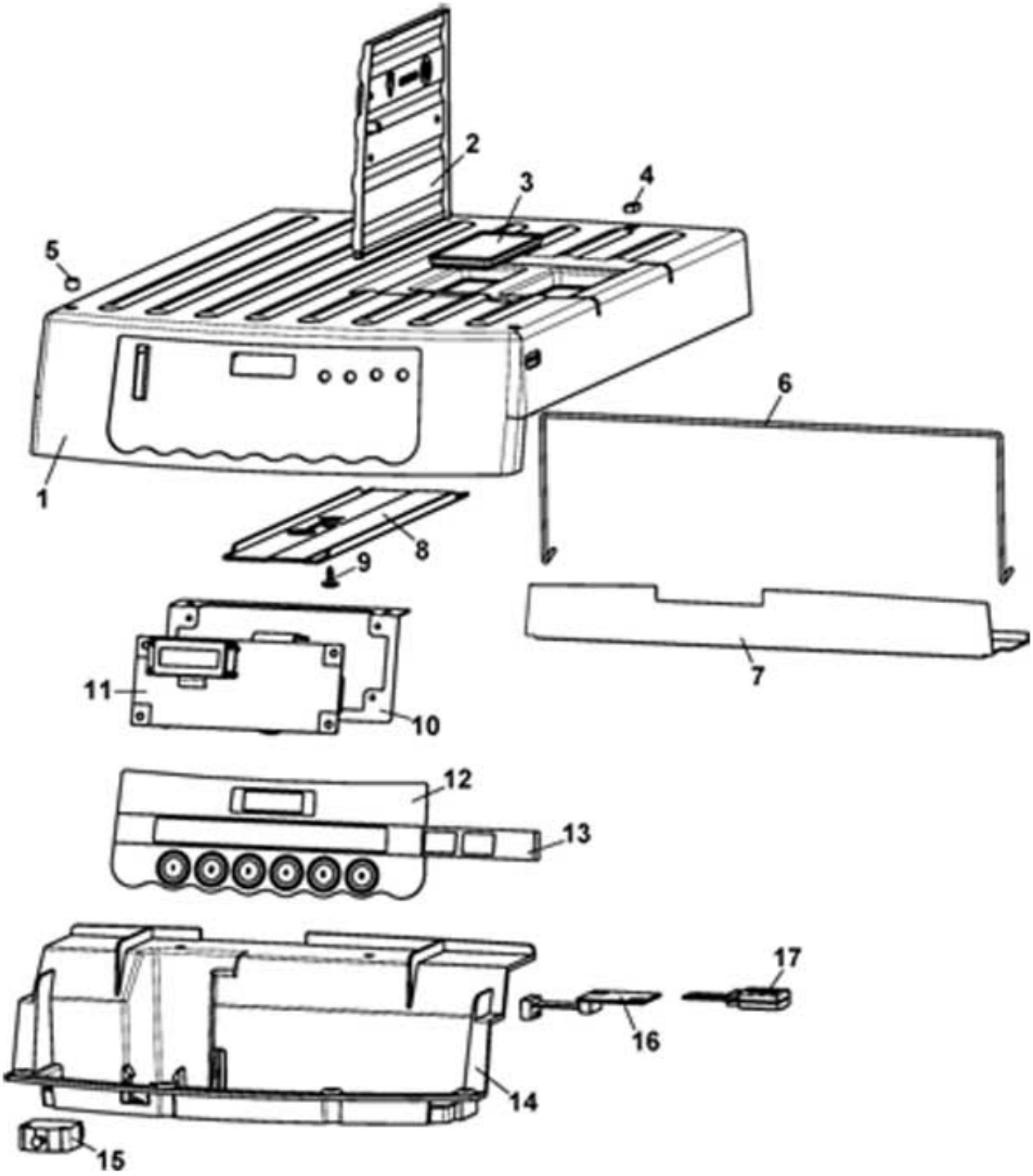

www.rheavendors.com tel: 0039 02 966 551 fax: 0039 02 96 55 086 email: rheavendors@rheavendors.com exclusive property of rheavendors group

UPPER COVER		
Pos.	**Code**	**Description**
1	Z0010027251/2	
2	Z0010027252NA	H2O WATER TANK LID RAL 9005
3	Z0010027259	INLET WATER COVER PLUG
4	Z0010027343	PLUG SUPPORT COVER
5	Z0010027344	RING PLUG
6	Z0010027262	UPPER LID HOOK
7	Z0010027260	UPPER HINGE COVER
8	Z0010027274-01	CABLE COVER
9	VIT0002401	SCREW ST HEAD CAP M3.5X9.5
10	Z0010027268	DISPLAY SUPPORT RAL 9005
11		See table control and power logic
12	Z0010027351-03	KEYPAD 6 BUTTON
13		Please communicate the language and the configuration needed
14	Z0010027253NA	UPPER LID BLACK
15	ELE0002019	SWITCH 16A 250V
16		See table control and power logic
17	Z0020040310CL/2	RHEA FLASH MEMORY(RED)

www.rheavendors.com tel: 0039 02 966 551 fax: 0039 02 96 55 086 email: rheavendors@rheavendors.com exclusive property of rheavendors group

DOOR

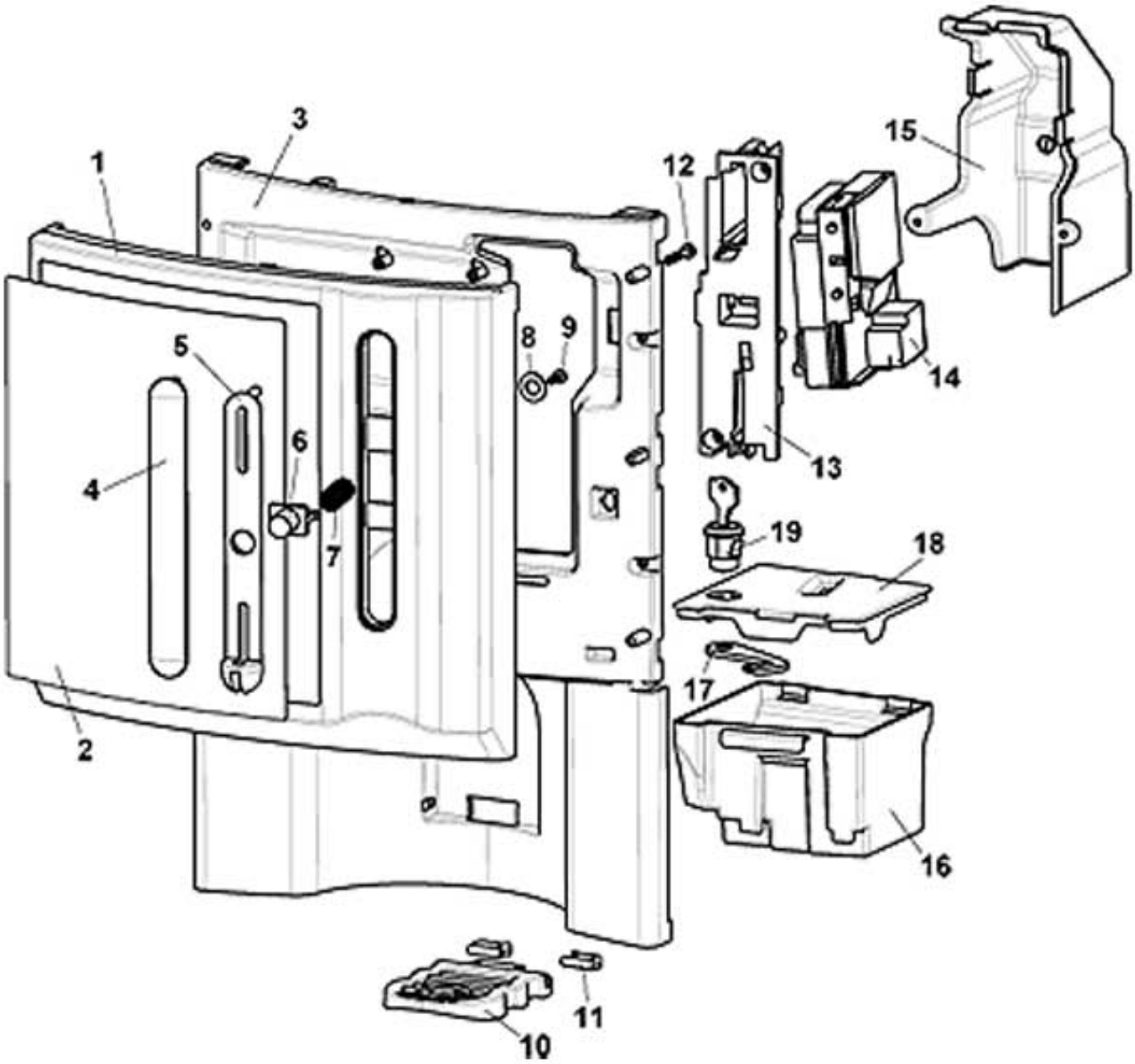

www.rheavendors.com tel: 0039 02 966 551 fax: 0039 02 96 55 086 email: rheavendors@rheavendors.com exclusive property of rheavendors group

DOOR		
Pos.	**Code**	**Description**
1	Z0020037143	DOOR BLACK
	Z0020037143CM	DOOR BLACK MERCEDES GREY RAL 9006
2		Please communicate the panel needed
3	Z0020037142	DOOR FRAME
4	Z0020035029KB	COIN ENTRY BLANK.PLATE
4	Z0020035029NA	COIN ENTRY BLANK.PLATE BLACK
4	Z0020035029CM	COIN ENTRY BLANK.PLATE RAL9006
5	Z0020035031CM	COIN ENTRY PLATE RAL9006
5	Z0020035031KB	COIN ENTRY PLATE
5	Z0020035031NA	COIN ENTRY PLATE BLACK
6	Z0020035033CM	COIN RETURN BUTTON RAL9006
6	Z0020035033KA	COIN RETURN BUTTON RAL3020
6	Z0020035033KB	COIN RETURN BUTTON
6	Z0020035033NA	COIN RETURN BUTTON BLACK
7	Z0020035034	COIN RETURN BUTTON SPRING
8	VIT0003006	WASHER 8,4X17X1,6
9	VIT0002469	SCREW HEAD TAP M3.5X10
10	Z0020037122AG	CUP SUPPORT
10	Z0020037122NA	CUP SUPPORT BLACK
11	Z0020037124NA	PIN
12	VIT0002461	SCREW HEAD TAP M4.2X26
13	Z0020035032NA	PAYM SYSTEM SUPPORT
14		Let us know pament system model when ordering
15	Z0020037129	PAYM SYSTEM COVER
16	Z0020037126	COIN BOX
17	Z0020037128	COIN BOX HOOK
18	Z0020037127	COIN BOX LID
19	SER0000015	LOCK MM20 C.3430
100	Z0020037125CL	COIN BOX ASSEMBLED (from pos. 16 to pos. 19)

www.rheavendors.com tel: 0039 02 966 551 fax: 0039 02 96 55 086 email: rheavendors@rheavendors.com exclusive property of rheavendors group

mixer plan

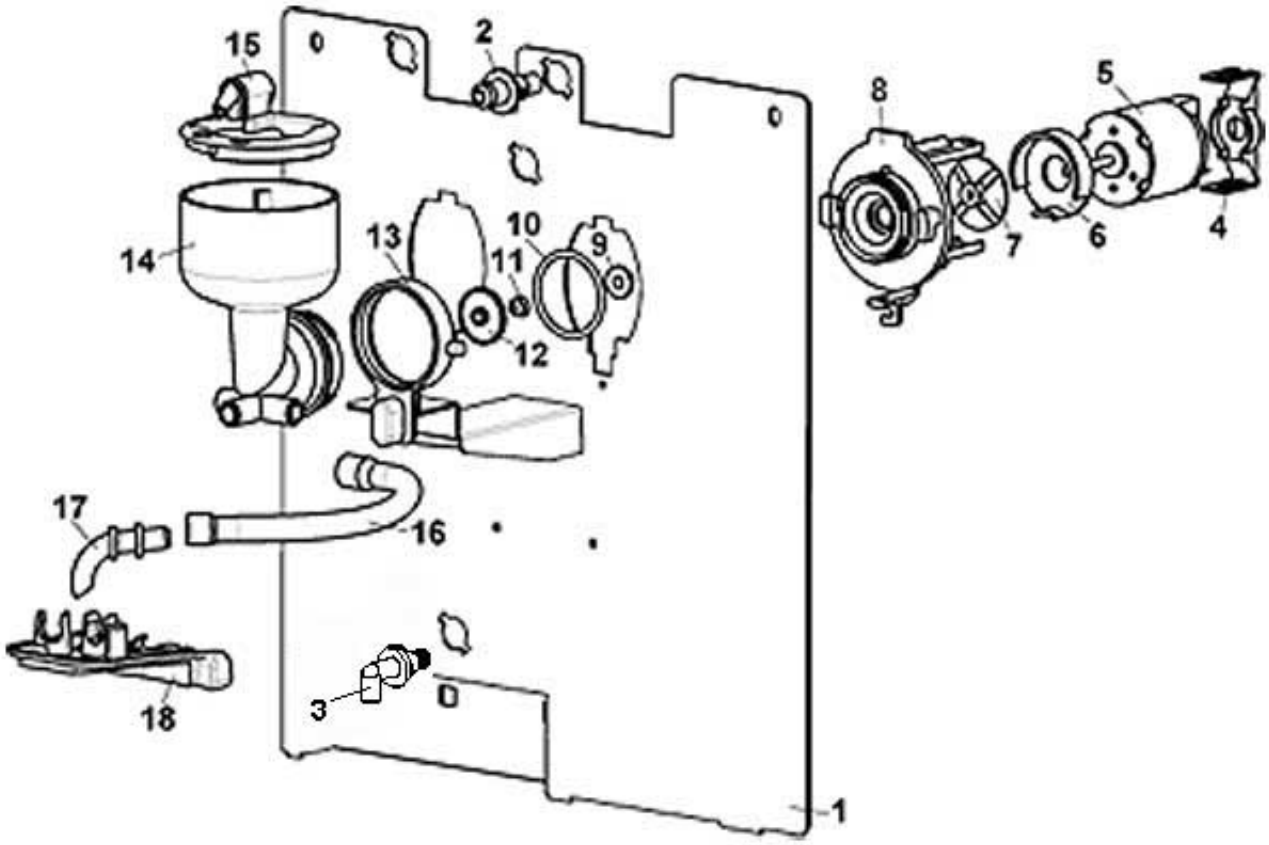

www.rheavendors.com tel: 0039 02 966 551 fax: 0039 02 96 55 086 email: rheavendors@rheavendors.com exclusive property of rheavendors group

mixer plan		
Pos.	**Code**	**Description**
1	Z0010027315	MIXER PLATE BLACK
	Z0010027315CM	MIXER PLATE BLACK MERCEDES GREY RAL 9006
	Z0010027315CZ	MIXER PLATE BLACK IRON GREY RAL 7011
	Z0010027315GH	MIXER PLATE BLACK BEIGE RAL 1015
2	Z0080100043	MIXER CONNECTOR BLACK
3	Z0080100084	90° CONNECTOR
4	Z0080100009IC	MIXER MOTOR SUPPORT RAL2011
5	Z0090003023	MIXER MOTOR 24V DC SHAFT D.4
6	Z0080100023IC	MIXER COVER RAL2011
7	Z0080100011	MIXER FAN
8	Z0080100005	MOTOR MIXER BASE
9	Z0080100015	MIXER BUSH
10	GUA0000084	OR 3131 RED SILICONE A60
11	Z0080100102	MIXER SHAFT GASKET
12	Z0080100024	MIXER FAN
13	Z0080100006IC	LOCK RING RAL2011
14/a	Z0080200110L	MIXING BOWL L.W/H20 BREAKER
14/b	Z0080200111R	MIXING BOWL R.W/H20 BREAKER
14/c	Z0080200112C	MIXING BOWL F.W/H20 BREAKER
15	Z0080100042	MIXER RING W/PIPE X4,25 BLACK
16/a	TSIL06/11T-10	SILICON HOSE 6X11 MT.10
16/b	TSIL06/11T-50	SILICON HOSE 6X11 MT.50
17	Z0010020052	PRODUCT NOZZLE
18	Z0020037123NA	NOZZLES HOLDER
100	Z0080100001R	§ MIXER BOWL BASE+MOTOR

www.rheavendors.com tel: 0039 02 966 551 fax: 0039 02 96 55 086 email: rheavendors@rheavendors.com exclusive property of rheavendors group

assembled mixer plan

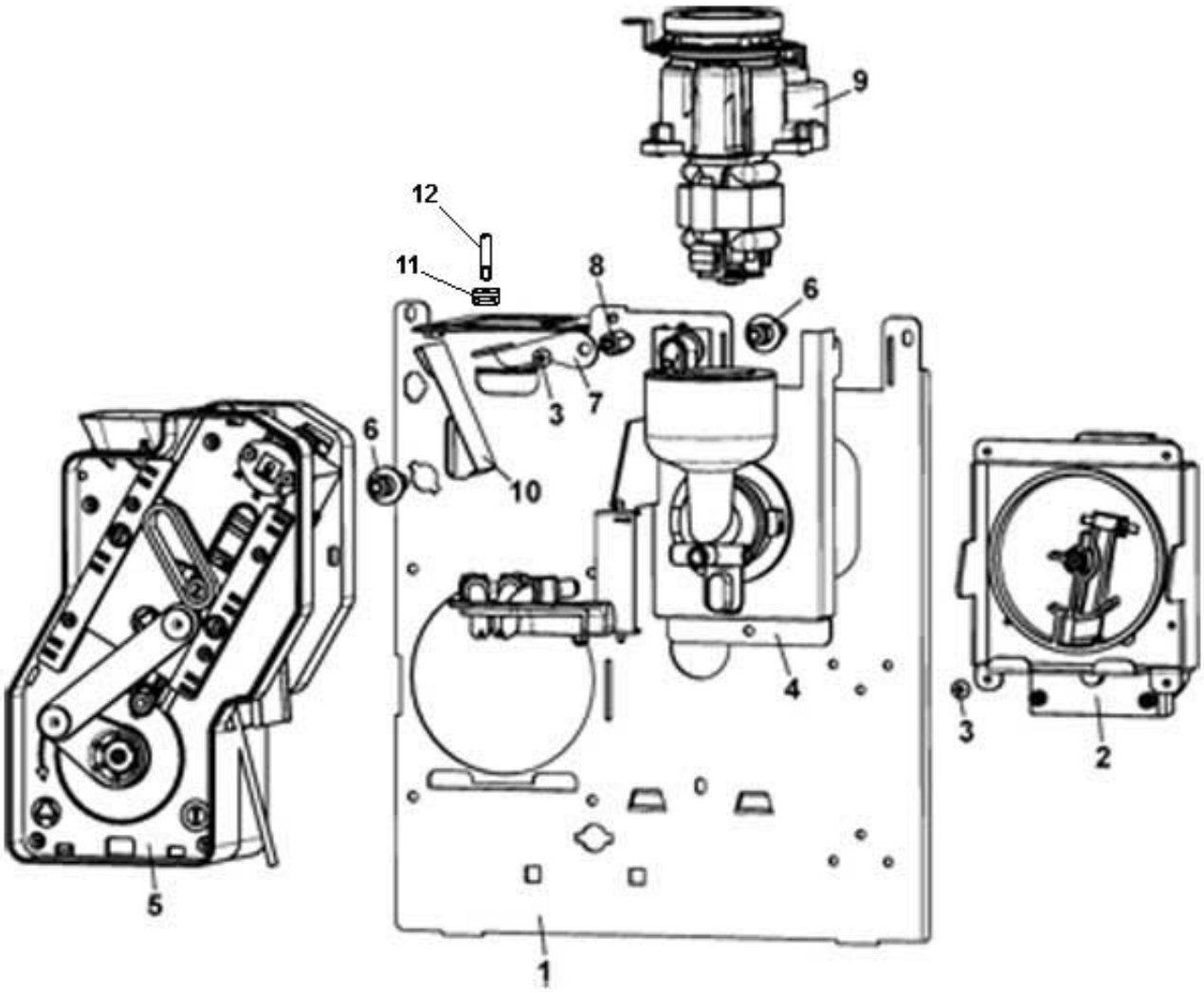

www.rheavendors.com tel: 0039 02 966 551 fax: 0039 02 96 55 086 email: rheavendors@rheavendors.com exclusive property of rheavendors group

assembled mixer plan		
Pos.	**Code**	**Description**
1	Z0010027219	MIXER PLATE RAL 9005
2		See table micro coffee group motor support
3	VIT0000030	SCREW HEAD TAP CAP M4X7
4		See table mixer
5		See table micro coffee group
6	Z0080100043	MIXER CONNECTOR BLACK
7	Z0010027226-03	COFFEE BREWER LEVER
8	Z0010020196	BREWER FIX LEVER
9		See table vertical mill group
10	Z0250008038	COFFEE POWDER CHUTE
11	GUA0010551	ELECTRICAL GROMMET
12	VIT0009165	E MILL SCREW

www.rheavendors.com tel: 0039 02 966 551 fax: 0039 02 96 55 086 email: rheavendors@rheavendors.com exclusive property of rheavendors group

mixer

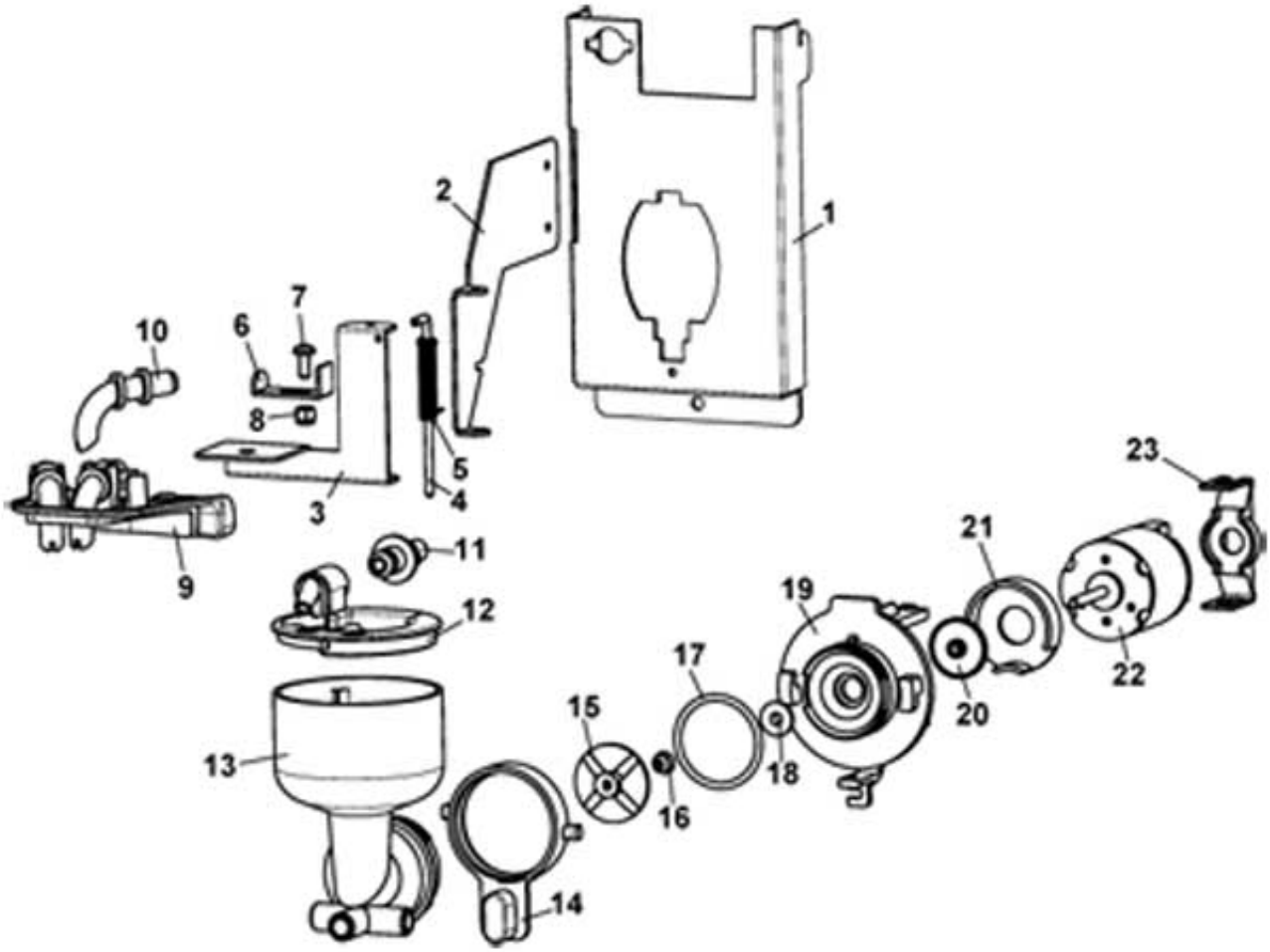

www.rheavendors.com tel: 0039 02 966 551 fax: 0039 02 96 55 086 email: rheavendors@rheavendors.com exclusive property of rheavendors group

mixer		
Pos.	**Code**	**Description**
1	Z0260012365NA	MIXER PLATE BLACK
2	Z0010027246	BLACK SIDE JOINT
3	Z0010027247	BLACK FRONT JOINT
4	Z0010020137	PIN
5	Z0010020138	SPRING
6	Z0010020737-02	STOPPER LEVER
7	VIT0000038	SCREW HEAD TAP CAP M4X10
8	VIT0004810	NUT M4
9	Z0020037123NA	NOZZLES HOLDER
10	Z0010020052	PRODUCT NOZZLE
11	Z0080100043	MIXER CONNECTOR BLACK
12	Z0080100042	MIXER RING W/PIPE X4,25 BLACK
13/a	Z0080200110L	MIXING BOWL L.W/H20 BREAKER
13/b	Z0080200111R	MIXING BOWL R.W/H20 BREAKER
13/c	Z0080200112C	MIXING BOWL F.W/H20 BREAKER
14	Z0080100006IC	LOCK RING RAL2011
15	Z0080100011	MIXER FAN
16	Z0080100102	MIXER SHAFT GASKET
17	GUA0000084	OR 3131 RED SILICONE A60
18	Z0080100015	MIXER BUSH
19	Z0080100005	MOTOR MIXER BASE
20	Z0080100024	MIXER FAN
21	Z0080100023IC	MIXER COVER RAL2011
22	Z0090003023	MIXER MOTOR 24V DC SHAFT D.4
23	Z0080100009IC	MIXER MOTOR SUPPORT RAL2011
100	Z0080100001R	§ MIXER BOWL BASE+MOTOR

www.rheavendors.com tel: 0039 02 966 551 fax: 0039 02 96 55 086 email: rheavendors@rheavendors.com exclusive property of rheavendors group

micro coffee group motor support

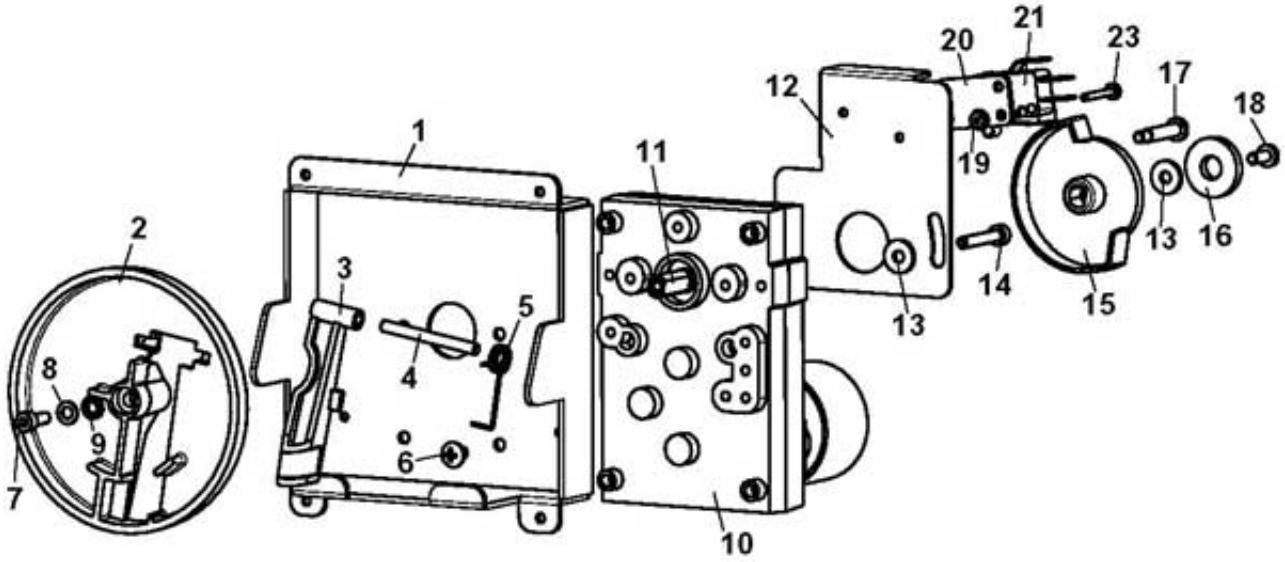

www.rheavendors.com tel: 0039 02 966 551 fax: 0039 02 96 55 086 email: rheavendors@rheavendors.com exclusive property of rheavendors group

micro coffee group motor support		
Pos.	**Code**	**Description**
1	Z0260010128KE	MICRO BREWER MOTOR RED SUPPORT
2	Z0250008012	MOTOR CRANK
3	Z0250008034	HOOKING LEVER
4	VIT0005205	DOWEL PIN 4X40
5	Z0250008059	SPRING
6	VIT0000030	SCREW HEAD TAP CAP M4X7
7	VIT0005508	SCREW HEX HEAD REC TAP M4X12
8	VIT0003003	WASHER 4,3X8X0,8
9	VIT0003103	SPRING WASHER 4,3
10	Z0090002191R	§ GEARBOX MOTOR 11RPM 24V DC Pos. 10+11
11	Z0090002191R	§ GEARBOX MOTOR 11RPM 24V DC Pos. 10+11
12	Z0250008093	MICRO PLATE
13	VIT0003301	WASHER 4,3X12X1,5
14	VIT0005521	SCREW HEX HEAD REC TAP M4X25
15	Z0250008043	MICRO GROUP READER DISK
16	Z0250008091	SPACER
17	Z0250008126	PIN M4
18	VIT0000012	SCREW HEAD TAP CAP M4X10
19	VIT0004701	NUT M3
20	4600010014	SPACER
21	ELE0001529	MICROSWITCH WITH LEVER
23	VIT0000007	SCREW HEAD TAP CAP M3X20
100	Z0260010128R2	§MICRO BREW MOTOR SUPPORT(RED)

www.rheavendors.com tel: 0039 02 966 551 fax: 0039 02 96 55 086 email: rheavendors@rheavendors.com exclusive property of rheavendors group

vertical mill group

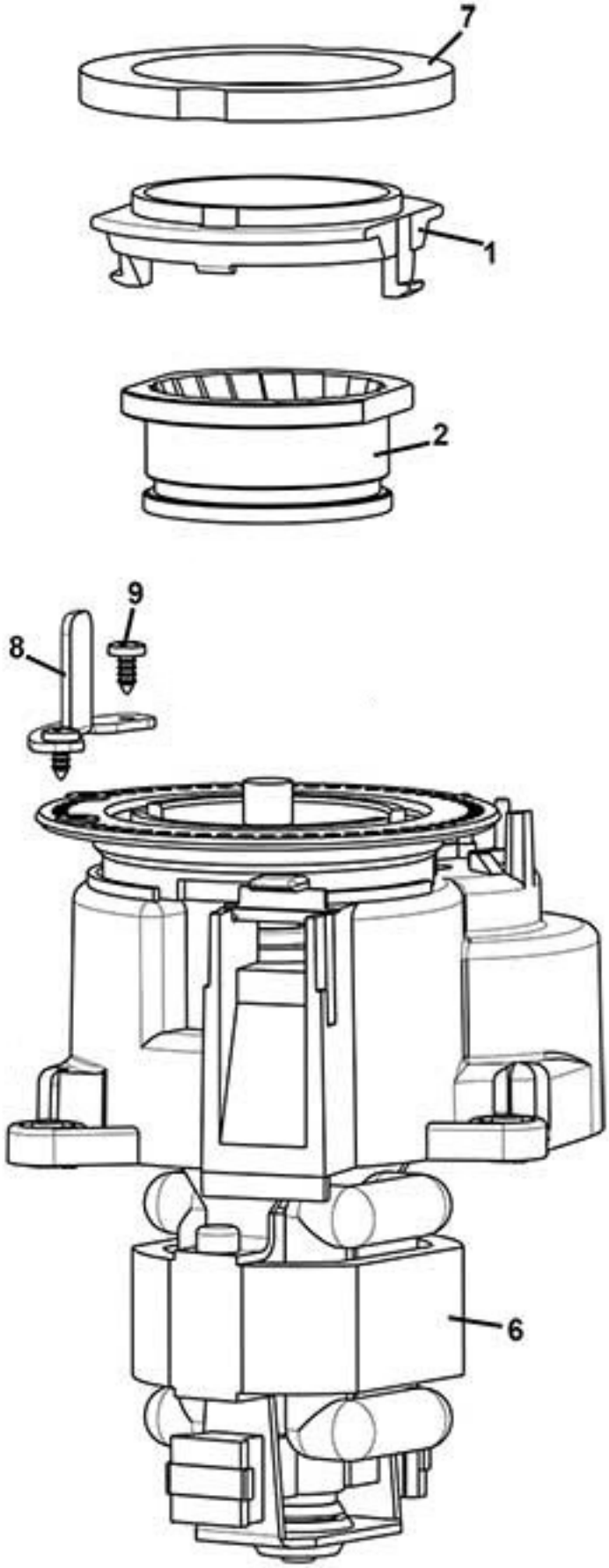

www.rheavendors.com tel: 0039 02 966 551 fax: 0039 02 96 55 086 email: rheavendors@rheavendors.com exclusive property of rheavendors group

vertical mill group		
Pos.	**Code**	**Description**
1	Z0320004503	GRINDER RING
2	Z0320004505	UPPER GRINDER
6		No more available, pls order complete grinder
7	Z0320004517	GRINDER GASKET H5
8	Z0320004731	GRINDER REGULATION LEVER
9	VIT0002001	SCREW ST HEAD CAP M2.9X6.5
100	Z0320004500CL4	§ GRINDER 230V GREEN From pos. 1 to pos. 9 excluded pos.7

www.rheavendors.com tel: 0039 02 966 551 fax: 0039 02 96 55 086 email: rheavendors@rheavendors.com exclusive property of rheavendors group

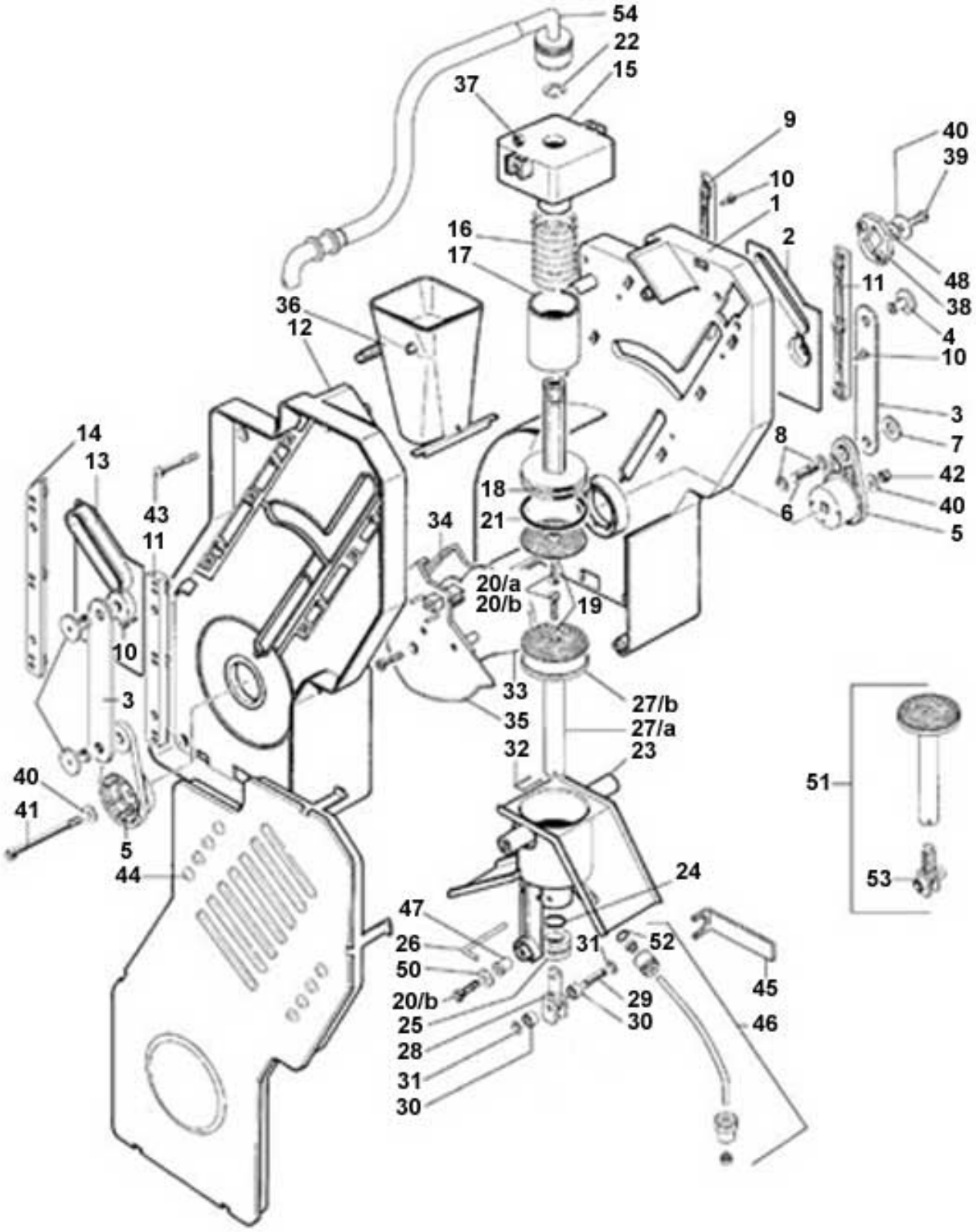

www.rheavendors.com tel: 0039 02 966 551 fax: 0039 02 96 55 086 email: rheavendors@rheavendors.com exclusive property of rheavendors group

micro coffee group		
Pos.	**Code**	**Description**
1	Z0250008005R	§ MICRO BREWER COVERS-L.H+R.H
2	Z0250008084	INFUSION CHAMBER CAM-RIGHT
3	Z0250008009	CONNECTING ROD
4	Z0250008028	CONNECTING ROD PIN
5	Z0250008011	RIGHT CRANK
6	Z0250008014	PIN
7	Z0250008042	ANTIVIBRATION WASHER
8	VIT0006515	RING 5
9	Z0250008031	REAR RIGHT GUIDE
10	VIT0002026	SCREW ST HEAD CAP M3.5X6.5
11	Z0250008033	FRONTAL GUIDE
12	Z0250008005R	§ MICRO BREWER COVERS-L.H+R.H
13	Z0250008085	INFUSION CHAMBER CAM-LEFT
14	Z0250008032	REAR LEFT GUIDE
15	Z0250008086	UPPER FILTER SUPPORT
16	Z0250008024	UPPER FILTER SPRING
17	Z0250008087	SPRING COVER PIPE
18/a	Z0250008026R	§ UPPER COFFEE FILTER D 36 For Coffee beans group D. 36 (Pos.18/a+19/a+21/a+20)
18/b	Z0250008208R	§ UPPER COFFEE FILTER D.40 For Coffee beans group D. 40 --- (Pos. 18/b+19/b+21/b+20)
19/a	Z0250008099	COFFEE FILTER 33,4 For Coffee beans group D. 36
19/b	Z0250008211	COFFEE FILTER 37,3 For Coffee beans group D. 40
20/a	VIT0001202	SCREW COUNT FLAT HEAD M3X14
20/b	VIT0000121	SCREW COUNT FLAT HEAD M3X8
21/a	GUA0000080	OR 4112 RED SILICONE LSR70 For Coffee beans group D. 36
21/b	GUA0000097	OR 4131 RED SILICONE LSR70 For Coffee beans group D. 40
22	VIT0006513	RING 8
23/a	Z0250008046R	§ BREWER INFUSION CHAMBER For Coffee beans group D. 36
23/b	Z0250008206R	§ LOWER COFFEE FILTER D.40 For Coffee beans group D. 40
24	GUA0000065	OR 112 SILICON
25	Z0250008053	LOWER INLET CUP BUSH
26	Z0250008029	FUNNEL PIN
27/a	Z0250008108	LOWER FILTER SHAFT For Coffee beans group D. 36
27/b	Z0250008122	COFFEE FILTER LOW 36 For Coffee beans group D. 36
27/c	Z0250008209IC	LOWER COFFEE FILTER D.40 For Coffee beans group D. 40
28	Z0250008106	BEARING SUPPORT
29	Z0250008021	BEARING SHAFT
30	Z0250008022	BEARING
31	VIT0006517	RING 3.2
32	Z0250008027	LOWER FILTER PIN
33	Z0250008083	CAM
34	Z0250008016	CAM RIGHT
35	Z0250008017	CAM LEFT
36	Z0250008036	COFFEE FUNNEL
37	VIT0004803	NUT M4
38	Z0250008035	SETTING PLATE
39	VIT0000032	SCREW HEAD TAP CAP M4X8
40	VIT0003309	WASHER4,3X16X1,5

www.rheavendors.com tel: 0039 02 966 551 fax: 0039 02 96 55 086 email: rheavendors@rheavendors.com exclusive property of rheavendors group

micro coffee group		
41	VIT0005523	SCREW HEX HEAD REC TAP M4X60
42	VIT0004810	NUT M4
43	VIT0002461	SCREW HEAD TAP M4.2X26
44	Z0250008039CM	MICRO BREWER COVER-L.H RAL9006
44	Z0250008039IC	MICRO BREWER COVER-L.H RAL2011
45	Z0250008048	KEY FOR NUT
46	Z0250008110CL	§ WATER INLET PIPE
47	VIT0009203	INSERT
48	VIT0003451	SPRING WASHER 4,2
50	Z0250008088	WASHER
51	Z0250008109R	§ LOW.COFFEE FILTER D.36+BEAR.
52	GUA0000061	OR 2010 VITON 80 BLACK
53	Z0250008107R	BEARING SUPPORT
54	Z0250008076CL	§ COFFEE OUTLET PIPE
100	Z0250008001R	COFFEE BREWER MICRO D.36 For Coffee beans group D. 36
101	Z0250008201R	COFFEE BREWER MICRO D.40 For Coffee beans group D. 40
104	Z0250008108R	§ LOWER COFFEE FILTER D.36

www.rheavendors.com tel: 0039 02 966 551 fax: 0039 02 96 55 086 email: rheavendors@rheavendors.com exclusive property of rheavendors group

heated micro coffee group

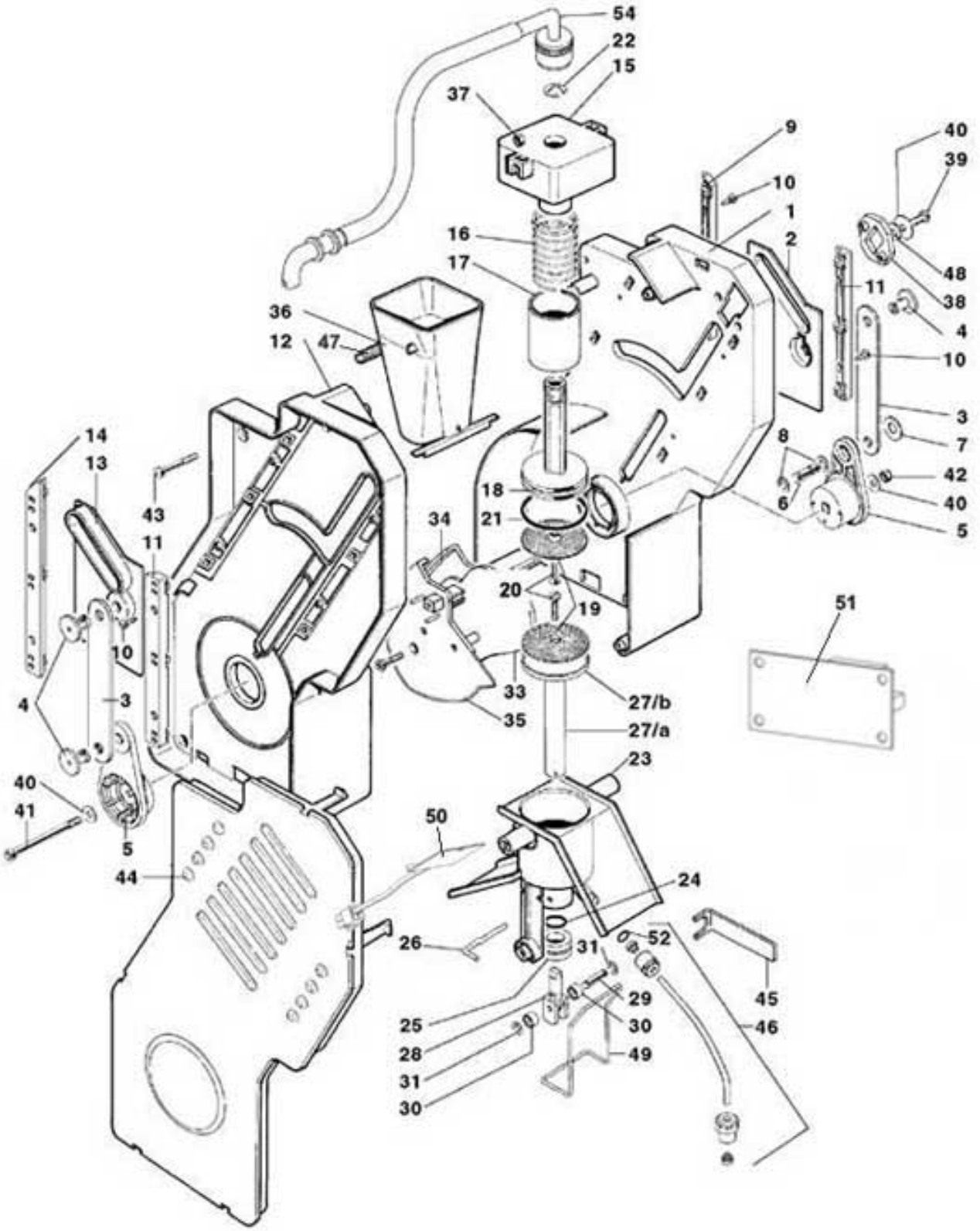

www.rheavendors.com tel: 0039 02 966 551 fax: 0039 02 96 55 086 email: rheavendors@rheavendors.com exclusive property of rheavendors group

heated micro coffee group		
Pos.	**Code**	**Description**
1	Z0250008005R	§ MICRO BREWER COVERS-L.H+R.H
2	Z0250008084	INFUSION CHAMBER CAM-RIGHT
3	Z0250008009	CONNECTING ROD
4	Z0250008028	CONNECTING ROD PIN
5	Z0250008011	RIGHT CRANK
6	Z0250008014	PIN
7	Z0250008042	ANTIVIBRATION WASHER
8	VIT0006515	RING 5
9	Z0250008031	REAR RIGHT GUIDE
10	VIT0002026	SCREW ST HEAD CAP M3.5X6.5
11	Z0250008033	FRONTAL GUIDE
12	Z0250008005R	§ MICRO BREWER COVERS-L.H+R.H
13	Z0250008085	INFUSION CHAMBER CAM-LEFT
14	Z0250008032	REAR LEFT GUIDE
15	Z0250008086	UPPER FILTER SUPPORT
16	Z0250008024	UPPER FILTER SPRING
17	Z0250008087	SPRING COVER PIPE
18	Z0250008226R	§ UPPER COFFEE FILTER D.36 For Coffee beans group D. 36 (From pos.18 to pos.21)
19	Z0250008019	COFFEE FILTER
20	VIT0000121	SCREW COUNT FLAT HEAD M3X8
21	GUA0000080	OR 4112 RED SILICONE LSR70
22	VIT0006513	RING 8
23	Z0250008215R1	BREWER CHAMBER
24	GUA0000065	OR 112 SILICON
25	Z0250008053	LOWER INLET CUP BUSH
26	Z0250008029	FUNNEL PIN
27/a	Z0250008108	LOWER FILTER SHAFT
27/b	Z0250008122	COFFEE FILTER LOW 36
28	Z0250008226	BEARING SUPPORT
29	Z0250008021	BEARING SHAFT
30	Z0250008022	BEARING
31	VIT0006517	RING 3.2
33	Z0250008033	FRONTAL GUIDE
34	Z0250008016	CAM RIGHT
35	Z0250008017	CAM LEFT
36	Z0250008036	COFFEE FUNNEL
37	VIT0004803	NUT M4
38	Z0250008035	SETTING PLATE
39	VIT0000032	SCREW HEAD TAP CAP M4X8
40	VIT0003309	WASHER4,3X16X1,5
41	VIT0005523	SCREW HEX HEAD REC TAP M4X60
42	VIT0004810	NUT M4
43	VIT0002461	SCREW HEAD TAP M4.2X26
44	Z0250008039CM	MICRO BREWER COVER-L.H RAL9006
44	Z0250008039IC	MICRO BREWER COVER-L.H RAL2011
45	Z0250008048	KEY FOR NUT
46	Z0250008110CL	§ WATER INLET PIPE

www.rheavendors.com tel: 0039 02 966 551 fax: 0039 02 96 55 086 email: rheavendors@rheavendors.com exclusive property of rheavendors group

heated micro coffee group		
47	Z0250008119	SPRING
48	VIT0003451	SPRING WASHER 4,2
50	Z0250008213R	§ HEATING ELEMENT
51	SCH0006880	HEATING ELEMENT BOARD
52	GUA0000061	OR 2010 VITON 80 BLACK
54	Z0250008076CL	§ COFFEE OUTLET PIPE
100	Z0250008220R	COFFEE BREWER MICRO D.36
101	Z0250008227R	§ BERING SUPPORT (Pos. 28-29-30-31)
102	Z0250008228R	§ LOW.COFFEE FILTER D.36+BEAR.

www.rheavendors.com tel: 0039 02 966 551 fax: 0039 02 96 55 086 email: rheavendors@rheavendors.com exclusive property of rheavendors group

coffee beans container

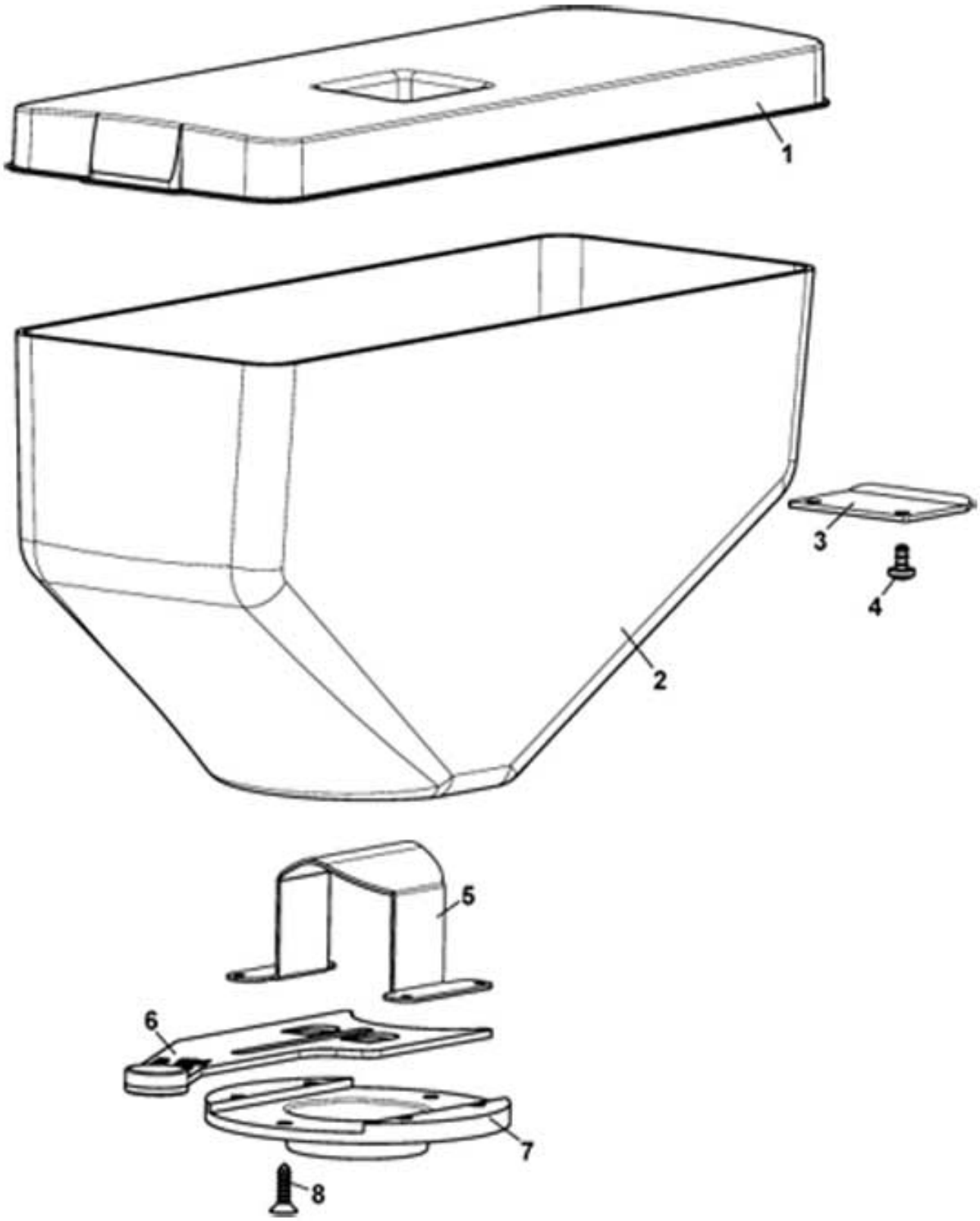

www.rheavendors.com tel: 0039 02 966 551 fax: 0039 02 96 55 086 email: rheavendors@rheavendors.com exclusive property of rheavendors group

coffee beans container		
Pos.	**Code**	**Description**
1	Z0230015217	COFFEE BEANS HOPPER LID
2	Z0230015213	COFFEE BEANS HOPPER
3	Z0230015212	COFFEE BEANS HOPPER HOOK
4	VIT0002009	SCREW ST HEAD CAP M3.5X6.5
5	Z0230015218	BEANS SWITCHING
6	Z0230015207IC	COFFEE BEANS HOPPER STOPPER
7	Z0230015215	COFFEE BEANS HOPPER STOPPER
8	VIT0002101	SCREW COUNT FLAT HEAD M3.5X13
100	Z0230015210CL	§ COFFEE BEANS HOPPER

www.rheavendors.com tel: 0039 02 966 551 fax: 0039 02 96 55 086 email: rheavendors@rheavendors.com exclusive property of rheavendors group

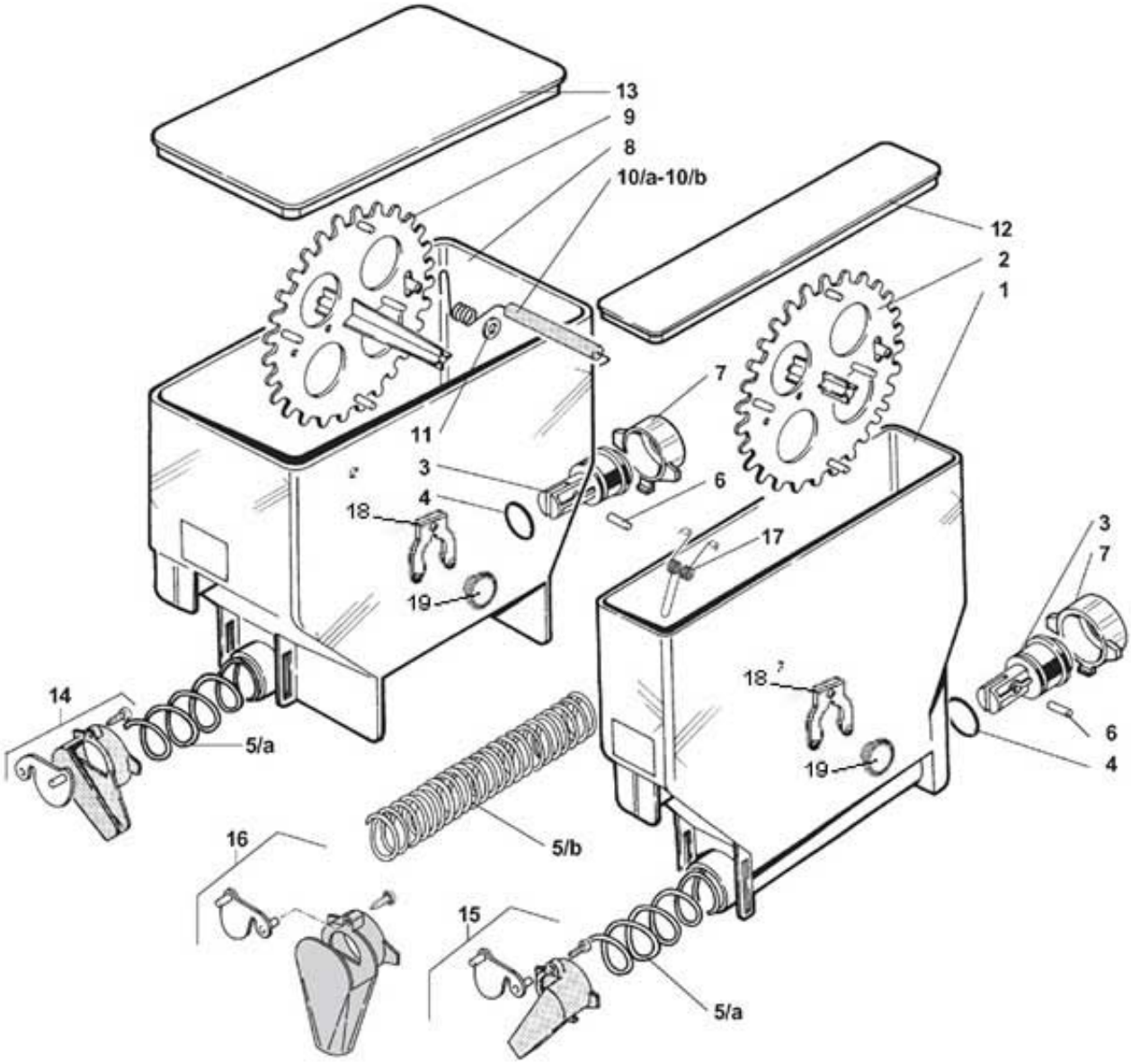

www.rheavendors.com tel: 0039 02 966 551 fax: 0039 02 96 55 086 email: rheavendors@rheavendors.com exclusive property of rheavendors group

product containers		
Pos.	**Code**	**Description**
1	Z0230030500	INGREDIENT CANISTER 54 190
2	Z0230030236AB	§ WHEEL MM54
3	Z0230030012	SPIRAL PIN
4	GUA0000083	OR 123 RED SILICONE A70
5/a	Z0230030014	SPIRAL 18
5/b	Z0230030013	SPIRAL 9
6	VIT0005106	PIN 2X14
7	Z0230030011	REAR BUSH
8	Z0230030520	INGREDIENT CANISTER 110-190
9	Z0230030237AB	§ WHEEL MM110
10/a	Z0230030064	AGITATOR 112 - RIGHT OUTLET
10/b	Z0230030062	AGITATOR 112 - LEFT OUTLET
11	VIT0003210	WASHER 8,4X16X1,6
12	Z0230030156	CANISTER 54 LID
13	Z0230030158	CANISTER 110 LID
14/a	Z0230030058R	§ INGRED. CHUTE-RIGHT ORANGE
14/b	Z0230030044R	§ INGREDIENT CHUTE-RIGHT RED
15/a	Z0230030057R	§ INGREDIENT CHUTE-LEFT ORANGE
15/b	Z0230030043R	§ INGREDIENT CHUTE-LEFT RED
16	Z0230030059R	§ INGRED. CHUTE-FRONTALORANGE
17	Z0230030060-05	PRODUCT AGITATOR
18	Z0230030239	WHEEL PIN FORK
19	Z0230030238-02	WHEEL PIN
100	Z0230030522R	§ CAN. 110-190 AGIT.18 W/LID-R
101	Z0230030525R	§ CAN. 110-190 AGIT.18 W/LID-L
102	Z0230030506R	§ CANIS. 54-190 WHEEL18 W/LID
103	Z0230030502R	§ CANIS. 54-190 WHEEL9 W/LID

www.rheavendors.com tel: 0039 02 966 551 fax: 0039 02 96 55 086 email: rheavendors@rheavendors.com exclusive property of rheavendors group

h2o tank H

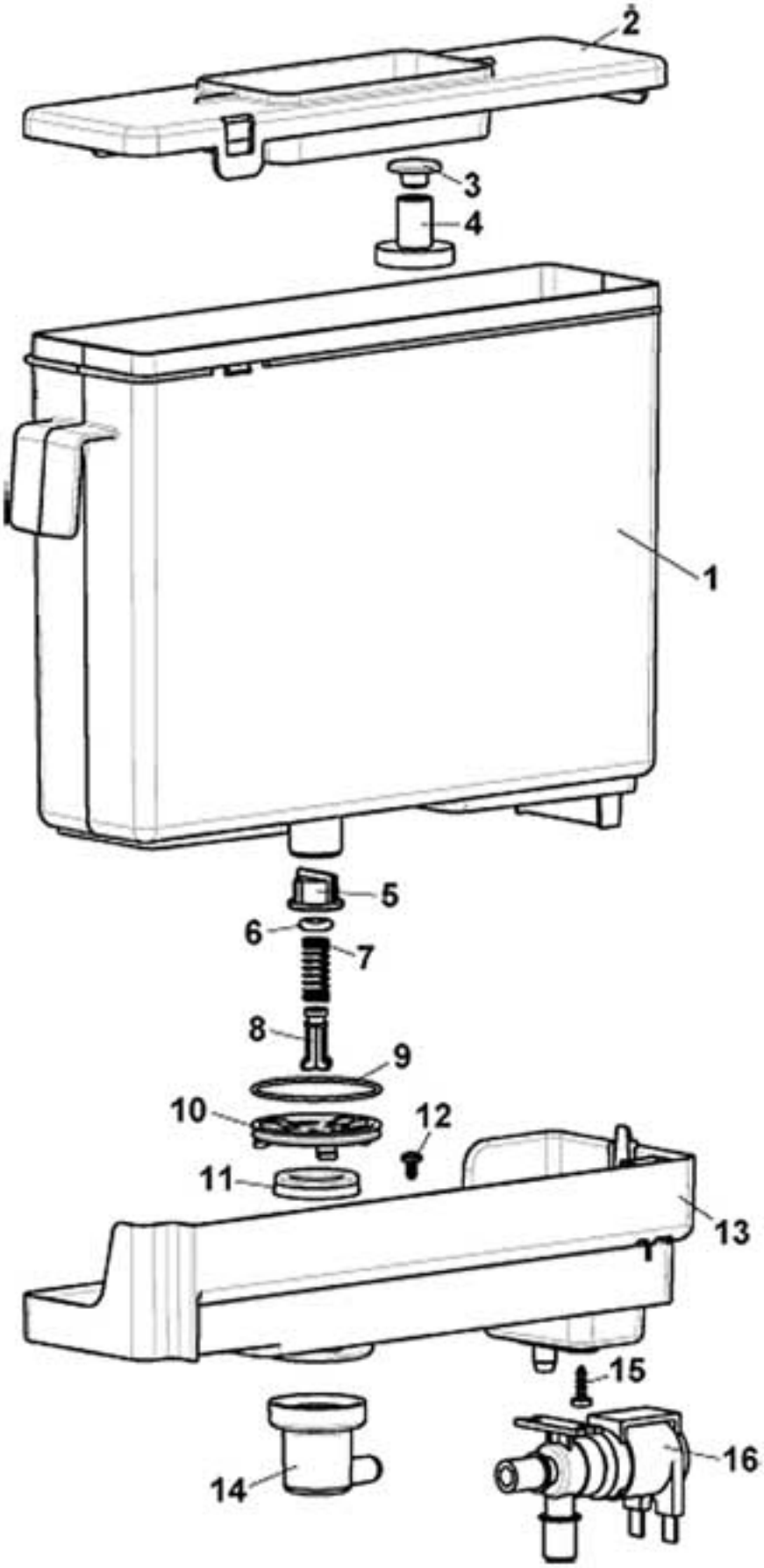

www.rheavendors.com tel: 0039 02 966 551 fax: 0039 02 96 55 086 email: rheavendors@rheavendors.com exclusive property of rheavendors group

h2o tank H		
Pos.	**Code**	**Description**
1	Z0800012506-03	H2O TANK
2	Z0800012507	H2O TANK LID
3	Z0020037045	WASTE FLOAT RAL 9005
4	Z0020037046	WASTE FLOAT RAL 3020
5	Z0110020011	FILTER
6	GUA0000082	SILICON GASKET D.6
7	Z0800012012	PIN SPRING
8	Z0800012009	WATER TANK CLOSING PIN
9	GUA0000046	OR 2137
10	Z0800012515NA	RING GASKET BLACK
11	GUA0002100	SILICON GASKET
12	VIT0002015	SCREW ST HEAD CAP M3.5X9.5
13	Z0800012511	H2O TANK HOLDER
14	Z0800012512	WATER TANK ELBOW CONNECTOR
15	VIT0002469	SCREW HEAD TAP M3.5X10
16	Z0110001103	VALVE 2W 24V DC
100	Z0800012500CL	§ WATER TANK Pos.1+2 from pos.4 to pos. 8
101	Z0800012511CL	§ WATER TANK SUPPORT Pos.9+11 from pos.13 to pos. 16

www.rheavendors.com tel: 0039 02 966 551 fax: 0039 02 96 55 086 email: rheavendors@rheavendors.com exclusive property of rheavendors group

h2o tank E

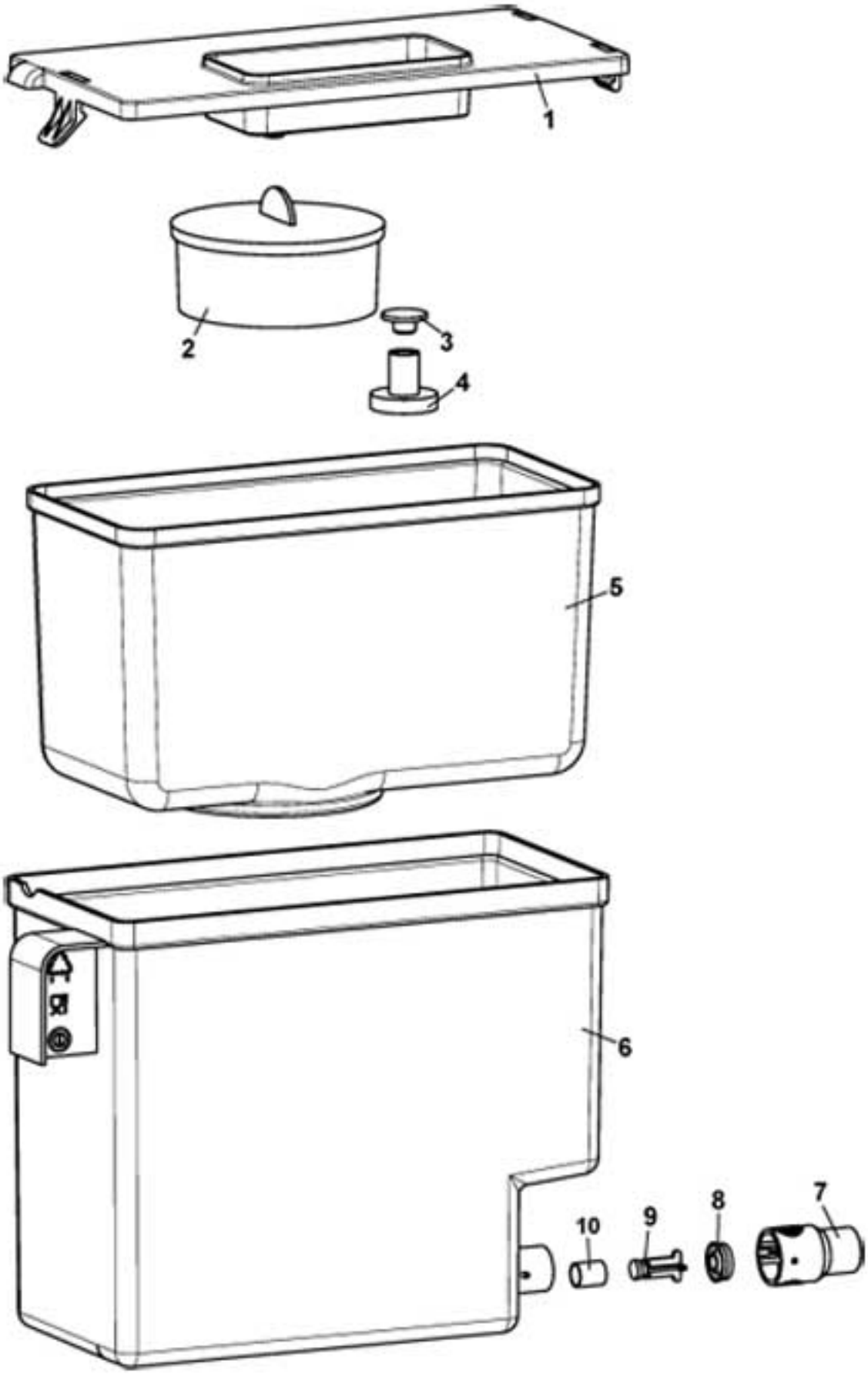

www.rheavendors.com tel: 0039 02 966 551 fax: 0039 02 96 55 086 email: rheavendors@rheavendors.com exclusive property of rheavendors group

h2o tank E		
Pos.	**Code**	**Description**
1	Z0800012025CK	H2O TANK LID RAL 7037
2	Z0060001010	BRITA AQUAAROMA 180/200 FILTER
3	Z0020037045	WASTE FLOAT RAL 9005
4	Z0020037046	WASTE FLOAT RAL 3020
5	Z0800012018	BRITA FILTER SUPPORT
6	Z0800012005PF	WATER TANK
7	Z0800012008	TANK HOLDER
8	GUA0002008	SILICON GASKET DE 062
9	Z0800012009	WATER TANK CLOSING PIN
10	Z0800012012	PIN SPRING
100	Z0800012020R	ADAPTOR W/H2O BRITA FILTER KIT Pos.2+5
101	Z0800012026R	WATER TANK ASSEMBLED + COVER

www.rheavendors.com tel: 0039 02 966 551 fax: 0039 02 96 55 086 email: rheavendors@rheavendors.com exclusive property of rheavendors group

Thermofuse boiler

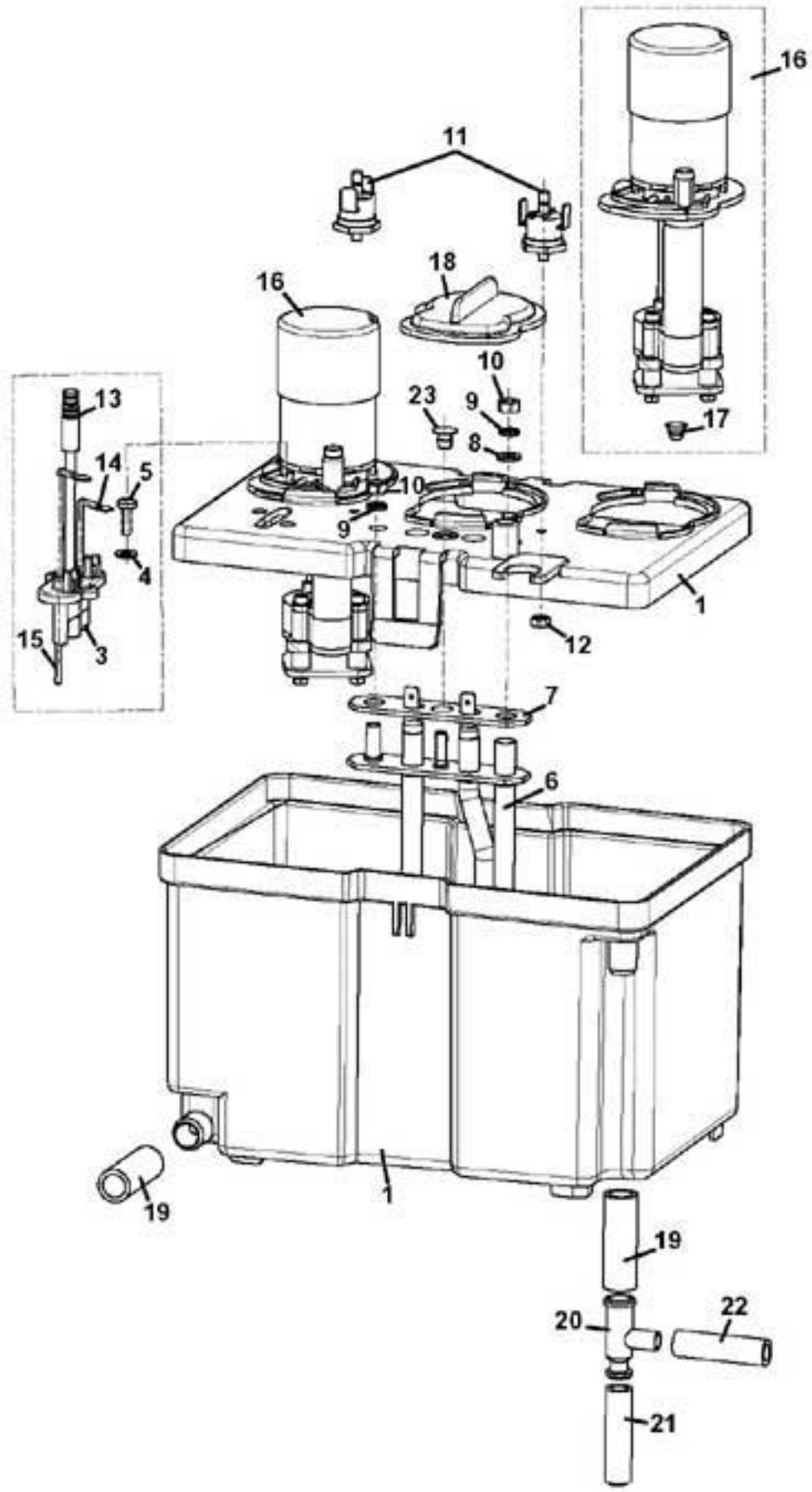

www.rheavendors.com tel: 0039 02 966 551 fax: 0039 02 96 55 086 email: rheavendors@rheavendors.com exclusive property of rheavendors group

Thermofuse boiler		
Pos.	**Code**	**Description**
22/B		
1	Z0600016401R	§ TANK+BOILER COVER
3	Z0600016089	PROBE SUPPORT
4	VIT0003211	WASHER 4,3X9X0,8
5	VIT0001005	SCREW HEAD TAP CAP M4X12
6	Z0600016137R	§ HEATING ELEMENT 1300W 230V
7	Z0600016084	HEATING ELEMENT GASKET
8	VIT0003203	WASHER 5,3X10X1
9	VIT0003111	SPRING WASHER 5,3
10	VIT0004804	NUT M5
11	ELE0000965	CLIXSON 88°
12	VIT0004816	NUT M4
13	ELE0000963R	§ TEMPERATURE PROBE+SENSOR
14	Z0600016054	MAXIMUM LEVEL PROBE
15	VIT0002469	SCREW HEAD TAP M3.5X10
15	Z0600016053	MINIMUM LEVEL PROBE
16	Z0600016405R	§ BOILER PUMP
17	Z0080100102	MIXER SHAFT GASKET
18	Z0600016422	PUMP LID
19/a	TSIL10/14T-10	SILICON HOSE 10X14 MT.10
19/b	TSIL10/14T-50	SILICON HOSE 10X14 MT.50
20	Z0600016028	T CONNECTOR
21/a	TSIL06/11T-10	SILICON HOSE 6X11 MT.10
21/b	TSIL06/11T-50	SILICON HOSE 6X11 MT.50
22/a	TSIL06/09T-10	SILICON HOSE 6X9 MT.10
22/b	TSIL06/09T-50	SILICON HOSE 6X9 MT.50
23	Z0230030154	PLUG
100	Z0600016400CL1	§ BOILER 230V
101	Z0600016420CL1	§ BOILER 3PUMP 230V

www.rheavendors.com tel: 0039 02 966 551 fax: 0039 02 96 55 086 email: rheavendors@rheavendors.com exclusive property of rheavendors group

ESPRESSO BOILER STAINLESS STEEL 400CC

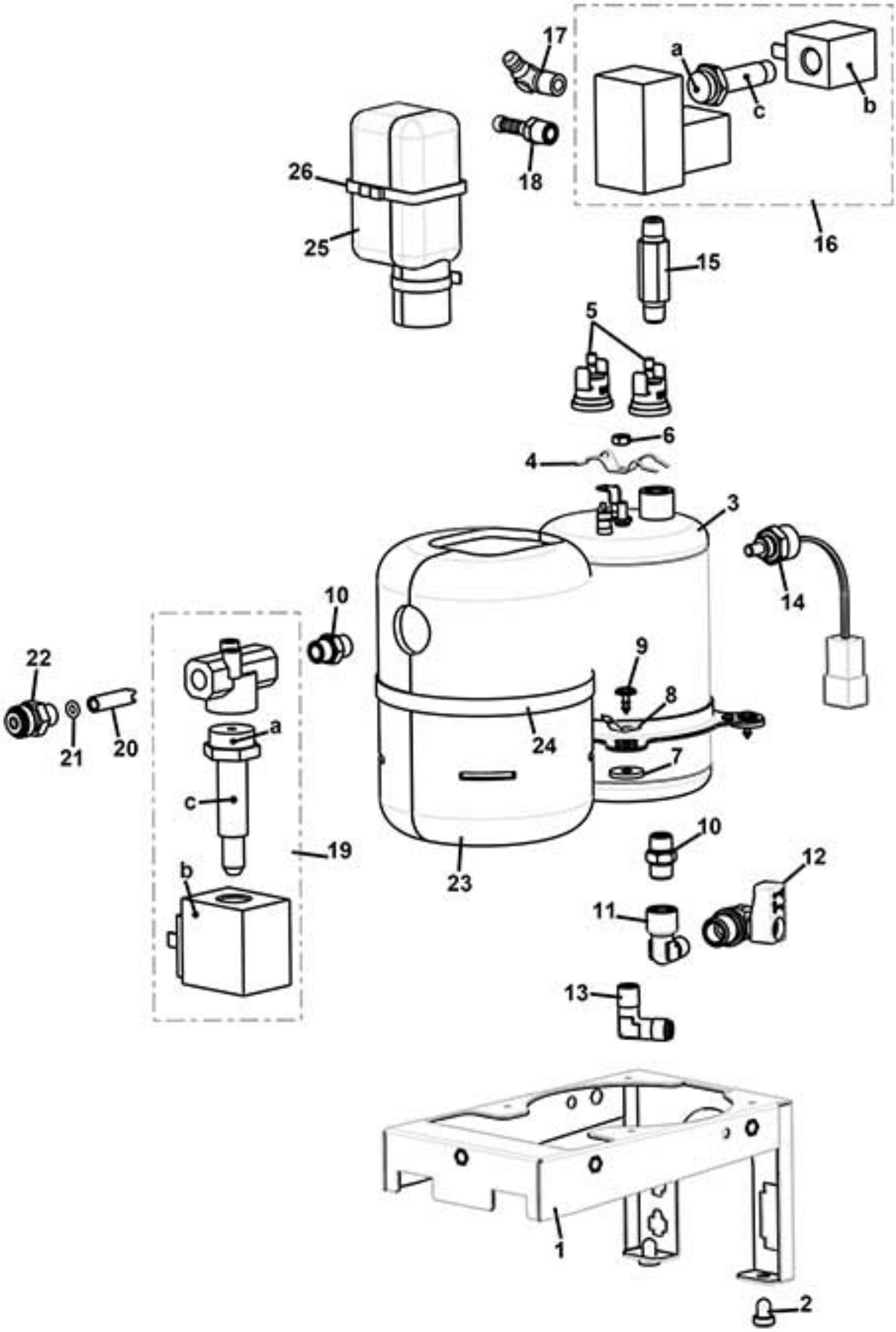

www.rheavendors.com tel: 0039 02 966 551 fax: 0039 02 96 55 086 email: rheavendors@rheavendors.com exclusive property of rheavendors group

ESPRESSO BOILER STAINLESS STEEL 400CC		
Pos.	**Code**	**Description**
1	Z0600019720NA	INOX BOILER SUPPORT
2	Z0020018061	SELECTION BUTTON PLUG
3	Z0600019701CL	§ BOILER 1500 W 230V 400 CC From pos.3 to pos. 6 (for verson 230V) from serial 20174100000
4	Z0600019188	THERMOSTAT CLIP
5	ELE0000982	CLIXSON 127°
6	VIT0004826	NUT M4X0,7
7	1600001098	RUBBER SPACER D. 4,5
8	Z0600019012	GROUND WIRING
9	VIT0002401	SCREW ST HEAD CAP M3.5X9.5
10	Z0100001084	NIPPLE 1/8
11	Z0100001085	ELBOW CONNECTOR
12	Z0600019017	TAP M/F 1/8
13	Z0100001019	ELBOW CONNECTOR SO2400-6-1/8
14	ELE0000975	PROBE
15	Z0110001220	STRAIGHT CONNECTOR MM 1/8 GC
16	Z0110001111	VALVE BLOCK.2 2W 24V DC 7W before order pls check ORING color of the sleeve
16/a	Z0110010138	SLEEVE D.13,9+WHITE OR
16/a	Z0110010148	SLEEVE D.14,9+GREEN OR
16/b	Z0110010135	COIL 7W 24V DC
16/c	Z0110010136	CORE+SPRING
17	Z0100001102	CONNECTOR 1/8"-Ø7,2 90°
18	Z0100001112	RUBBER HOLDER
19	Z0110001072	VALVE 3W 1/8 24DC O
19/a		
19/b	Z0110010065	COIL 8 W 24 DC
19/c		COMPONENT NO MORE SELLING
20	Z0110003122	SPACER OR
21	GUA0000069	OR 2015 VITON 80 BLACK
22	Z0110003121	STRAIGHT CONNECTOR
23	Z0600019195	INSULATION SHELL
24	FSC0000214	
25	Z0600019197	EV HOUSING INSULATION
26	FASC000215	PLASTIC CLIP BLACK 2,6X200
100	Z0600019769CL	§STEEL BOILER 2+1 VALVE 230V From pos. 1 to pos. 26 (for Version 230V) from serial 0 Up to serial 20174099999
101	Z0600019769CL1	§INOX BOILER 2+1VALVE XXOC100V From pos. 1 to pos. 26 (for Version 100V) Up to serial 20174099999
102	Z0600019769CL2	§STEEL BOILER 2+1VALVE 120V From pos. 1 to pos. 26 (for Version 120V) Up to serial 20174099999

www.rheavendors.com tel: 0039 02 966 551 fax: 0039 02 96 55 086 email: rheavendors@rheavendors.com exclusive property of rheavendors group

VIBRATION PUMP M.S. (to serial number 52069999)

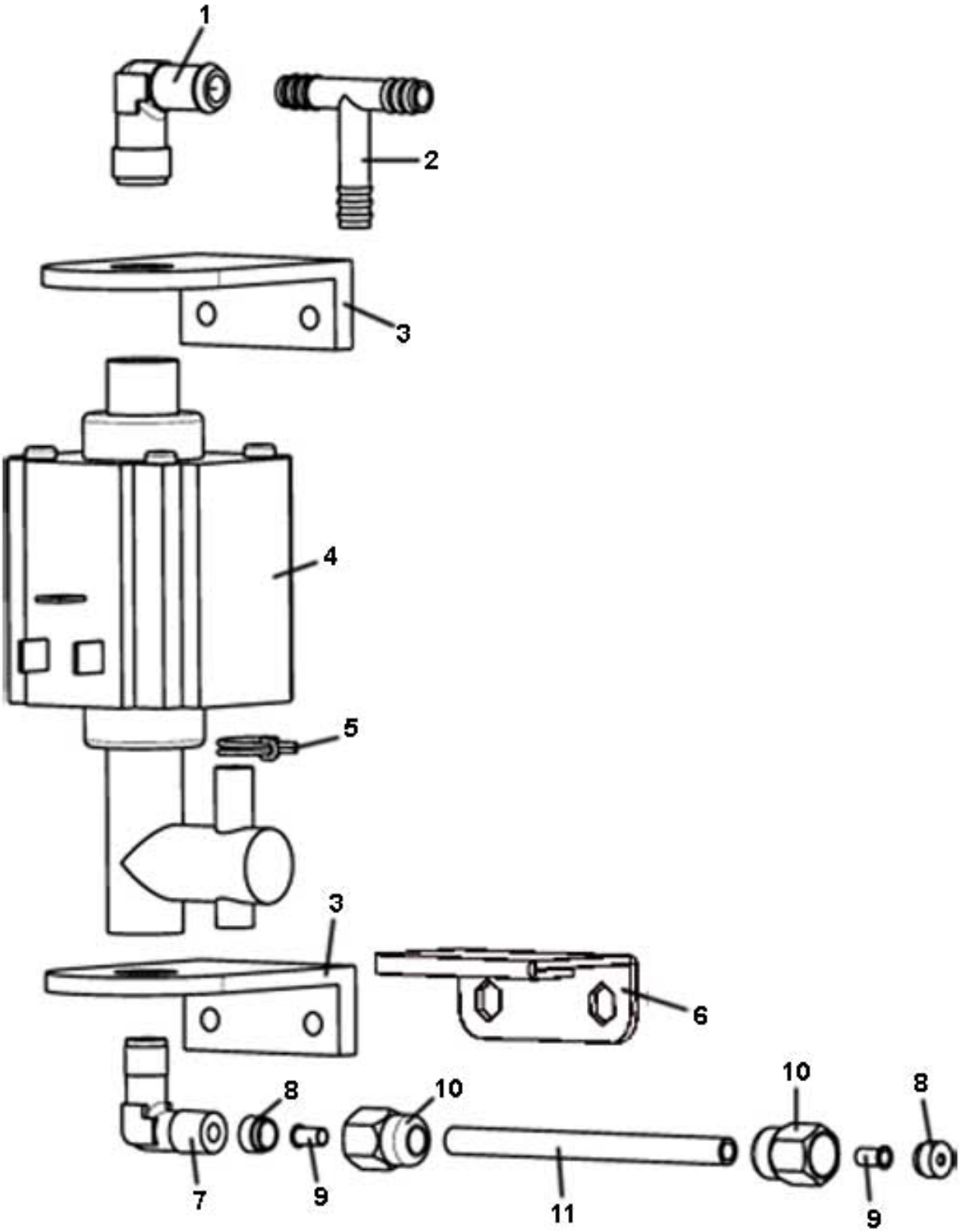

www.rheavendors.com tel: 0039 02 966 551 fax: 0039 02 96 55 086 email: rheavendors@rheavendors.com exclusive property of rheavendors group

VIBRATION PUMP M.S. (to serial number 52069999)		
Pos.	**Code**	**Description**
1	820001039	CONNECTOR 2400-8-1/8
2	Z0100003022	T CONNECTOR 461 TS UL
3	Z0220001002	PUMP SUPPORT
4		COMPONENT NO MORE SELLING
5	FASC000110	CLAMP
6		COMPONENT NO MORE SELLING
7	Z0100001019	ELBOW CONNECTOR SO2400-6-1/8
8	Z0100002002	LOCKING RING SO1-6
9	Z0100002005	NUT D.4
10	Z0100001002	CONNECTOR NUT
11	TTEF04/06T	PTFE PIPE 4X6

www.rheavendors.com tel: 0039 02 966 551 fax: 0039 02 96 55 086 email: rheavendors@rheavendors.com exclusive property of rheavendors group

VIBRATION PUMP M.S. (from serial number 01070001)

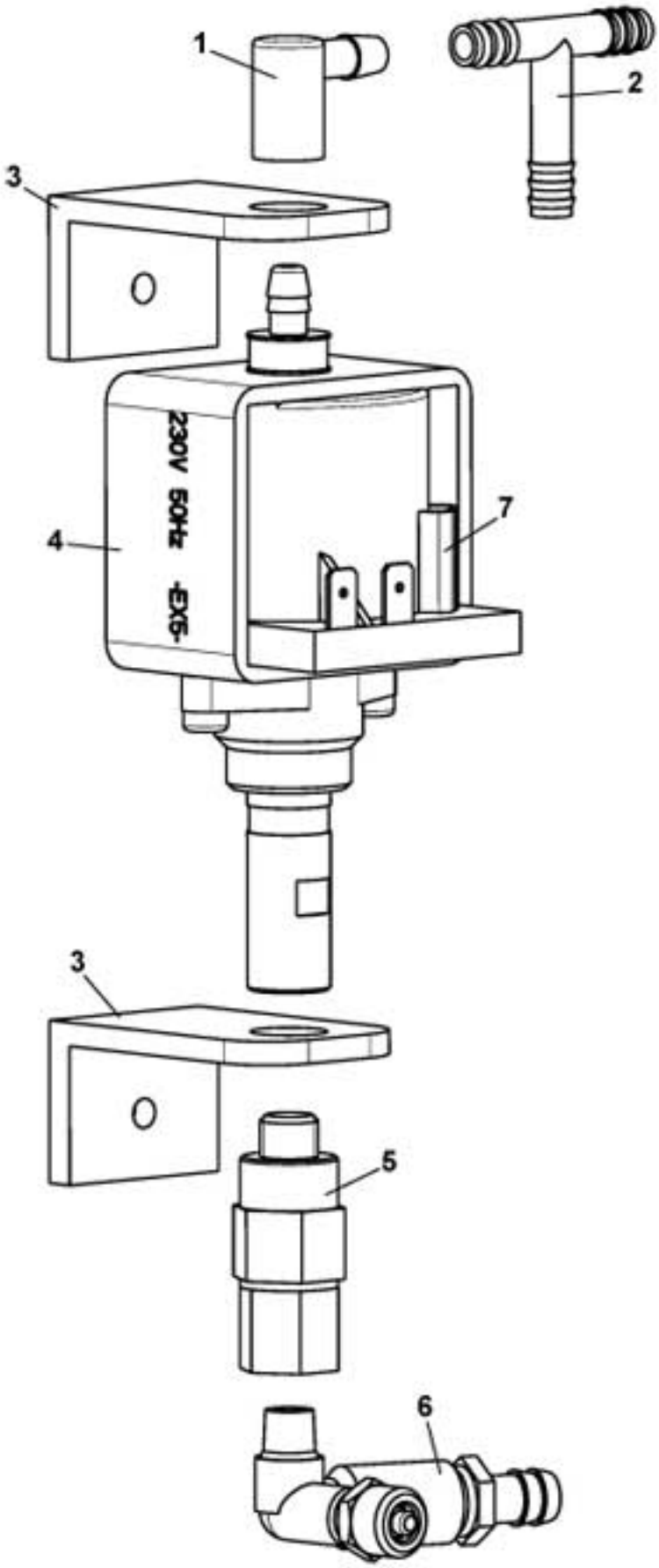

www.rheavendors.com tel: 0039 02 966 551 fax: 0039 02 96 55 086 email: rheavendors@rheavendors.com exclusive property of rheavendors group

VIBRATION PUMP M.S. (from serial number 01070001)		
Pos.	**Code**	**Description**
1	Z0110004023	CONNECTOR
2	Z0100003022	T CONNECTOR 461 TS UL
3	Z0110004022	SUPPORT
4/a	Z0110004041	PUMP EX5 230V-50HZ
4/b	Z0110004042	PUMP EX5 220V 50-60HZ For version 220V
5	Z0110002012R	§ SAFETY VALVE E:1/8M O:1/8F
6	Z0110004070	BY PASS VALVE 11 BAR
7	ELE0000915	PUMP THERMOPROTECTOR
100	Z0110004041CL3	§ PUMP EX5 230VAC+BY PASS 11

www.rheavendors.com tel: 0039 02 966 551 fax: 0039 02 96 55 086 email: rheavendors@rheavendors.com exclusive property of rheavendors group

VIBRATION PUMP M.M. (to serial number 52069999)

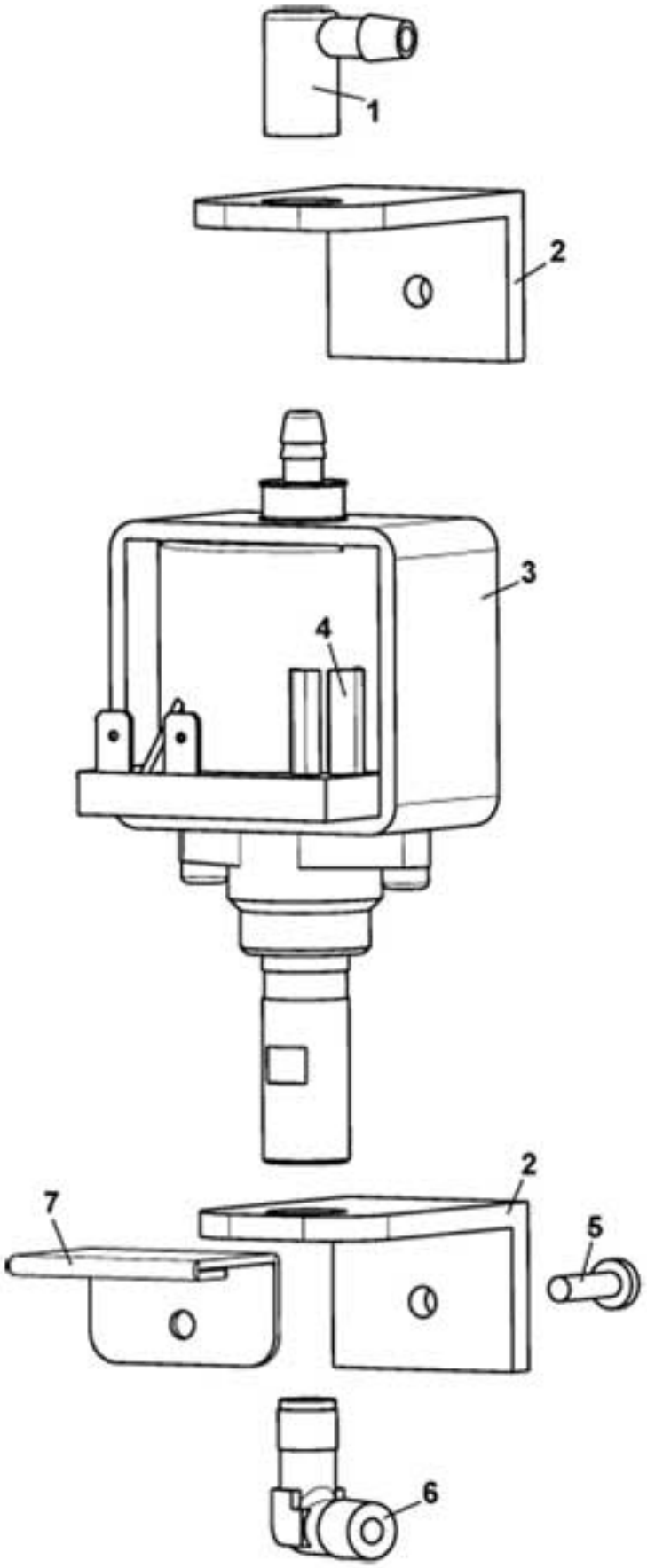

www.rheavendors.com tel: 0039 02 966 551 fax: 0039 02 96 55 086 email: rheavendors@rheavendors.com exclusive property of rheavendors group

VIBRATION PUMP M.M. (to serial number 52069999)		
Pos.	**Code**	**Description**
1	Z0110004023	CONNECTOR
2	Z0110004022	SUPPORT
3	Z0110004041CLB	§ PUMP EX5 230VAC+BY PASS 80
4	ELE0000915	PUMP THERMOPROTECTOR
5	VIT0000014	SCREW HEAD TAP CAP M4X16
6	Z0100001019	ELBOW CONNECTOR SO2400-6-1/8
7	Z0010027223	PUMP SUPPORT BRACKET

www.rheavendors.com tel: 0039 02 966 551 fax: 0039 02 96 55 086 email: rheavendors@rheavendors.com exclusive property of rheavendors group

VIBRATION PUMP M.M. (from serial number 01070001)

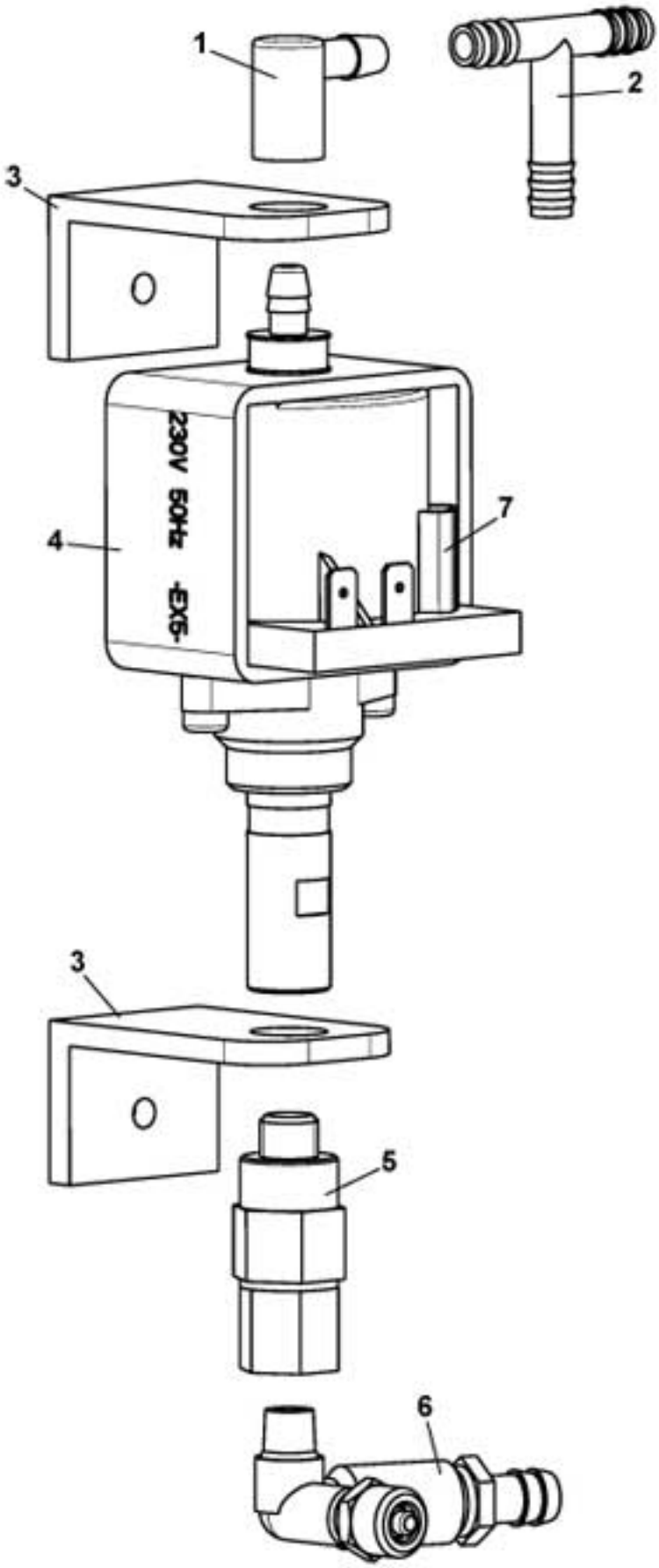

www.rheavendors.com tel: 0039 02 966 551 fax: 0039 02 96 55 086 email: rheavendors@rheavendors.com exclusive property of rheavendors group

VIBRATION PUMP M.M. (from serial number 01070001)		
Pos.	**Code**	**Description**
1	Z0110004023	CONNECTOR
2	Z0100003022	T CONNECTOR 461 TS UL
3	Z0110004022	SUPPORT
4/a	Z0110004041	PUMP EX5 230V-50HZ
4/b	Z0110004042	PUMP EX5 220V 50-60HZ For version 220V
5	Z0110002012R	§ SAFETY VALVE E:1/8M O:1/8F
6	Z0110004060	BY PASS VALVE 8 BAR
7	ELE0000915	PUMP THERMOPROTECTOR

www.rheavendors.com tel: 0039 02 966 551 fax: 0039 02 96 55 086 email: rheavendors@rheavendors.com exclusive property of rheavendors group

water inlet panel A.A. support

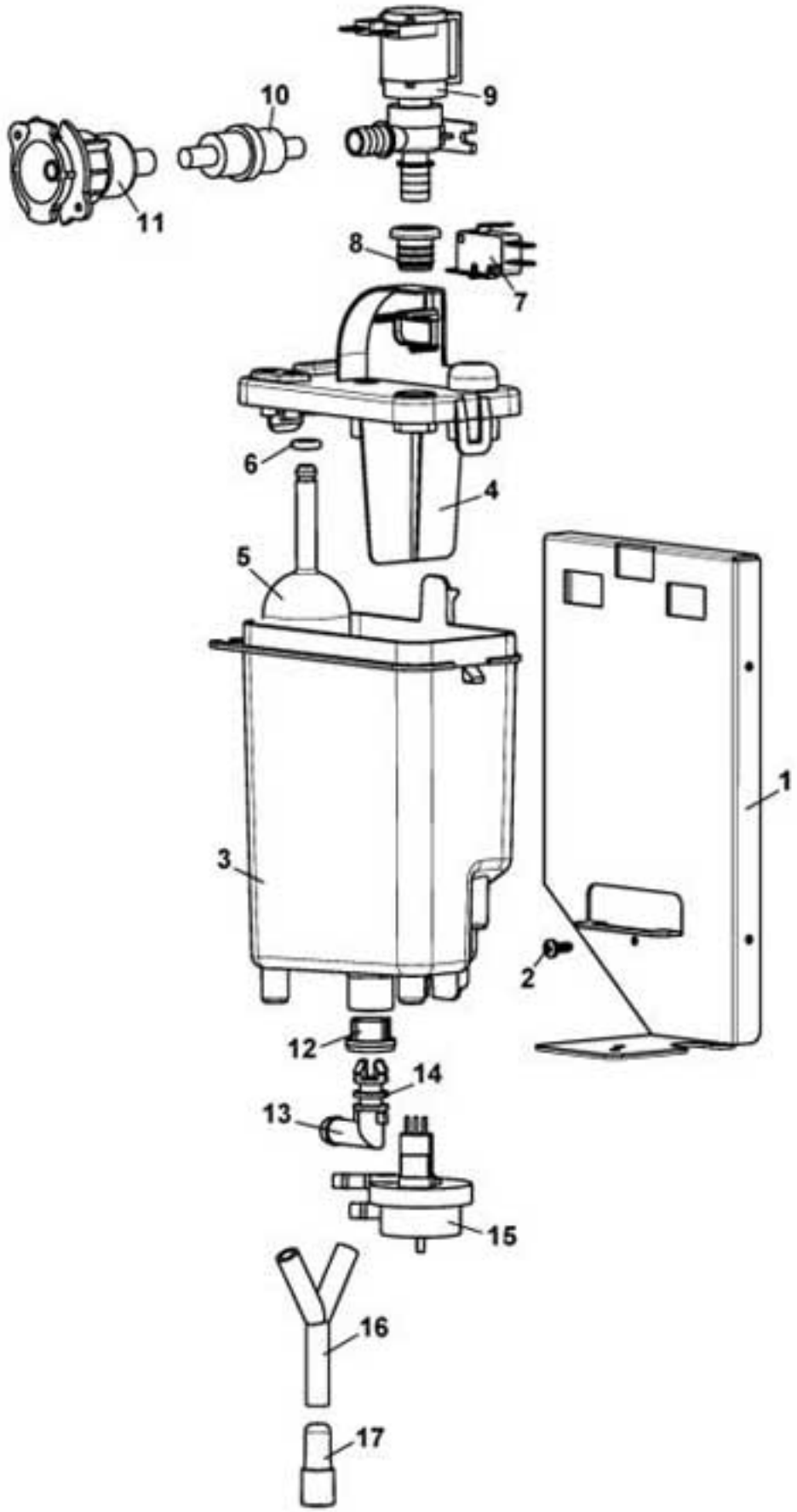

www.rheavendors.com tel: 0039 02 966 551 fax: 0039 02 96 55 086 email: rheavendors@rheavendors.com exclusive property of rheavendors group

water inlet panel A.A. support		
Pos.	**Code**	**Description**
1	Z0010027244-05	AIR BREAK HOLDER BRACKET
2	VIT0002010	SCREW ST HEAD CAP M3.5X9.5
3	Z0800013041	AIR BREAK TANK
4	Z0800013043	AIR BREAK COVER
5	Z0800013046	AIR BREAK WASTE FLOAT
6	GUA0000082	SILICON GASKET D.6
7	ELE0001514	MICROSWITCH 3A 125-250VA
8	Z0800013051	VALVE GASKET
9	Z0110001103	VALVE 2W 24V DC
10	Z0109002002	H2O FILTER
11	Z0800012015	WATER TANK CONNECTOR
12	Z0110020007	PLASTIC FILTER DIAM. 20
13	Z0800009211	ELBOW CONNECTOR
14	GUA0000043	OR 109 NBR AL 75 BLACK
15	Z0110007003	VOLUMETRIC COUNTER
16	Z0100001065	CONNECTOR "Y"
17	650001057	DRAINER PLUG
100	Z0010027243CL	§ UNPLUMBED AIR BREAK

www.rheavendors.com tel: 0039 02 966 551 fax: 0039 02 96 55 086 email: rheavendors@rheavendors.com exclusive property of rheavendors group

water inlet panel A.R. support

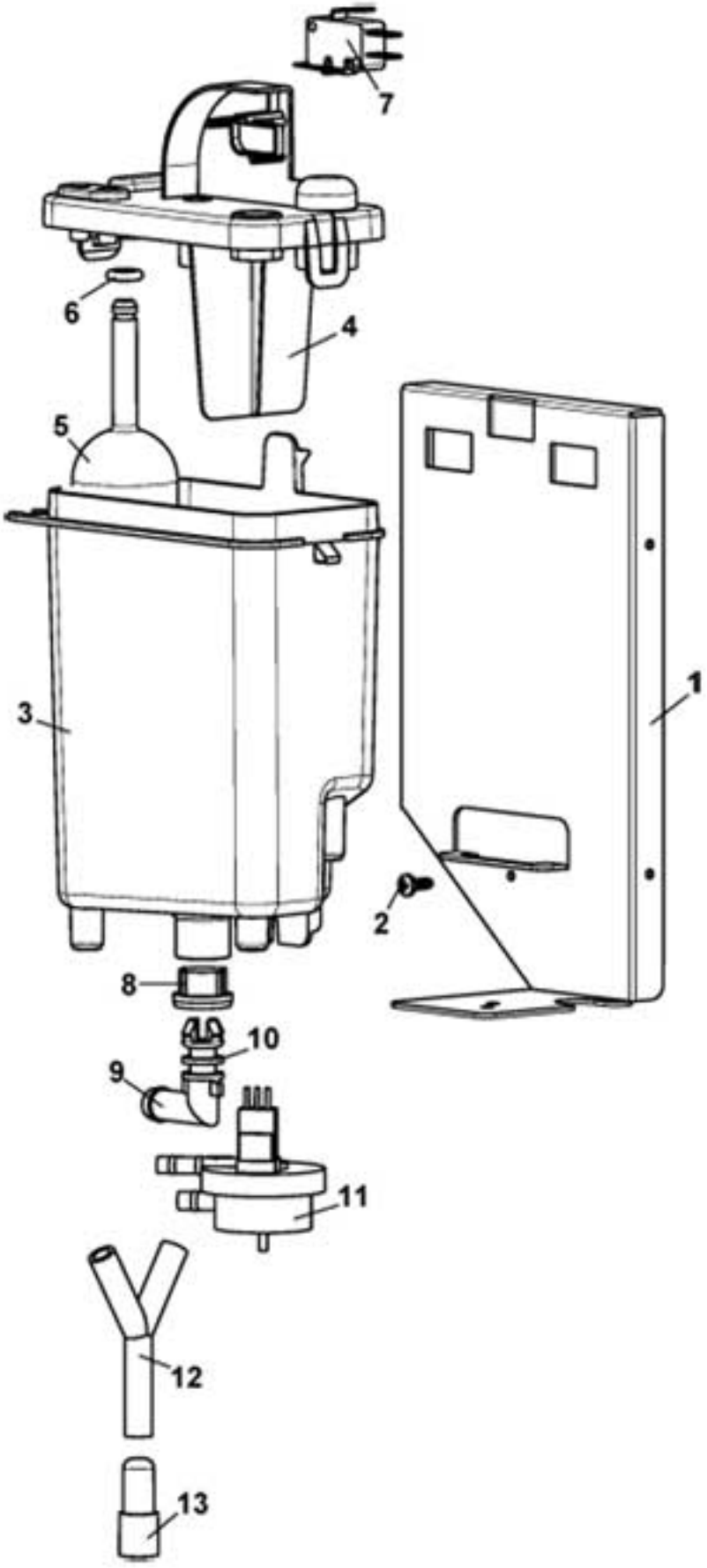

www.rheavendors.com tel: 0039 02 966 551 fax: 0039 02 96 55 086 email: rheavendors@rheavendors.com exclusive property of rheavendors group

water inlet panel A.R. support		
Pos.	**Code**	**Description**
1	Z0010027244-05	AIR BREAK HOLDER BRACKET
2	VIT0002010	SCREW ST HEAD CAP M3.5X9.5
3	Z0800013041	AIR BREAK TANK
4	Z0800013043	AIR BREAK COVER
5	Z0800013046	AIR BREAK WASTE FLOAT
6	GUA0000082	SILICON GASKET D.6
7	ELE0001514	MICROSWITCH 3A 125-250VA
8	Z0110020007	PLASTIC FILTER DIAM. 20
9	Z0800009211	ELBOW CONNECTOR
10	GUA0000043	OR 109 NBR AL 75 BLACK
11	Z0110007003	VOLUMETRIC COUNTER
12	Z0100001065	CONNECTOR "Y"
13	650001057	DRAINER PLUG
100	Z0010027243CL1	§ PLUMBED AIR BREAK

www.rheavendors.com tel: 0039 02 966 551 fax: 0039 02 96 55 086 email: rheavendors@rheavendors.com exclusive property of rheavendors group

control and power logic

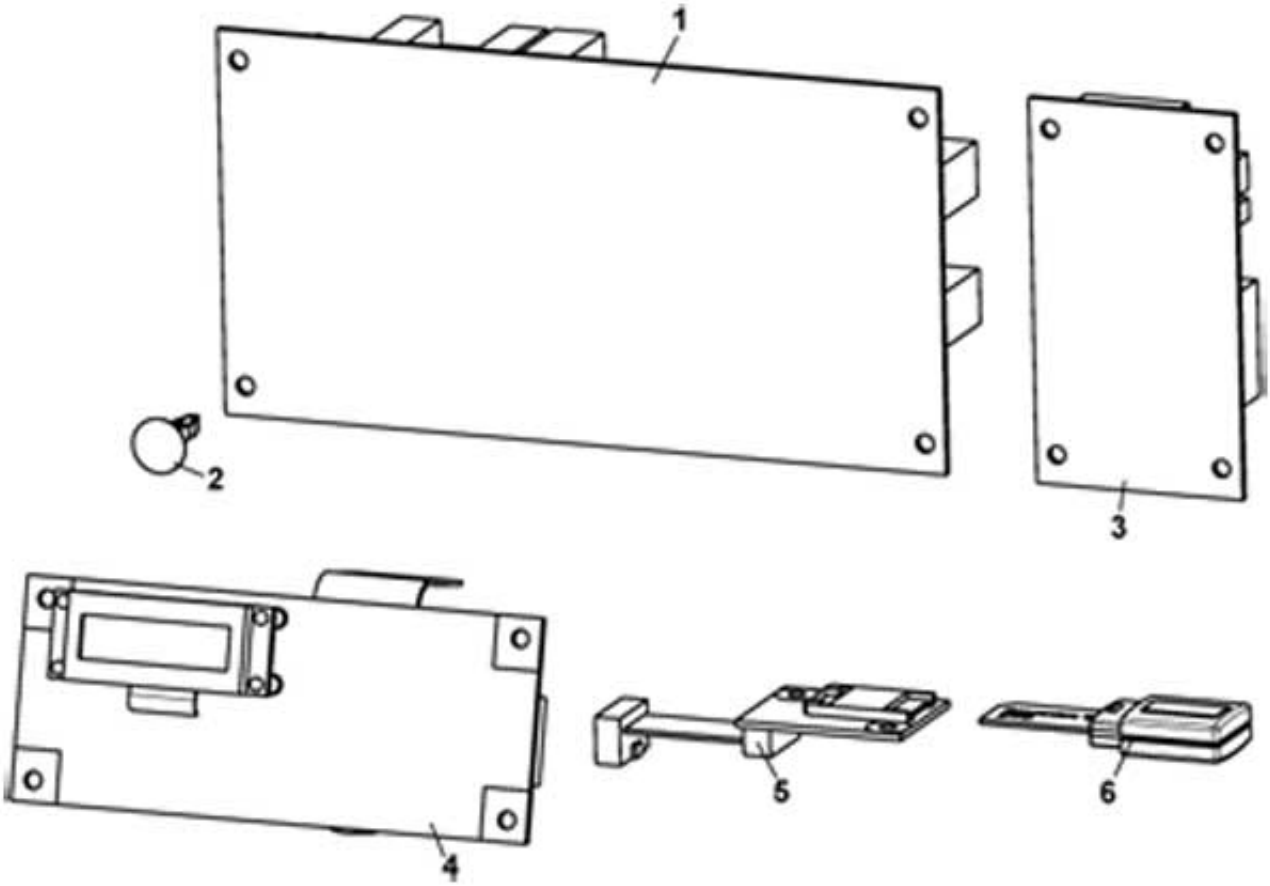

www.rheavendors.com tel: 0039 02 966 551 fax: 0039 02 96 55 086 email: rheavendors@rheavendors.com exclusive property of rheavendors group

control and power logic		
Pos.	**Code**	**Description**
1	SCH0008042-01	CPU/POWER BOARD
2	ELE0062020	BOARD SUPPORT
3	SCH0006620	CPU BOARD
4	SCH0007640	DISPLAY BOARD
5	SCH0005860	FLASH BOARD
6	Z0020040310CL/2	RHEA FLASH MEMORY(RED)

www.rheavendors.com tel: 0039 02 966 551 fax: 0039 02 96 55 086 email: rheavendors@rheavendors.com exclusive property of rheavendors group

BRITA FILTER

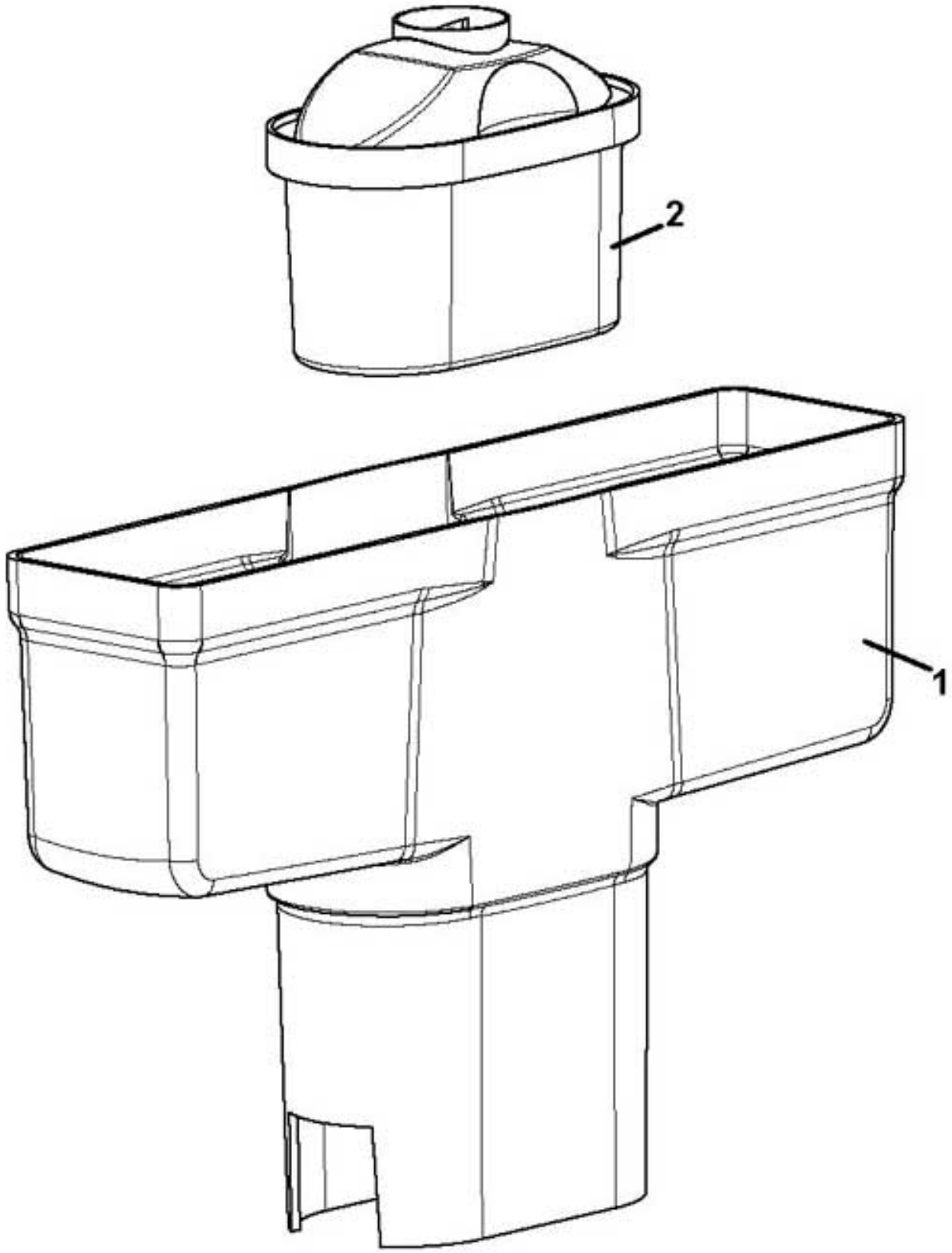

www.rheavendors.com tel: 0039 02 966 551 fax: 0039 02 96 55 086 email: rheavendors@rheavendors.com exclusive property of rheavendors group

BRITA FILTER		
Pos.	**Code**	**Description**
1	Z0800012522	BRITA MAXTRA 2020 FILTER SUPP.
2	Z0060001014	BRITA FILTER MAXTRA +
3	Z0800012513R1	ADAPTOR W/MAXT BRITA+FLTER KIT (Pos.1 + 2)

www.rheavendors.com tel: 0039 02 966 551 fax: 0039 02 96 55 086 email: rheavendors@rheavendors.com exclusive property of rheavendors group