vending machine

s manual

www.rheavendors.com tel: 0039 02 966 551 fax: 0039 02 96 55 086 email: rheavendors@rheavendors.com exclusive property of rheavendors group

cabinet (Unplumbed version)

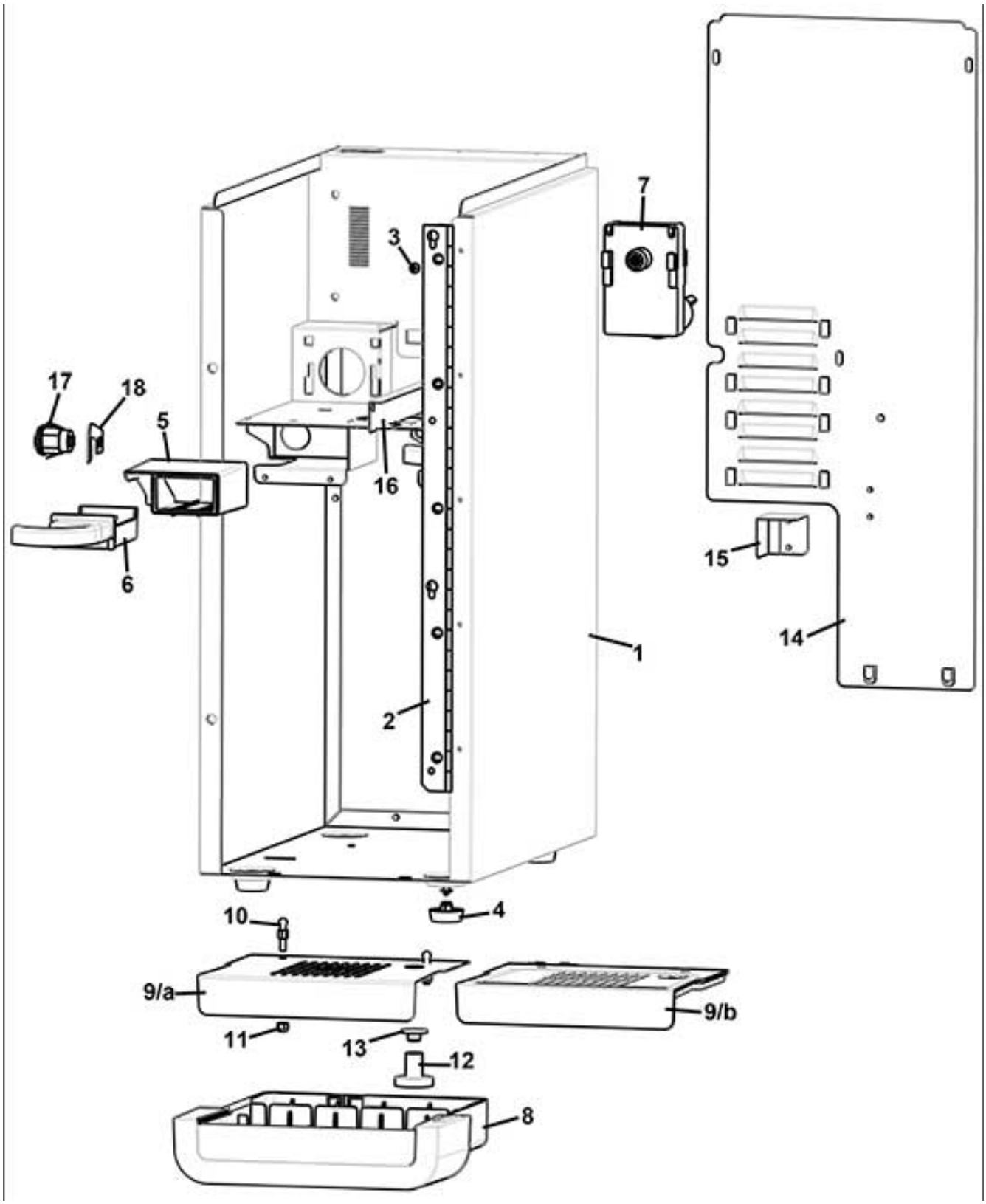

www.rheavendors.com tel: 0039 02 966 551 fax: 0039 02 96 55 086 email: rheavendors@rheavendors.com exclusive property of rheavendors group

cabinet (Unplumbed version)		
Pos.	**Code**	**Description**
1	Z0010025155CMR	CABINET + PACKAGE
2	Z0010028829	HINGE D.4X270 ALA 15
3	VIT0002009	SCREW ST HEAD CAP M3.5X6.5
4	GUA0011011	MACHINE FOOT D.25
5	Z0010027214	TRAP DRAWER
6	Z0010027022	TRAP DRAWER REMOVABLE
7	Z0090002113	MOTOR 24 DC 97 RPM
8	Z0010025181NA	H2O DRIP TRAY BLACK
9/a	Z0010025183	H2O DRIP TRAY GRID INOX
9/b	Z0010025182NA	H2O DRIP TRAY GRID BLACK
10	VIT0009151	PIN M4
11	VIT0004810	NUT M4
12	Z0020037046	WASTE FLOAT RAL 3020
13	Z0020037045	WASTE FLOAT RAL 9005
14	Z0010025168CM	REAR DOOR RAL9006
15	Z0010027068	BOILER BRACKET
16	Z0010024674-02NA	WIRING SUPPORT (BLACK)
17	SER0000020	LOCK MM20 C.3425
18	Z0020035615	LOCK BRACKET

www.rheavendors.com tel: 0039 02 966 551 fax: 0039 02 96 55 086 email: rheavendors@rheavendors.com exclusive property of rheavendors group

cabinet (Plumbed version)

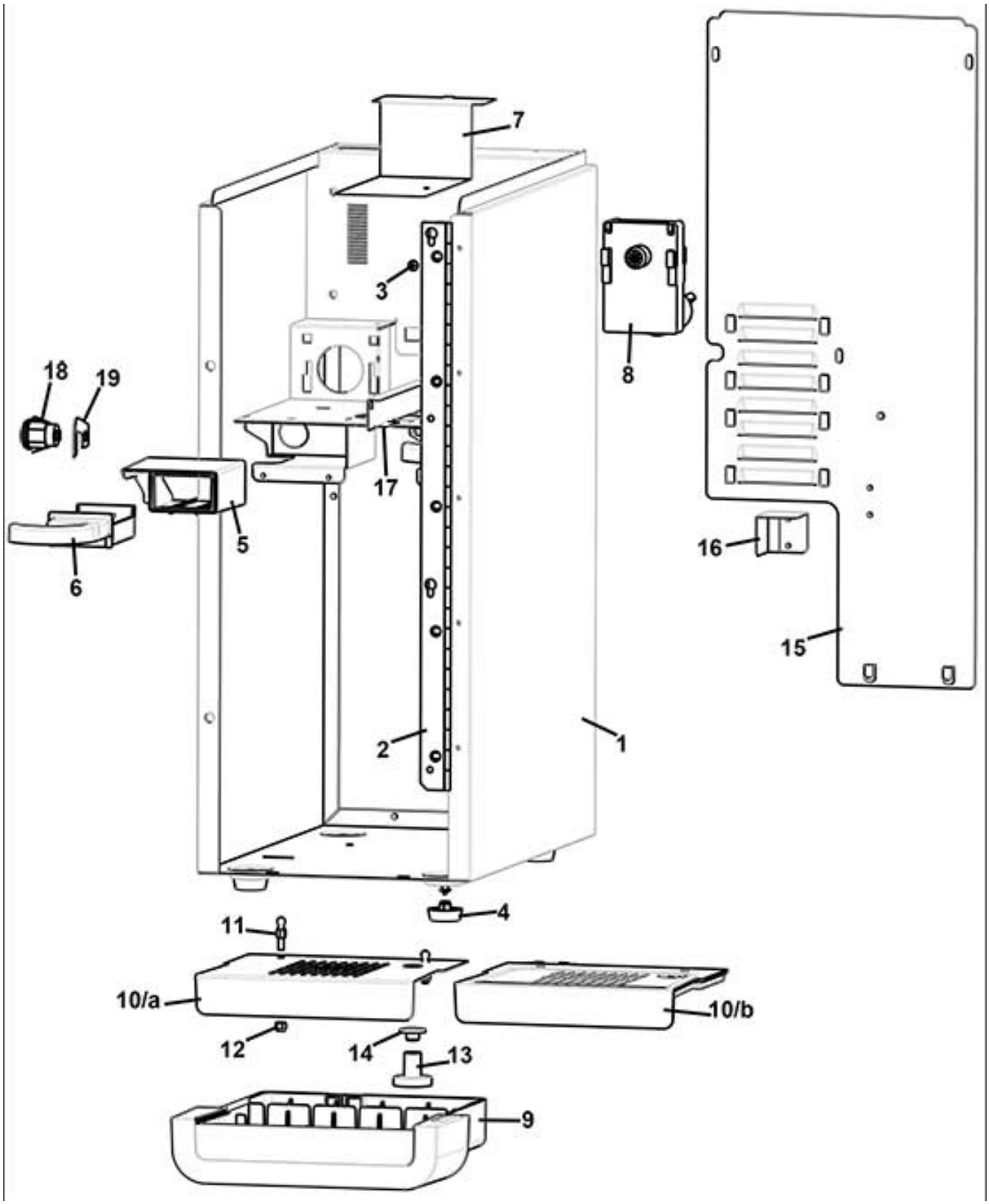

www.rheavendors.com tel: 0039 02 966 551 fax: 0039 02 96 55 086 email: rheavendors@rheavendors.com exclusive property of rheavendors group

cabinet (Plumbed version)		
Pos.	**Code**	**Description**
1	Z0010025155CMR	CABINET + PACKAGE
2	Z0010028829	HINGE D.4X270 ALA 15
3	VIT0002009	SCREW ST HEAD CAP M3.5X6.5
4	GUA0011011	MACHINE FOOT D.25
5	Z0010027214	TRAP DRAWER
6	Z0010027022	TRAP DRAWER REMOVABLE
7	Z0010025163CM	WATER TANK CLOSING PLATE
8	Z0090002113	MOTOR 24 DC 97 RPM
9	Z0010025181NA	H2O DRIP TRAY BLACK
10/a	Z0010025183	H2O DRIP TRAY GRID INOX
10/b	Z0010025182NA	H2O DRIP TRAY GRID BLACK
11	VIT0009151	PIN M4
12	VIT0004810	NUT M4
13	Z0020037046	WASTE FLOAT RAL 3020
14	Z0020037045	WASTE FLOAT RAL 9005
15	Z0010025168CM	REAR DOOR RAL9006
16	Z0010027068	BOILER BRACKET
17	Z0010024674-02NA	WIRING SUPPORT (BLACK)
18	SER0000020	LOCK MM20 C.3425
19	Z0020035615	LOCK BRACKET

www.rheavendors.com tel: 0039 02 966 551 fax: 0039 02 96 55 086 email: rheavendors@rheavendors.com exclusive property of rheavendors group

rear cabinet (Unplumbed version)

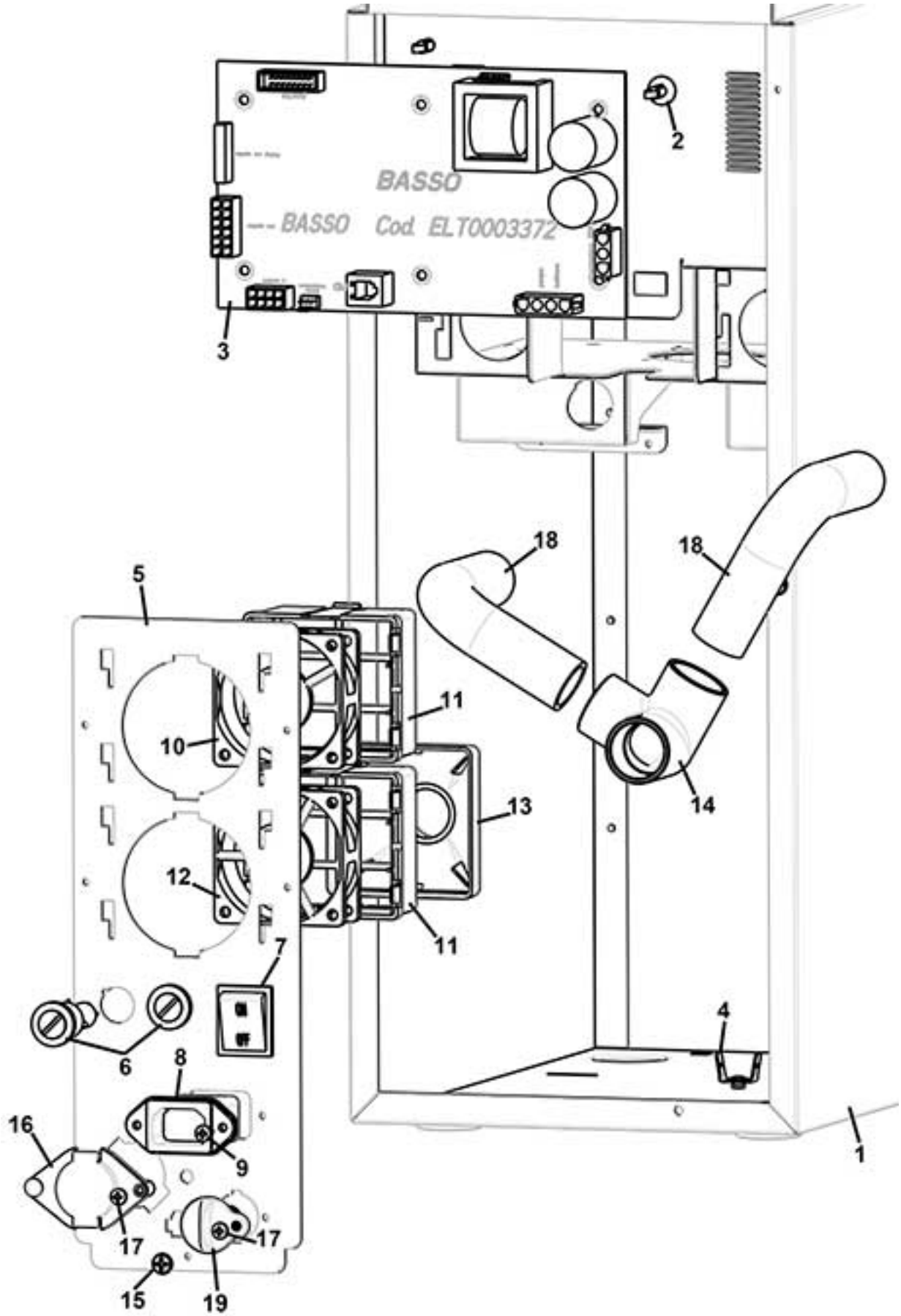

www.rheavendors.com tel: 0039 02 966 551 fax: 0039 02 96 55 086 email: rheavendors@rheavendors.com exclusive property of rheavendors group

rear cabinet (Unplumbed version)		
Pos.	**Code**	**Description**
1	Z0010025155CMR	CABINET + PACKAGE
2	ELE0062020	BOARD SUPPORT
3/a	SCH0009700-02	CPU/POWER LIO 2C
3/b	SCH0009700CL	§ CPU/POWER BOARD 100/120V For 100V version
4	ELE0060520	GROUND PIN
5/a	Z0130014031CM	ELECTRICAL COMPONENT SUPPORT
5/b	Z0130014033CM	ELECTRIC COMPONENT SUP R.9006 For 100V version
6/a	ELE0003508CL	FUSE HOLDER+FUSE 12A
6/b	ELE0003509CL	FUSE HOLDER For 100V version
7/a	ELE0002014CL3	BIPOLAR SWITCH 15A 250V
7/b	ELE0002020	BIPOLAR SWITCH 20A 250V For 100V version
8/a	ELE0002315	MAINS SOCKET 115/250V 10A
8/b	ELE0002318	MAINS SOCKET 115/250V 20/16A For 100V version
9	VIT0002010	SCREW ST HEAD CAP M3.5X9.5
10	ELE0000462	FAN 24V DC-LOW SPEED
11	Z0010027064	FAN SUPPORT
12	ELE0000461	FAN 24V DC-HIGH SPEED
13	Z0010027065	FAN CONNECTOR
14	Z0010025161	EXTRACTOR TUBE CONNECTOR "T"
15	VIT0002401	SCREW ST HEAD CAP M3.5X9.5
16	Z0010020839	INLET H2O VALVE PLUG
17	VIT0002009	SCREW ST HEAD CAP M3.5X6.5
18	TEOL000001CL5	EXTRACTOR TUBE D.20 200MM
19	Z0600016455	H2O OUTLET PLUG

www.rheavendors.com tel: 0039 02 966 551 fax: 0039 02 96 55 086 email: rheavendors@rheavendors.com exclusive property of rheavendors group

rear cabinet (Plumbed version)

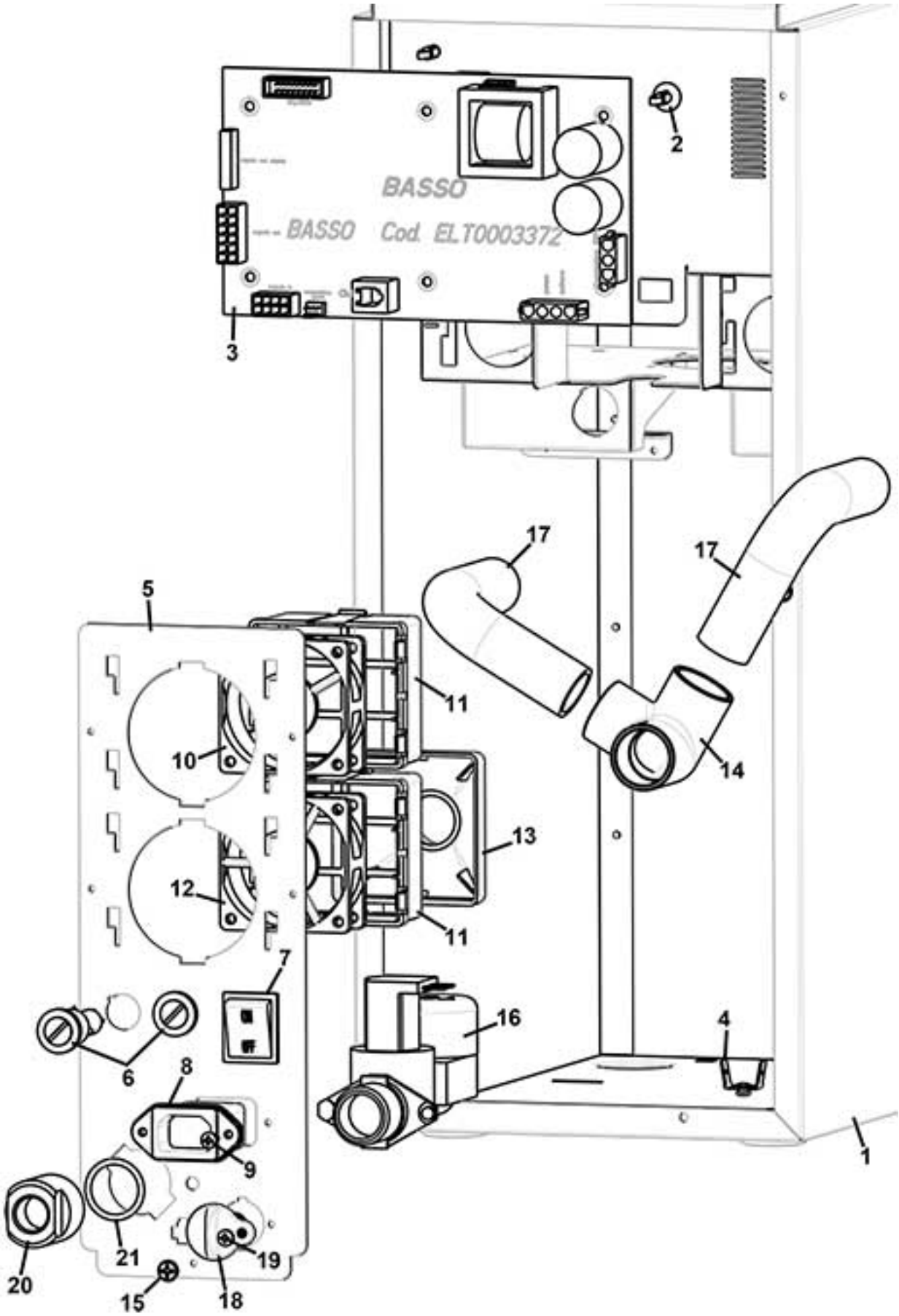

www.rheavendors.com tel: 0039 02 966 551 fax: 0039 02 96 55 086 email: rheavendors@rheavendors.com exclusive property of rheavendors group

rear cabinet (Plumbed version)		
Pos.	**Code**	**Description**
1	Z0010025155CMR	CABINET + PACKAGE
2	ELE0062020	BOARD SUPPORT
3/a	SCH0009700-02	CPU/POWER LIO 2C
3/b	SCH0009700CL	§ CPU/POWER BOARD 100/120V
4	ELE0060520	GROUND PIN
5/a	Z0130014031CM	ELECTRICAL COMPONENT SUPPORT For version 230V and 120V
5/b	Z0130014033CM	ELECTRIC COMPONENT SUP R.9006 For 100V version
6/a	ELE0003508CL	FUSE HOLDER+FUSE 12A For version 230V and 120V
6/b	ELE0003509CL	FUSE HOLDER For 100V version
7/a	ELE0002014CL3	BIPOLAR SWITCH 15A 250V For version 230V and 120V
7/b	ELE0002020	BIPOLAR SWITCH 20A 250V For 100V version
8/a	ELE0002315	MAINS SOCKET 115/250V 10A
8/b	ELE0002318	MAINS SOCKET 115/250V 20/16A For 100V version
8/c	ELE0002316	MAINS SOCKET 120V 15A For 120V version
9	VIT0002010	SCREW ST HEAD CAP M3.5X9.5
10	ELE0000462	FAN 24V DC-LOW SPEED
11	Z0010027064	FAN SUPPORT
12	ELE0000461	FAN 24V DC-HIGH SPEED
13	Z0010027065	FAN CONNECTOR
14	Z0010025161	EXTRACTOR TUBE CONNECTOR "T"
15	VIT0002401	SCREW ST HEAD CAP M3.5X9.5
16	Z0110001119	WATER INLET VALVE 24V DC
17	TEOL000001CL5	EXTRACTOR TUBE D.20 200MM
18	Z0600016455	H2O OUTLET PLUG
19	VIT0002009	SCREW ST HEAD CAP M3.5X6.5
20	Z0100006001-01	F/F CYLINDRIC 3/4-3/8 REDUCT.
21	GUA0000021	OR 130 NBR AL 75 BLACK

www.rheavendors.com tel: 0039 02 966 551 fax: 0039 02 96 55 086 email: rheavendors@rheavendors.com exclusive property of rheavendors group

UPPER COVER

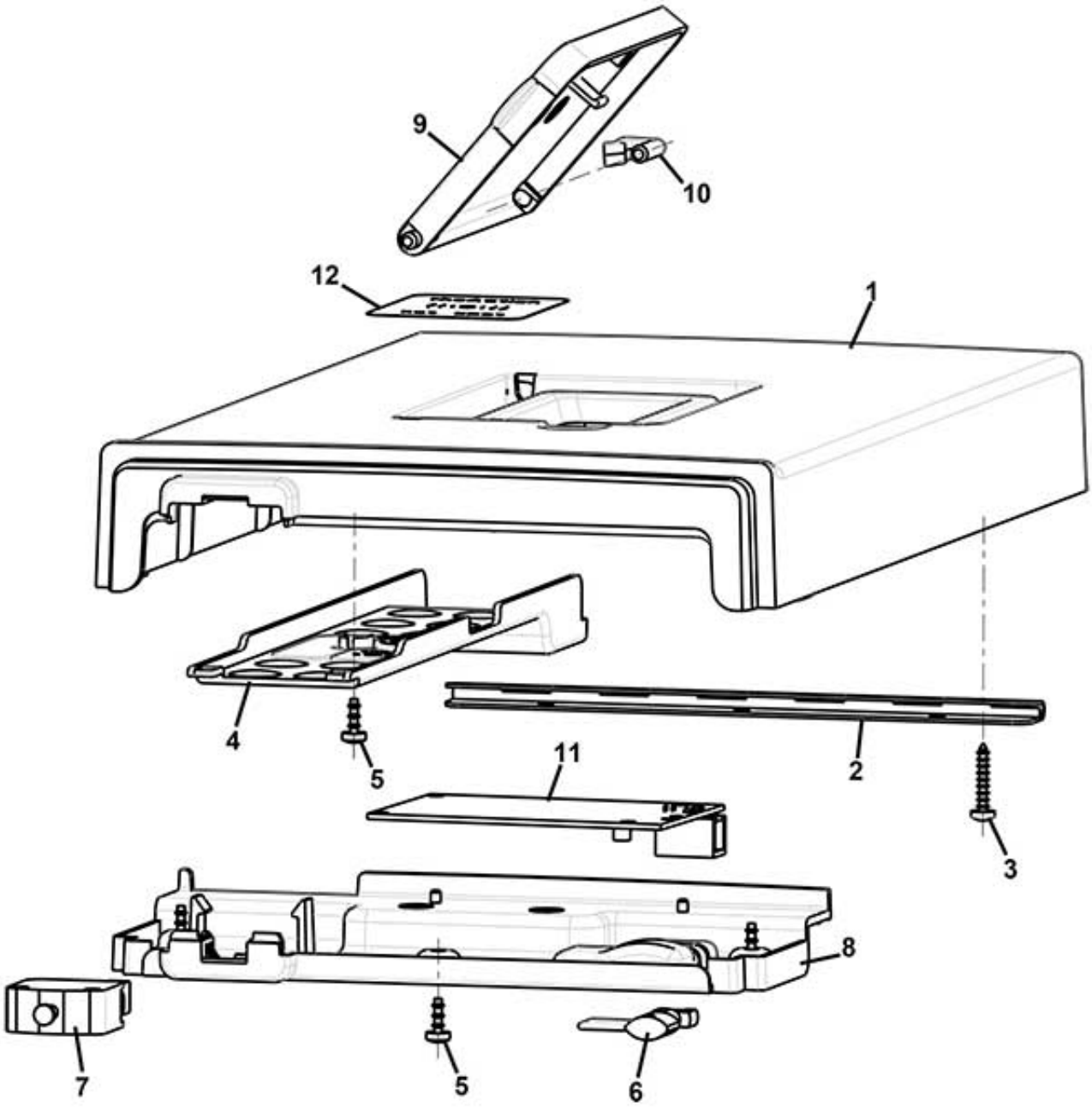

www.rheavendors.com tel: 0039 02 966 551 fax: 0039 02 96 55 086 email: rheavendors@rheavendors.com exclusive property of rheavendors group

UPPER COVER		
Pos.	**Code**	**Description**
1	Z0010025172CM	UPPER LID (RAL9006)
2	Z0010025162	HINGE
3	VIT0002455	SCREW HEAD TAP M3.5X20
4	Z0010025173CG	WIRING COVER (RAL7035)
5	VIT0002469	SCREW HEAD TAP M3.5X10
6	Z0270011109IC	SERVICE KEY RAL2011
7	ELE0002019	SWITCH 16A 250V
8	Z0010025174CG	UPPER COVER CLOSING
9	Z0010024118CM	INLET WATER LID RAL 9006
10	Z0020037124NA	PIN
11	SCH0006262	RFID CARD READER 1 CONNECTOR
12	Z0010027266	RHEACTION HOT SPOT LABEL

www.rheavendors.com tel: 0039 02 966 551 fax: 0039 02 96 55 086 email: rheavendors@rheavendors.com exclusive property of rheavendors group

DOOR

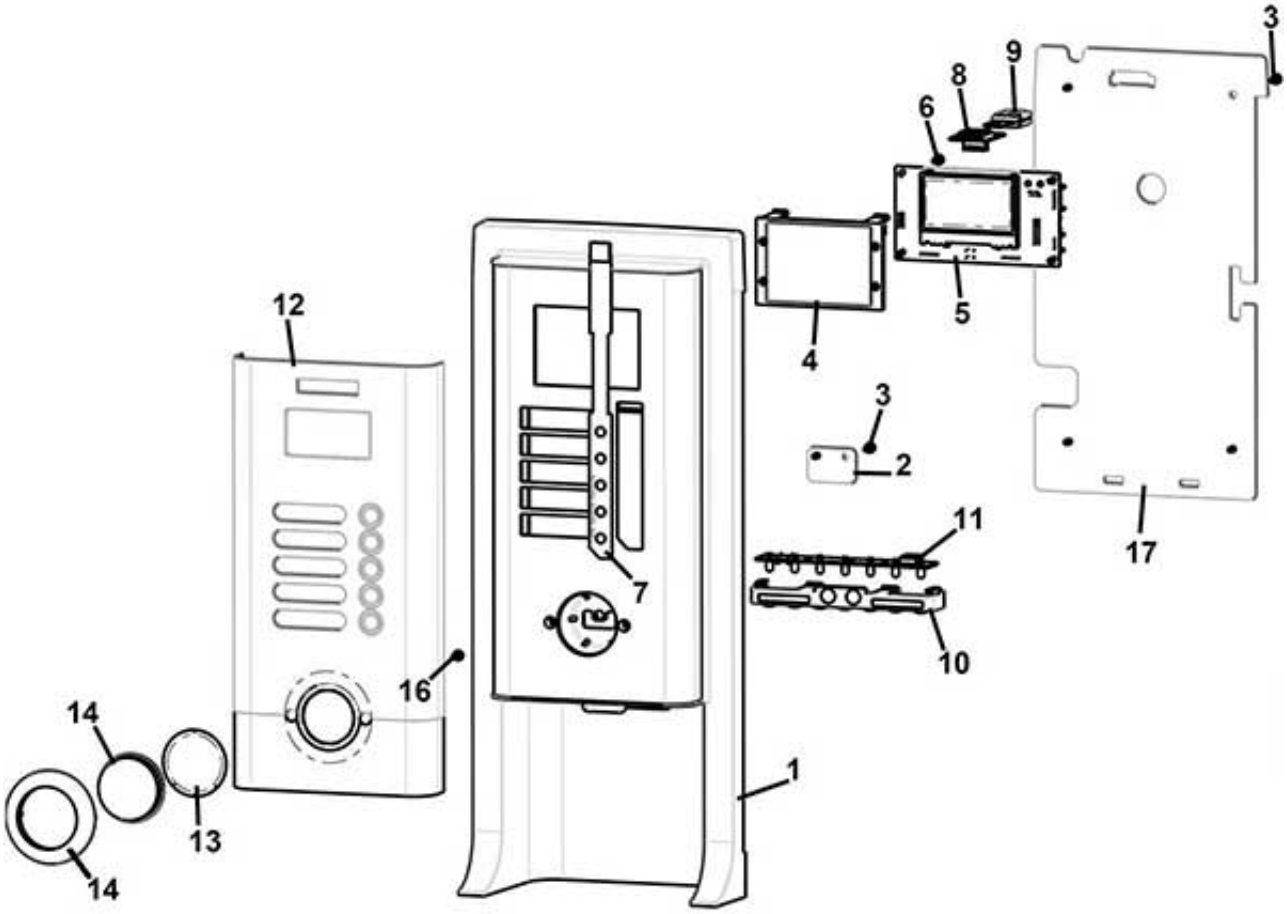

www.rheavendors.com tel: 0039 02 966 551 fax: 0039 02 96 55 086 email: rheavendors@rheavendors.com exclusive property of rheavendors group

DOOR		
Pos.	**Code**	**Description**
1	Z0020046121CM	DOOR (RAL 9006)
2	Z0020046123	LOCK PLATE
3	VIT0002469	SCREW HEAD TAP M3.5X10
4	Z0020037458TR	PLEXIGLASS DISPLAY
5	SCH0009340	DISPLAY BOARD
6	VIT0002009	SCREW ST HEAD CAP M3.5X6.5
7	ELE0000471	KEYPAD 5 BUTTONS-LEFT
8	SCH0005860	FLASH BOARD
9	Z0020040310CL/2	RHEA FLASH MEMORY(RED)
10	Z0020039078TR	CUP STAT.ENLIGHTENMENT SUPPORT
11	SCH0008142	LIGHTING CUP STATION BOARD
12/a	1030000032-01	GRAPHIC PANEL WHITE
12/b	1030000033-01	GRAPHIC PANEL BLACK
13	1030000029	LOGO
14	Z0020039084CL	§ DOOR LOGO FRAME CROMO
16	VIT0002466	SCREW HEAD TAP M3.5X16
17	Z0020046122CM	DOOR REAR CLOSING PLATE 9006

www.rheavendors.com tel: 0039 02 966 551 fax: 0039 02 96 55 086 email: rheavendors@rheavendors.com exclusive property of rheavendors group

mixer plan

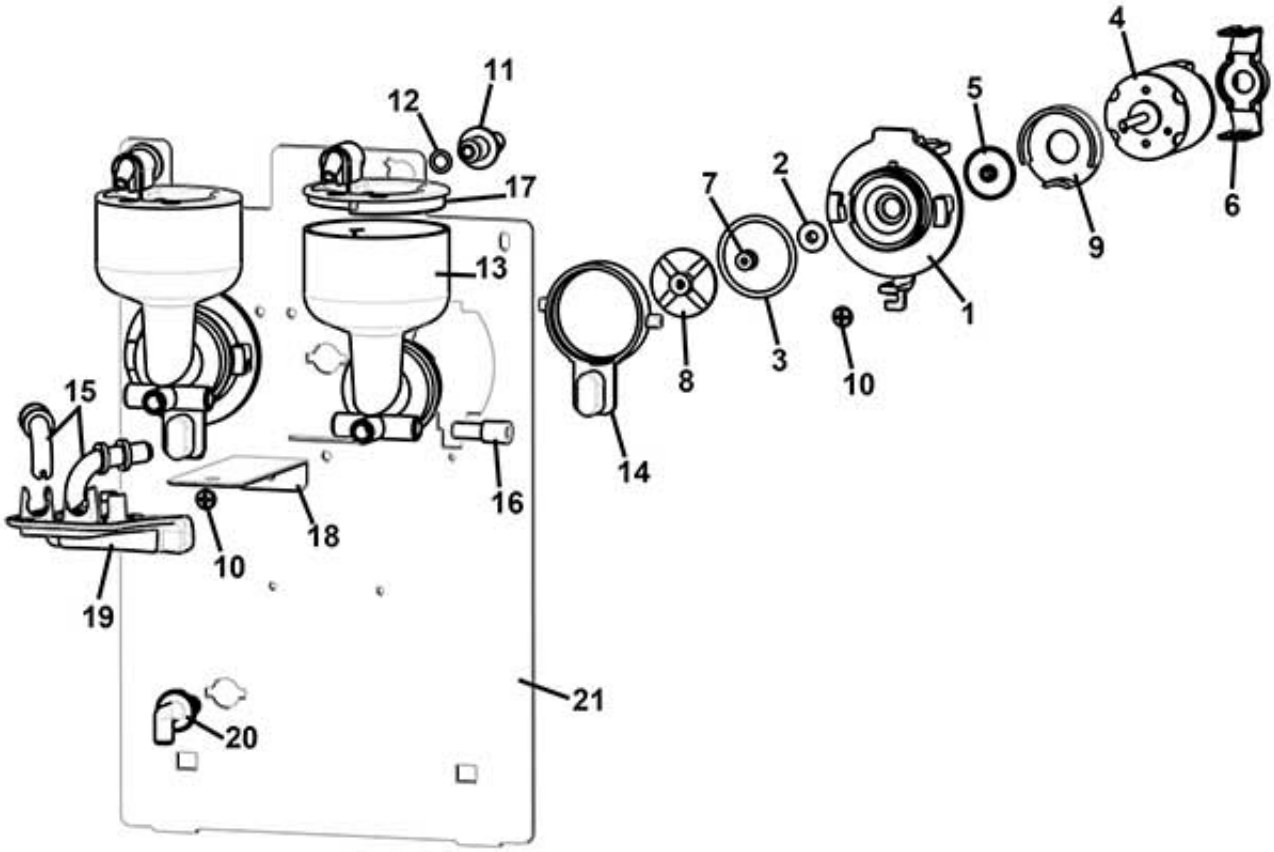

www.rheavendors.com tel: 0039 02 966 551 fax: 0039 02 96 55 086 email: rheavendors@rheavendors.com exclusive property of rheavendors group

mixer plan		
Pos.	**Code**	**Description**
1	Z0080100005	MOTOR MIXER BASE
2	Z0080100015	MIXER BUSH
3	GUA0000084	OR 3131 RED SILICONE A60
4	Z0090003023	MIXER MOTOR 24V DC SHAFT D.4
5	Z0080100024	MIXER FAN
6	Z0080100009IC	MIXER MOTOR SUPPORT RAL2011
7	Z0080100102	MIXER SHAFT GASKET
8	Z0080100011	MIXER FAN
9	Z0080100023IC	MIXER COVER RAL2011
10	VIT0002401	SCREW ST HEAD CAP M3.5X9.5
11	Z0080100043	MIXER CONNECTOR BLACK
12	GUA0000085	OR 106 RED SILICONE A70
13/a	Z0080200110L	MIXING BOWL L.W/H20 BREAKER
13/b	Z0080200111R	MIXING BOWL R.W/H20 BREAKER
13/c	Z0080200112C	MIXING BOWL F.W/H20 BREAKER
14	Z0080100006IC	LOCK RING RAL2011
15	Z0010020052	PRODUCT NOZZLE
16	Z0080100095	TUBE REDUCER D.4
17	Z0080100042	MIXER RING W/PIPE X4,25 BLACK
18	Z0070030407CM	NOZZLE HOLDER
19	Z0020037123NA	NOZZLES HOLDER
20	Z0080100084	90° CONNECTOR
21	Z0070030403-02CM	MIXER SUPPORT (RAL9006)
100	Z0080100001R	§ MIXER BOWL BASE+MOTOR (from pos.1 to pos.9)

www.rheavendors.com tel: 0039 02 966 551 fax: 0039 02 96 55 086 email: rheavendors@rheavendors.com exclusive property of rheavendors group

boiler

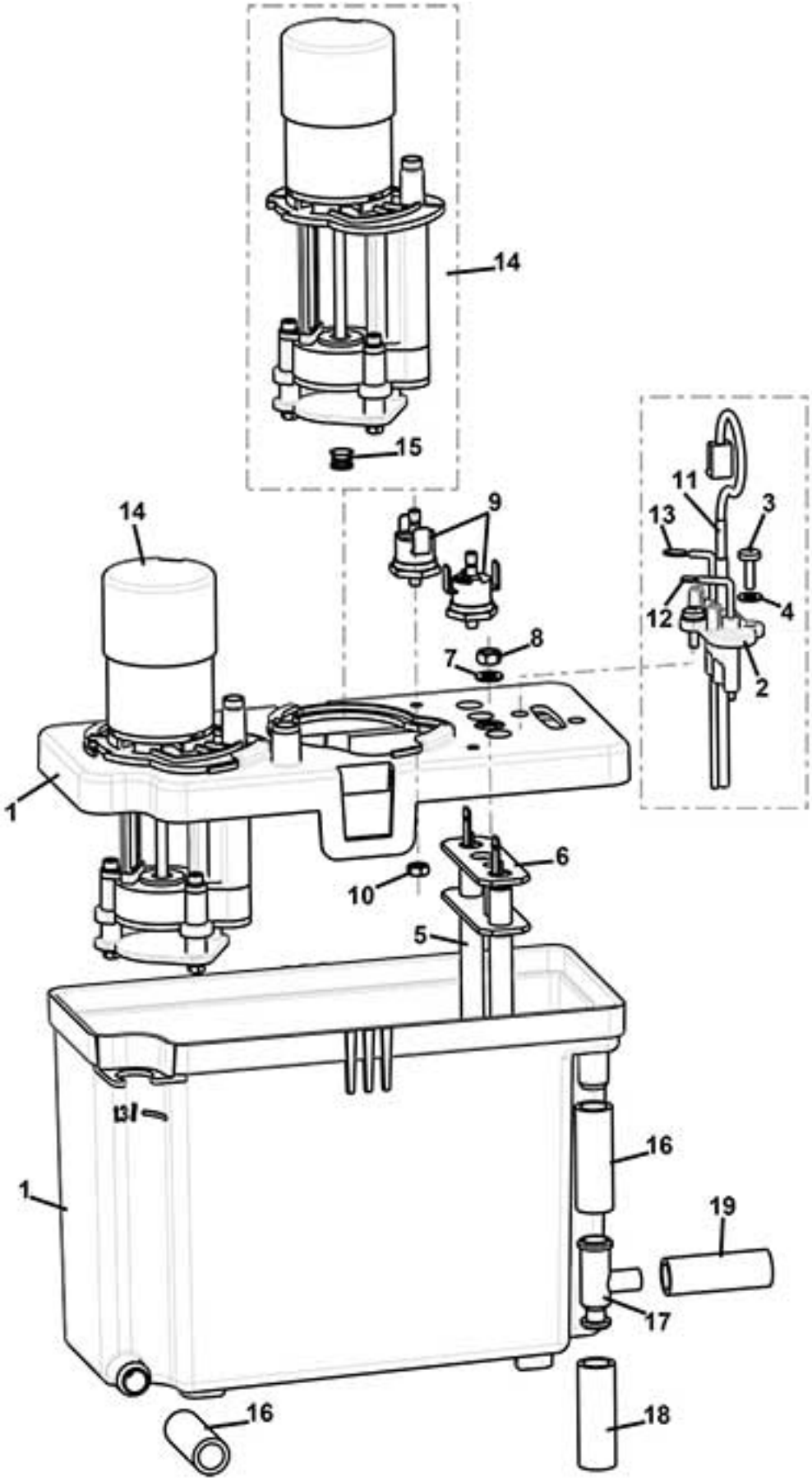

www.rheavendors.com tel: 0039 02 966 551 fax: 0039 02 96 55 086 email: rheavendors@rheavendors.com exclusive property of rheavendors group

boiler		
Pos.	**Code**	**Description**
1	Z0600016453R	§ TANK+BOILER COVER
2	Z0600016089	PROBE SUPPORT
3	VIT0000038	SCREW HEAD TAP CAP M4X10
4	VIT0003211	WASHER 4,3X9X0,8
5/a	Z0600016479R	HEATING ELEMENT 1300W 230V
5/b	Z0600016477	HEATING ELEMENT 1100W 100V For 100V version
5/c	Z0600016478	HEATING ELEMENT 1100W 115V For 120V version
6	Z0600016468	HEATING ELEMENT GASKET
7	VIT0003203	WASHER 5,3X10X1
8	VIT0004804	NUT M5
9	ELE0000965	CLIXSON 88°
10	VIT0004816	NUT M4
11	ELE0000963R	§ TEMPERATURE PROBE+SENSOR
12	Z0600016054	MAXIMUM LEVEL PROBE
13	Z0600016053	MINIMUM LEVEL PROBE
14	Z0600016405R	§ BOILER PUMP
15	Z0080100102	MIXER SHAFT GASKET
16/a	TSIL10/14T-10	SILICON HOSE 10X14 MT.10
16/b	TSIL10/14T-50	SILICON HOSE 10X14 MT.50
17	Z0600016028	T CONNECTOR
18/a	TSIL07/11T-10	SILICON HOSE 7X11 MT.10
18/b	TSIL07/11T-50	SILICON HOSE 7X11 MT.50
19/a	TSIL05/08T-10	SILICON HOSE 5X8 MT.10
19/b	TSIL05/08T-50	SILICON HOSE 5X8 MT.50
100	Z0600016450R4	§ BOILER-2PUMP-230V
101	Z0600016450R5	§ BOILER-2PUMP-230V
102	Z0600016450R8	§ BOILER-2PUMP-100V
103	Z0600016450R9	§ BOILER-2PUMP-100V
104	Z0600016450R6	§ BOILER 2PUMP AR 120V
105	Z0600016450R7	§ BOILER 2PUMP AA 120V

www.rheavendors.com tel: 0039 02 966 551 fax: 0039 02 96 55 086 email: rheavendors@rheavendors.com exclusive property of rheavendors group

UNPLUMBED WATER TANK

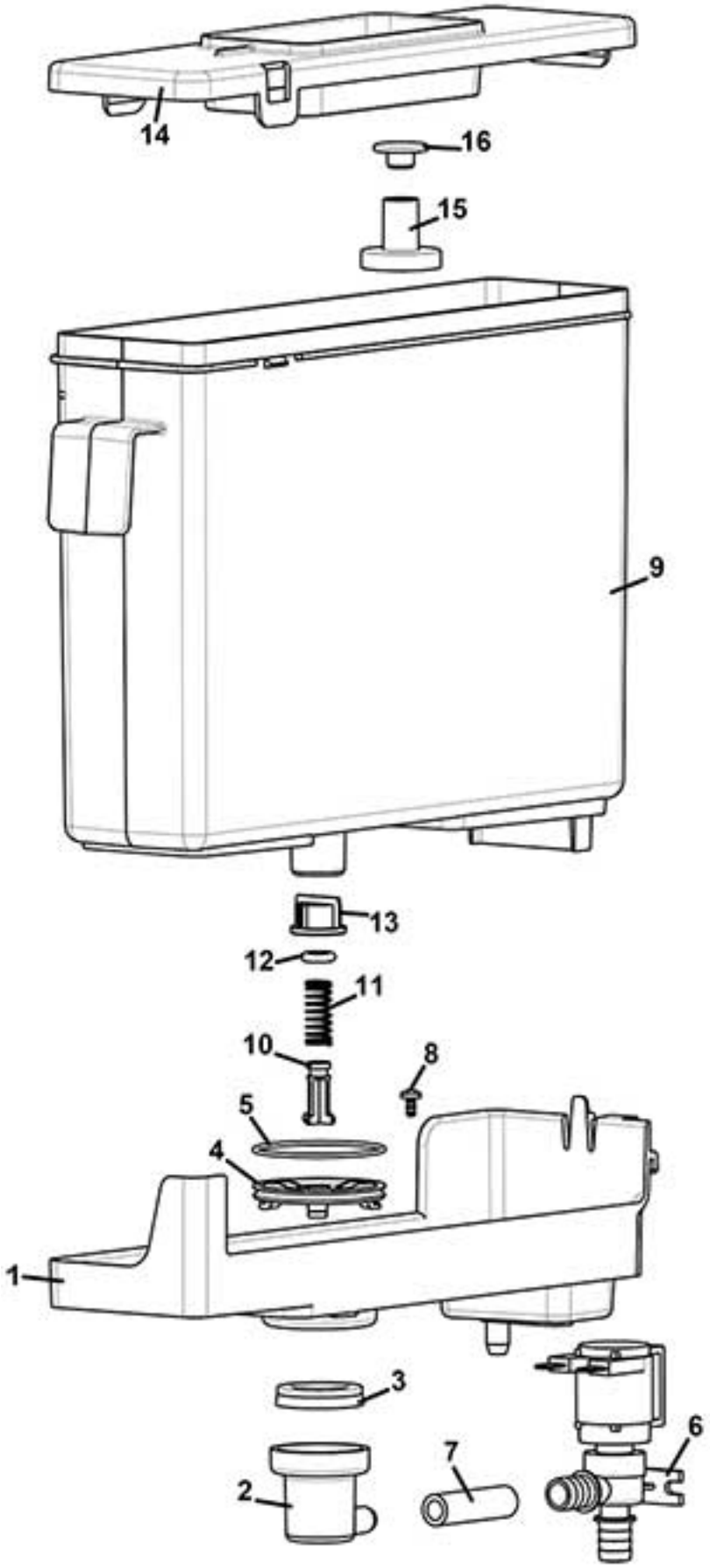

www.rheavendors.com tel: 0039 02 966 551 fax: 0039 02 96 55 086 email: rheavendors@rheavendors.com exclusive property of rheavendors group

UNPLUMBED WATER TANK		
Pos.	**Code**	**Description**
1	Z0800012516	H2O TANK HOLDER
2	Z0800012512	WATER TANK ELBOW CONNECTOR
3	GUA0002100	SILICON GASKET
4	Z0800012515NA	RING GASKET BLACK
5	GUA0000046	OR 2137
6	Z0110001103	VALVE 2W 24V DC
7/a	TSIL07/11T-10	SILICON HOSE 7X11 MT.10
7/b	TSIL07/11T-50	SILICON HOSE 7X11 MT.50
8	VIT0002015	SCREW ST HEAD CAP M3.5X9.5
9	Z0800012506-03	H2O TANK
10	Z0800012009	WATER TANK CLOSING PIN
11	Z0800012012	PIN SPRING
12	GUA0000082	SILICON GASKET D.6
13	Z0110020011	FILTER
14	Z0800012507	H2O TANK LID
15	Z0020037046	WASTE FLOAT RAL 3020
16	Z0020037045	WASTE FLOAT RAL 9005
100	Z0800012500CL	§ WATER TANK From pos. 9 to pos. 16

www.rheavendors.com tel: 0039 02 966 551 fax: 0039 02 96 55 086 email: rheavendors@rheavendors.com exclusive property of rheavendors group

products container

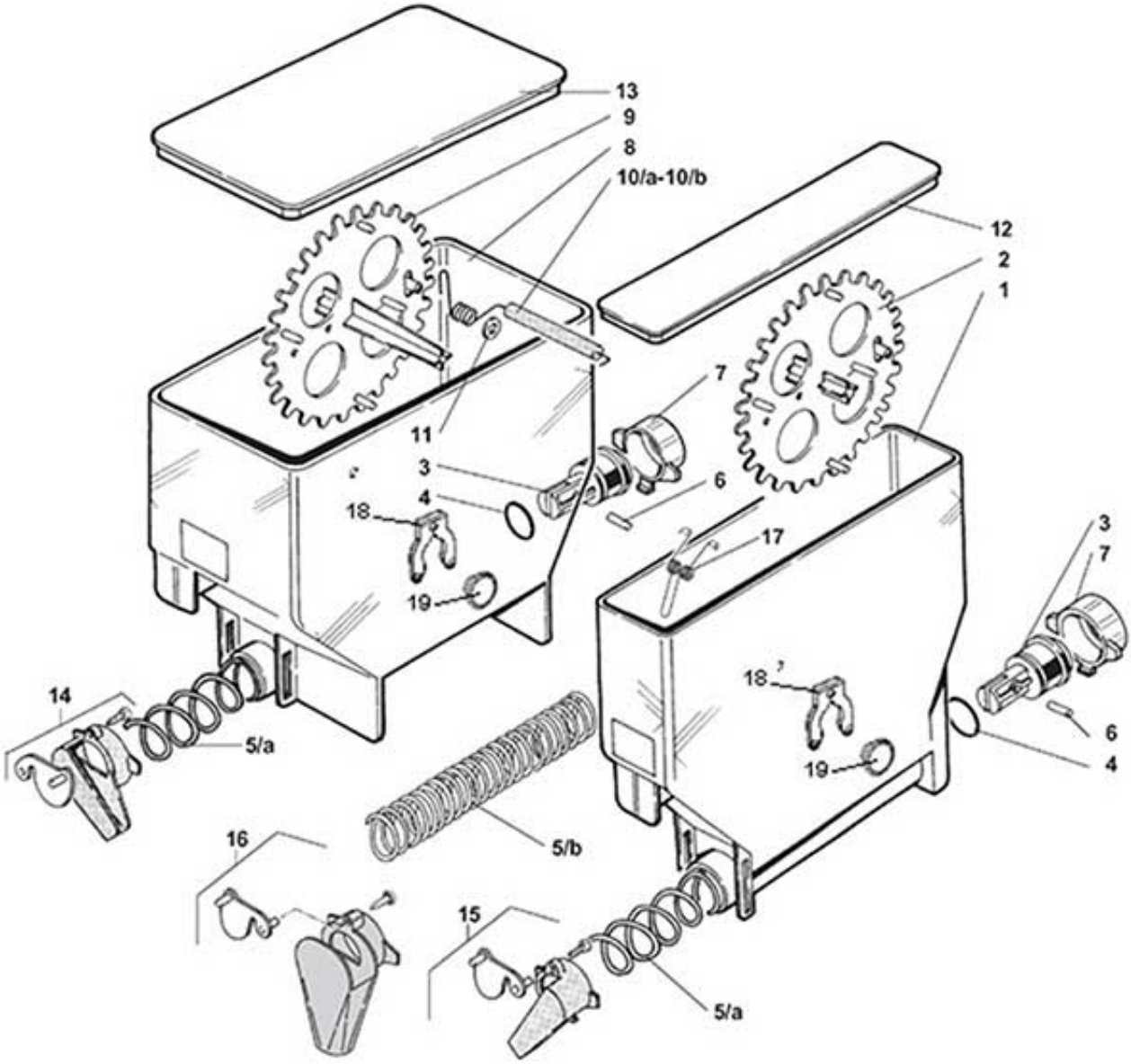

www.rheavendors.com tel: 0039 02 966 551 fax: 0039 02 96 55 086 email: rheavendors@rheavendors.com exclusive property of rheavendors group

products container		
Pos.	**Code**	**Description**
1	Z0230030500	INGREDIENT CANISTER 54 190
2	Z0230030236AB	§ WHEEL MM54
3	Z0230030012	SPIRAL PIN
4	GUA0000083	OR 123 RED SILICONE A70
5/a	Z0230030014	SPIRAL 18
5/b	Z0230030013	SPIRAL 9
6	VIT0005106	PIN 2X14
7	Z0230030011	REAR BUSH
8	Z0230030520	INGREDIENT CANISTER 110-190
9	Z0230030237AB	§ WHEEL MM110
10/a	Z0230030064	AGITATOR 112 - RIGHT OUTLET
10/b	Z0230030062	AGITATOR 112 - LEFT OUTLET
11	VIT0003210	WASHER 8,4X16X1,6
12	Z0230030156	CANISTER 54 LID
13	Z0230030158	CANISTER 110 LID
14/a	Z0230030058R	§ INGRED. CHUTE-RIGHT ORANGE
14/b	Z0230030044R	§ INGREDIENT CHUTE-RIGHT RED
15/a	Z0230030057R	§ INGREDIENT CHUTE-LEFT ORANGE
15/b	Z0230030043R	§ INGREDIENT CHUTE-LEFT RED
16/a	Z0230030059R	§ INGRED. CHUTE-FRONTALORANGE
16/b	Z0230030055R	§ INGREDIENT CHUTE-FRONTAL RED
17	Z0230030060-05	PRODUCT AGITATOR
18	Z0230030239	WHEEL PIN FORK
19	Z0230030238-02	WHEEL PIN
100	Z0230030522R	§ CAN. 110-190 AGIT.18 W/LID-R
101	Z0230030525R	§ CAN. 110-190 AGIT.18 W/LID-L
102	Z0230030506R	§ CANIS. 54-190 WHEEL18 W/LID
103	Z0230030502R	§ CANIS. 54-190 WHEEL9 W/LID
104	Z0230030503R	§ CANIS. 54-190 AGIT.9 W/LID

www.rheavendors.com tel: 0039 02 966 551 fax: 0039 02 96 55 086 email: rheavendors@rheavendors.com exclusive property of rheavendors group

BRITA FILTER

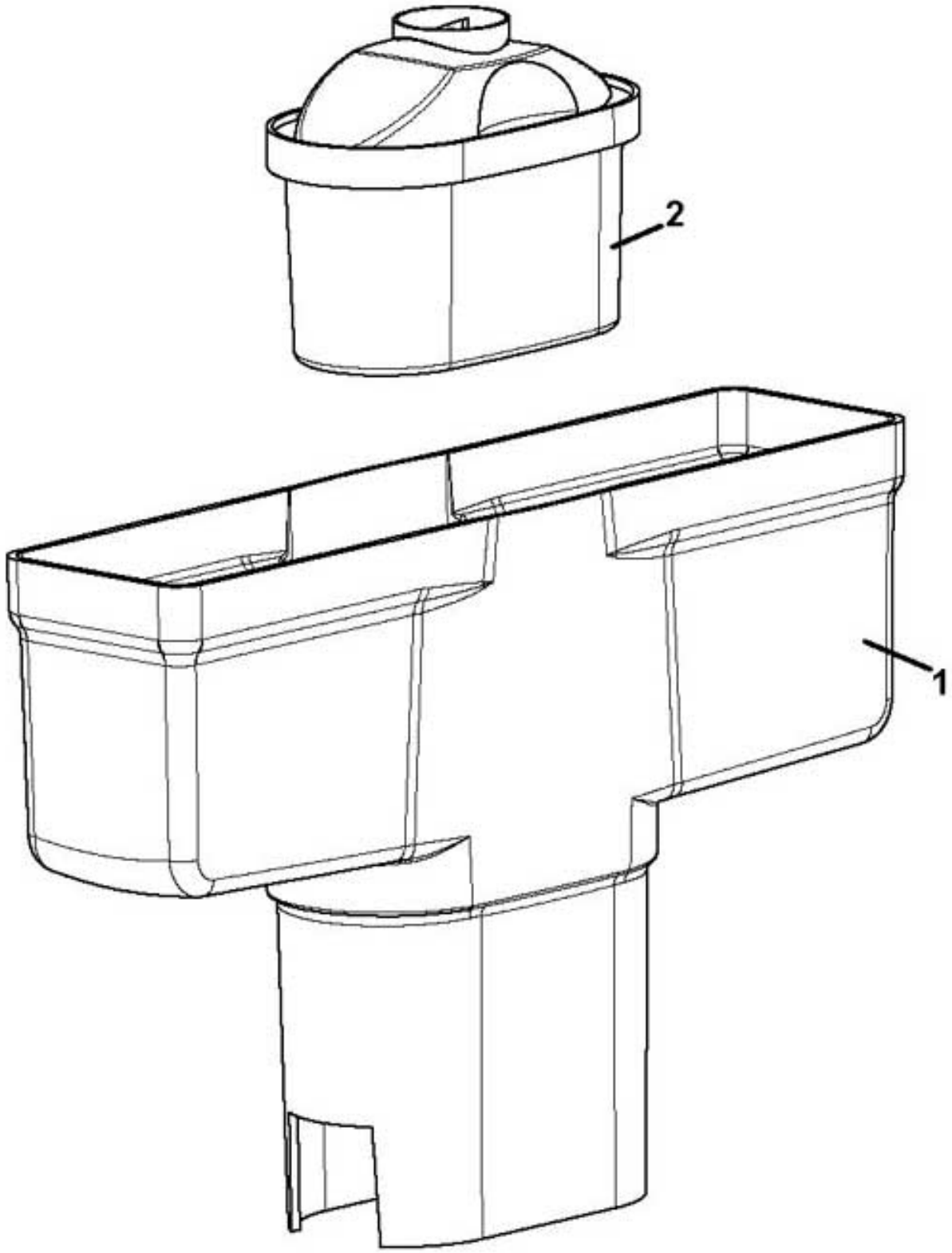

www.rheavendors.com tel: 0039 02 966 551 fax: 0039 02 96 55 086 email: rheavendors@rheavendors.com exclusive property of rheavendors group

BRITA FILTER		
Pos.	**Code**	**Description**
1	Z0800012522	BRITA MAXTRA 2020 FILTER SUPP.
2	Z0060001014	BRITA FILTER MAXTRA +
3	Z0800012513R1	ADAPTOR W/MAXT BRITA+FLTER KIT (Pos.1 + 2)

www.rheavendors.com tel: 0039 02 966 551 fax: 0039 02 96 55 086 email: rheavendors@rheavendors.com exclusive property of rheavendors group