vending machine

file immagini/ricambi/copertine/rhea business line doppio i.jpg NOT exists!!!!!!

spare parts manual

www.rheavendors.com tel: 0039 02 966 551 fax: 0039 02 96 55 086 email: rheavendors@rheavendors.com exclusive property of rheavendors group

cabinet (instant version)

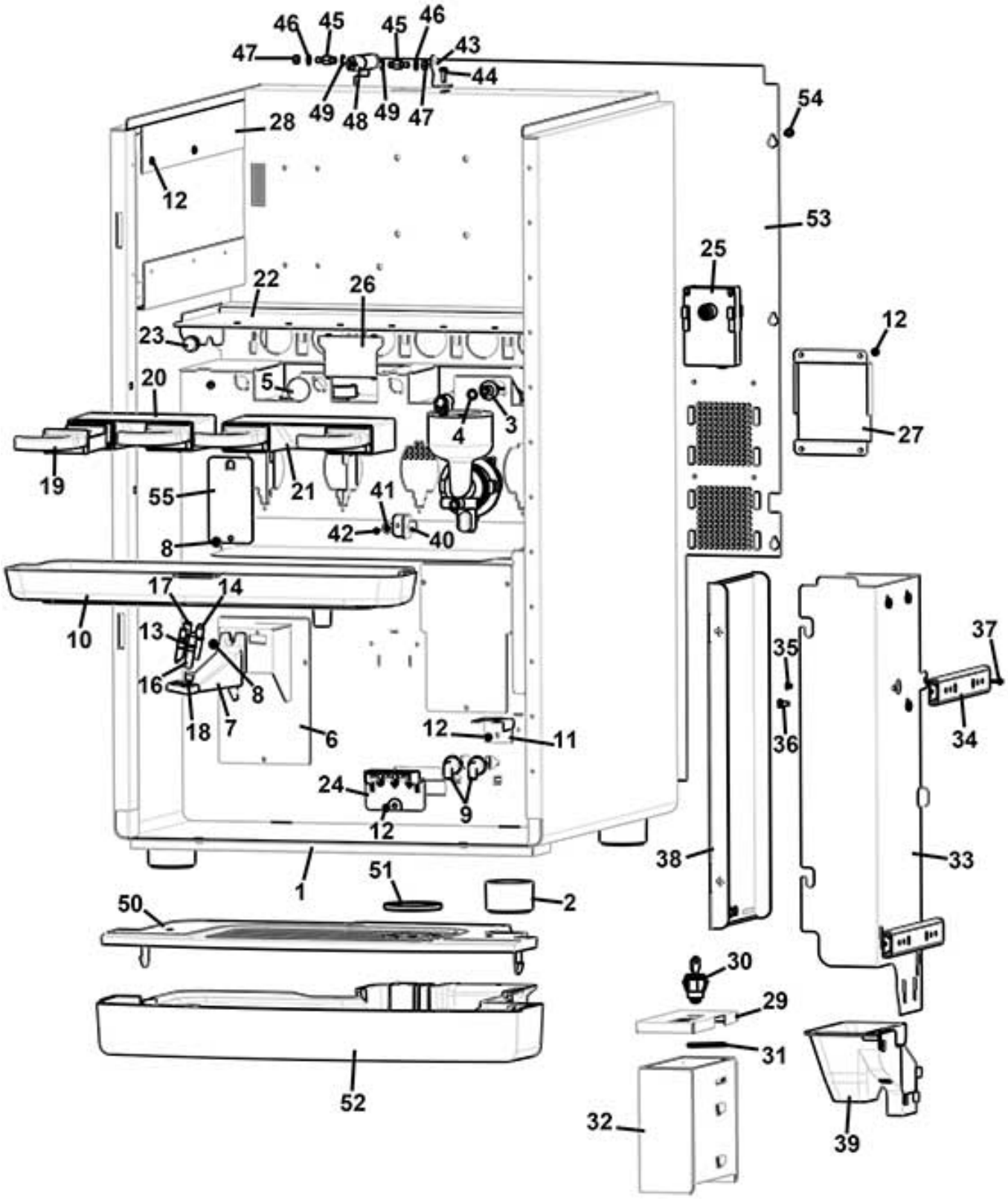

www.rheavendors.com tel: 0039 02 966 551 fax: 0039 02 96 55 086 email: rheavendors@rheavendors.com exclusive property of rheavendors group

cabinet (instant version)		
Pos.	**Code**	**Description**
1	Z0010026105-09NA	CABINET
2	Z0010024111CL1	§ MACHINE FOOT D.50X29 RAL9005
3	Z0080100043	MIXER CONNECTOR BLACK
4	GUA0000085	OR 106 RED SILICONE A70
5	Z0080100035NA	CONNECTOR PLUG BLACK
6	Z0380011700NA	NOZZLE HOLDER BLACK
7	Z0380011551NA	NOZZLES HOLDER
8	VIT0002401	SCREW ST HEAD CAP M3.5X9.5
9	Z0080100084	90° CONNECTOR
10	Z0070035005NA	DRIP TRAY
11	Z0070035014NA	PIPE STOPPER
12	VIT0002009	SCREW ST HEAD CAP M3.5X6.5
13	Z0380011665EB	COFFEE NOZZLE RAL8019
14	Z0380011667MD	THE NOZZLE RAL6032
16	Z0380011666CK	MILK NOZZLE (RAL7037)
17	Z0380010657NA	ESPRESSO NOZZLE D. 5,7
18	Z0380010656NA	PLUG BLACK
19	Z0010027022	TRAP DRAWER REMOVABLE
20	Z0010027021	TRAP DRAWER
21	Z0010027037	TRAP DRAWER
22	Z0010026131NA	CANISTER SUPPORT BLACK
23	VIT0009168	KNURLED HANDLE
24	Z0070035010CL	§ DRIP TRAY SENSOR SUPPORT
25	Z0090002113	MOTOR 24 DC 97 RPM
26	Z0010020029NA	GEARBOX MOTOR PLUG BLACK
27	Z0010026019NA	BULKHEAD
28	Z0010026128NA	CABLE STOP
29	Z0030010166-02NA	COVER COIN BOX
30	SER0000020	LOCK MM20 C.3425
31	SER0001005	LOCK PLATE
32	Z0030010160NA	COIN BOX
33	Z0010026022NA	COIN SUPPORT
34	VIT0010201	RAIL
35	VIT0000133	M4*5 TSP A2 SCREW
36	4060010126	PAYM SYSTEM FIXING SCREW
37	VIT0000004	SCREW HEAD TAP CAP M3X10
38	Z0010026171TR	PAYM SYSTEM COVER TRANSPARENT
39	Z0010026025NA	COIN RETURN CHUTE BLACK
40	Z0010026167	MAGNET SUPPORT
41	ELT0030760	MAGNET D 10X3
42	VIT0000121	SCREW COUNT FLAT HEAD M3X8
43	Z0010026032NA	GAS SPRING LOWER BRACKET
44	VIT0000013	SCREW HEAD TAP CAP M4X12
45	Z0010026033	GAS SPRING PIN
46	VIT0003004	WASHER 5,3X10X1
47	VIT0004804	NUT M5
48	VIT0010206	GAS SPRING 408692

www.rheavendors.com tel: 0039 02 966 551 fax: 0039 02 96 55 086 email: rheavendors@rheavendors.com exclusive property of rheavendors group

cabinet (instant version)		
49	VIT0006504	RING 5
50	Z0020043058NA	DRIP TRAY GRID
51	Z0020043019	RING GRID INOX
52	Z0020043056CL	§ DRIP TRAY+SENSOR
53	Z0010026117-02NA	REAR DOOR BLACK
54	VIT0001005	SCREW HEAD TAP CAP M4X12
55	Z0010020028NA	MIXER PLUG BLACK

www.rheavendors.com tel: 0039 02 966 551 fax: 0039 02 96 55 086 email: rheavendors@rheavendors.com exclusive property of rheavendors group

rear view cabinet (instant version)

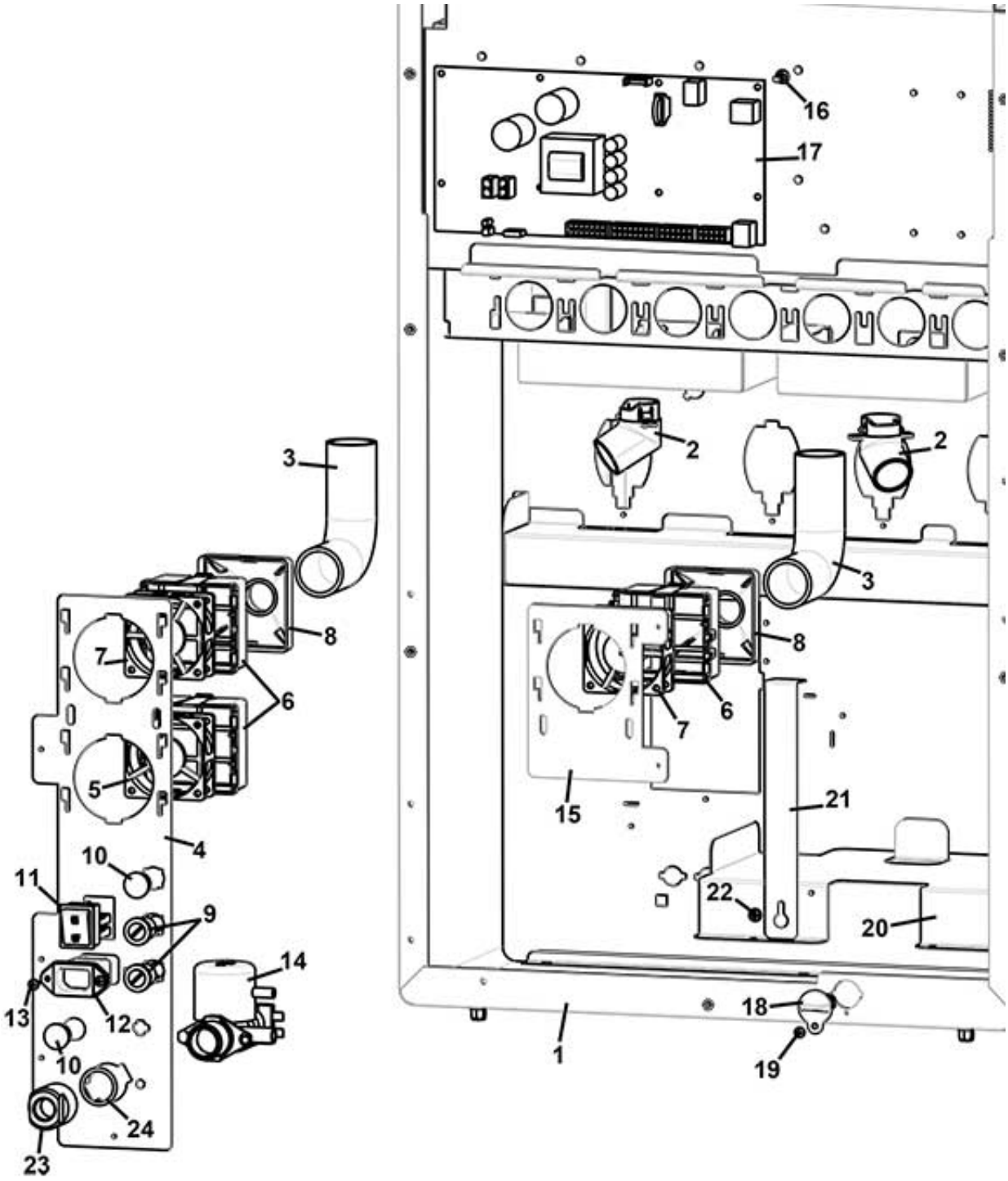

www.rheavendors.com tel: 0039 02 966 551 fax: 0039 02 96 55 086 email: rheavendors@rheavendors.com exclusive property of rheavendors group

rear view cabinet (instant version)		
Pos.	**Code**	**Description**
1	Z0010026105-09NA	CABINET
2	Z0010027043NA	EXTRACTOR TUBE BLACK
3	TEOL000001CL1	EXTRACTOR TUBE D.20 170MM
4	Z0010026123NA	IDRICAL COMPONENT SUPPORT
5	ELE0000462	FAN 24V DC-LOW SPEED
6	Z0010027064	FAN SUPPORT
7	ELE0000461	FAN 24V DC-HIGH SPEED
8	Z0010027065	FAN CONNECTOR
9	ELE0003508CL	FUSE HOLDER+FUSE 12A
10	GUA0011010	PLUG
11	ELE0002014CL3	BIPOLAR SWITCH 15A 250V
12	ELE0002315	MAINS SOCKET 115/250V 10A
13	VIT0002010	SCREW ST HEAD CAP M3.5X9.5
14	Z0110001086	WATER INLET VALVE 24V DC
15	Z0010026129NA	TRAP SUPPORT
16	ELE0062020	BOARD SUPPORT
17	SCH0008964-01	CPU/POWER BOARD
18	Z0600016455	H2O OUTLET PLUG
19	VIT0002009	SCREW ST HEAD CAP M3.5X6.5
20	Z0600019739NA	BOILER SUPPORT BLACK
21	Z0600019736	BOILER BRACKET
22	VIT0002401	SCREW ST HEAD CAP M3.5X9.5
23	Z0100006001-01	F/F CYLINDRIC 3/4-3/8 REDUCT.
24	GUA0000021	OR 130 NBR AL 75 BLACK

www.rheavendors.com tel: 0039 02 966 551 fax: 0039 02 96 55 086 email: rheavendors@rheavendors.com exclusive property of rheavendors group

UPPER COVER

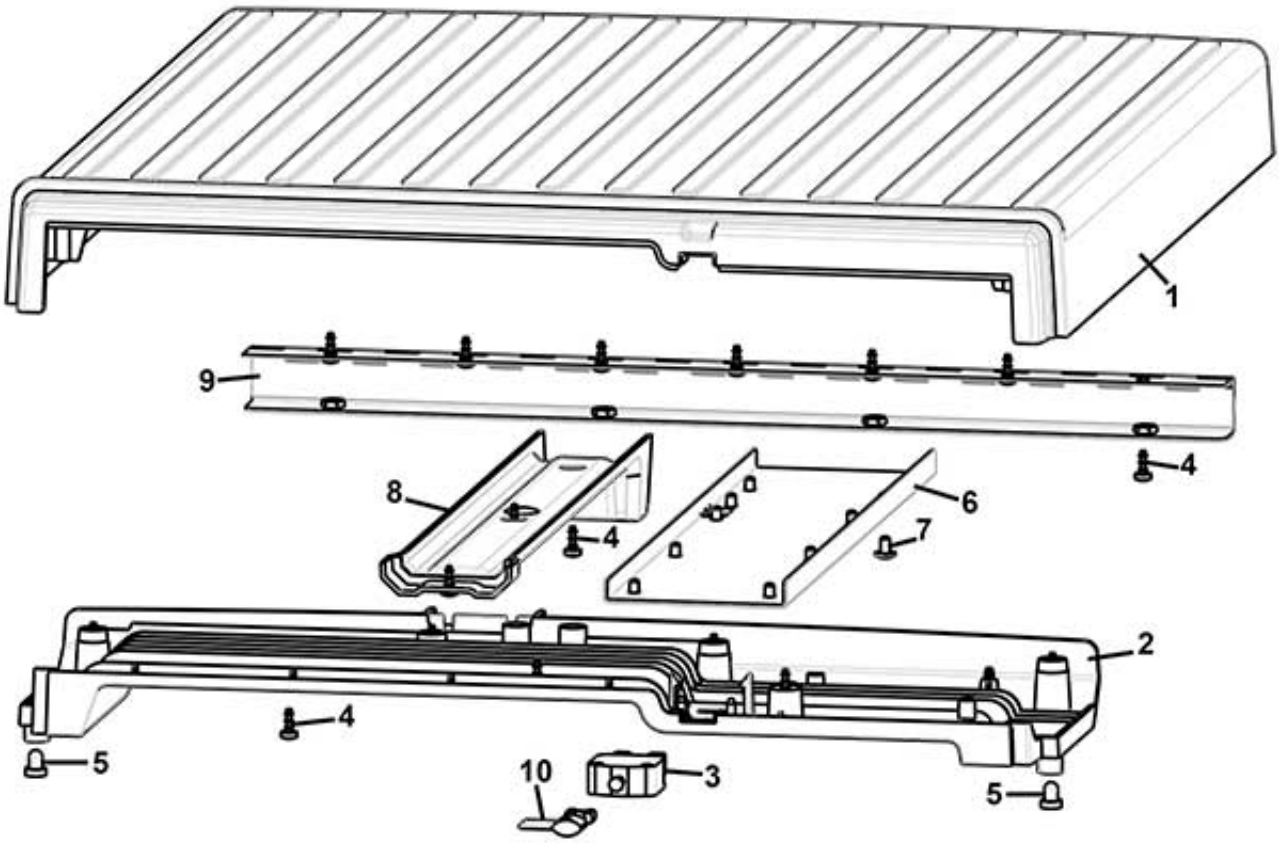

www.rheavendors.com tel: 0039 02 966 551 fax: 0039 02 96 55 086 email: rheavendors@rheavendors.com exclusive property of rheavendors group

UPPER COVER		
Pos.	**Code**	**Description**
1/a	Z0010026051CMR	UPPER LID 9006 + INSERT
1/b	Z0010026051NAR	UPPER LID 9005 + INSERT
2	Z0010026058-03CG	UPPER COVER CLOSING RAL 7035
3	ELE0002019	SWITCH 16A 250V
4	VIT0002469	SCREW HEAD TAP M3.5X10
5	Z0020018061	SELECTION BUTTON PLUG
6	Z0010026054CG	GAS SPRING SUPPORT RAL7035
7	VIT0000030	SCREW HEAD TAP CAP M4X7
8	Z0010026057CG	WIRING SUPPORT RAL 7035
9	Z0010026037NA	UPPER LID HINGE BLACK
10	Z0270011109R0	§ SERVICE KEY

www.rheavendors.com tel: 0039 02 966 551 fax: 0039 02 96 55 086 email: rheavendors@rheavendors.com exclusive property of rheavendors group

DOOR

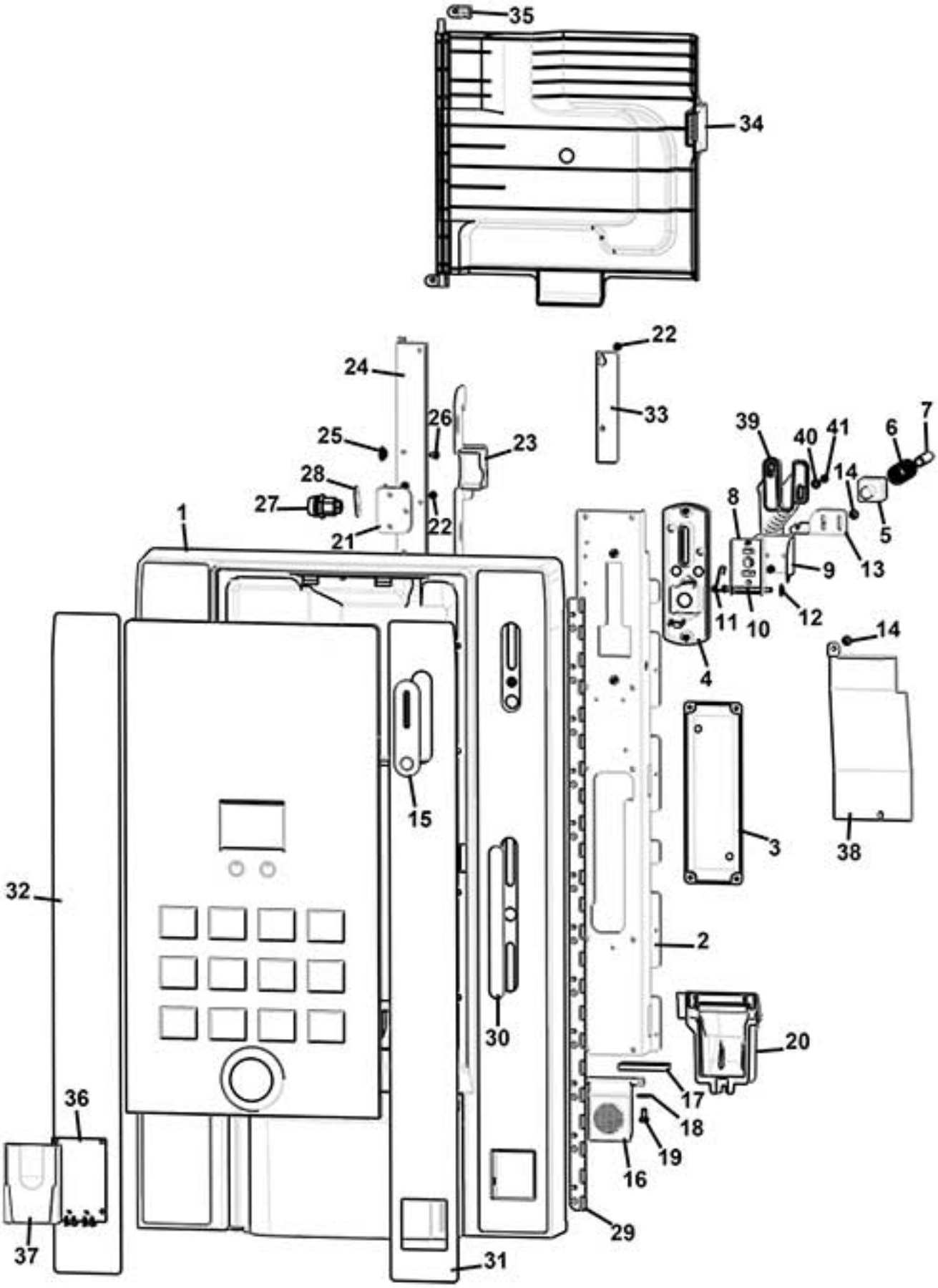

www.rheavendors.com tel: 0039 02 966 551 fax: 0039 02 96 55 086 email: rheavendors@rheavendors.com exclusive property of rheavendors group

DOOR		
Pos.	**Code**	**Description**
1/a	Z0020043006-06CM	DOOR (RAL9006)
1/b	Z0020043006-06NA	DOOR RAL 9005
2	Z0020043035NA	HINGE REINFORCEMENT BLACK
3	Z0020043109NA	INSERT COIN COVER
4	Z0020043061NA	COIN INLET SUPPORT BLACK
5/a	Z0020043063CM	COIN RETURN BUTTON (RAL9006)
5/b	Z0020043063NA	COIN RETURN BUTTON RAL 9005
6	4050010074	COIN RETURN BUTTON SPRING
7	Z0020034023	COIN RETURN PIN
8	Z0020043064	COIN RETURN BUTTON BRACKET
9	Z0020043065	COIN RETURN LEVER
10	Z0020034187	PIN
11	Z0020043068	COIN RETURN SPRING
12	VIT0007102	BENZING CLIP
13	Z0020043066	COIN RETURN LEVER ADJUSTABLE
14	VIT0002401	SCREW ST HEAD CAP M3.5X9.5
15/a	Z0020043067CM	COIN MECH. PLATE (RAL9006)
15/b	Z0020043067NA	COIN MECH. PLATE RAL 9005
16	Z0020043072NA	COINS FLAP
17	Z0020042082	COIN RETURN FLAP COUNTERWEIGHT
18	VIT0003302	WASHER 5,5X15X1,6
19	VIT0000208	SCREW HEX HEAD M5X10
20	Z0020043070NA	COIN RETURN CONTAINER (BLACK)
21	Z0020043032	LOCK SUPPORT
22	VIT0002469	SCREW HEAD TAP M3.5X10
23	Z0020043033NA	DOOR BLOCK SHAFT SUPP. BLACK
24	SER0001019	DOOR BLOCK SHAFT
25	Z0020024618	COIN BOX FLOWING NUT
26	VIT0000021	SCREW HEAD TAP CAP M4X6
27/a	SER0000001/1	INOX LOCK C6802
27/b	SER0000023	LOCK RIELDA
28/a	SER0001010	LOCK BRACKET
28/b	SER0001016	LOCK BRACKET
29	Z0010026120-02	DOOR HINGE
30	Z0020039416	COIN ENTRY BLANK PLATE
31/a	1030000021	CD SIDE PANEL RIGHT G.R. BLACK
31/b	1030000022	DOOR RIGHT LATERAL PANEL-WHITE
32/a	1030000025	CD SIDE PANEL LEFT BLACK
32/b	1030000026	DOOR LEFT LATERAL PANEL-WHITE
33	Z0020043078NA	WIRING DOOR PLATE (BLACK)
34/a	Z0020043036IC	BOARD COVER RAL2011 Up to serial 20164699999
34/b	Z0020043036IC	BOARD COVER RAL2011 from serial 20164700000
35	Z0020043037NA	BOARD FIXING BRACKET
36	SCH0006261	RFID CARD READER_1
37	Z0020043077NA	RFID CARD HOLDER CD
38	Z0020043111NA	RFID COVER BLACK
39	Z0020043062NA	COIN CHUTE (BLACK)

www.rheavendors.com tel: 0039 02 966 551 fax: 0039 02 96 55 086 email: rheavendors@rheavendors.com exclusive property of rheavendors group

DOOR		
40	VIT0003301	WASHER 4,3X12X1,5
41	VIT0002466	SCREW HEAD TAP M3.5X16

www.rheavendors.com tel: 0039 02 966 551 fax: 0039 02 96 55 086 email: rheavendors@rheavendors.com exclusive property of rheavendors group

LIGHTING GLASS

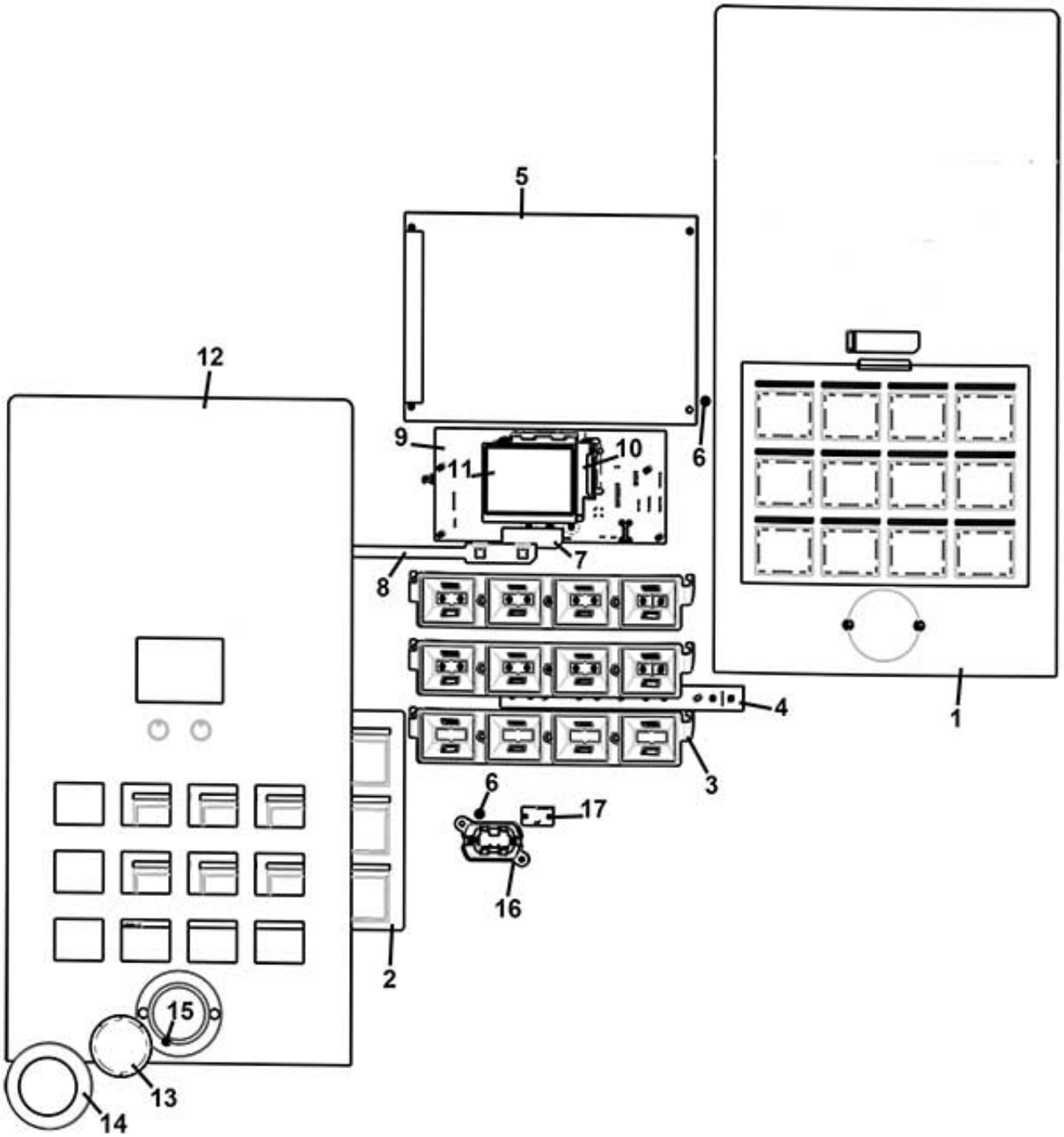

www.rheavendors.com tel: 0039 02 966 551 fax: 0039 02 96 55 086 email: rheavendors@rheavendors.com exclusive property of rheavendors group

LIGHTING GLASS		
Pos.	**Code**	**Description**
1	Z0020043011	FRONTAL PLEXIGLASS
2	ELE0000475	CAPACITIVE KEYPAD-12 BUTTONS
3	Z0020043083CY	LABEL LIGHT GUIDE
4	SCH0009540	STICKERS LIGHTING BOARD
5	Z0020043079	PLEXIGLASS LIGHTING
6	VIT0002469	SCREW HEAD TAP M3.5X10
7	Z0020043029	SUGAR BUTTON SPACE STICKER
8	ELE0000474	KEYPAD- 2 BUTTONS
9	SCH0009982CL1	§ LCD BOARD 3,5" CD
10/a	Z0020043112	DISPLAY BOARD SUPPORT RIGHT
10/b	Z0020043113	DISPLAY BOARD SUPPORT LEFT
11	SCH0009983-01	3,5" DISPLAY BOARD
12	1030000069	GRAPHIC PANEL-BLACK
13	1030000297	BL LOGO
14	Z0020039084CL	§ DOOR LOGO FRAME CROMO
15	VIT0002466	SCREW HEAD TAP M3.5X16
16	Z0020043046NA	LOGO LIGHTING BOARD SUPPORT
17	SCH0009580	LOGO LIGHTING BOARD

www.rheavendors.com tel: 0039 02 966 551 fax: 0039 02 96 55 086 email: rheavendors@rheavendors.com exclusive property of rheavendors group

CUPS STATION FLAP

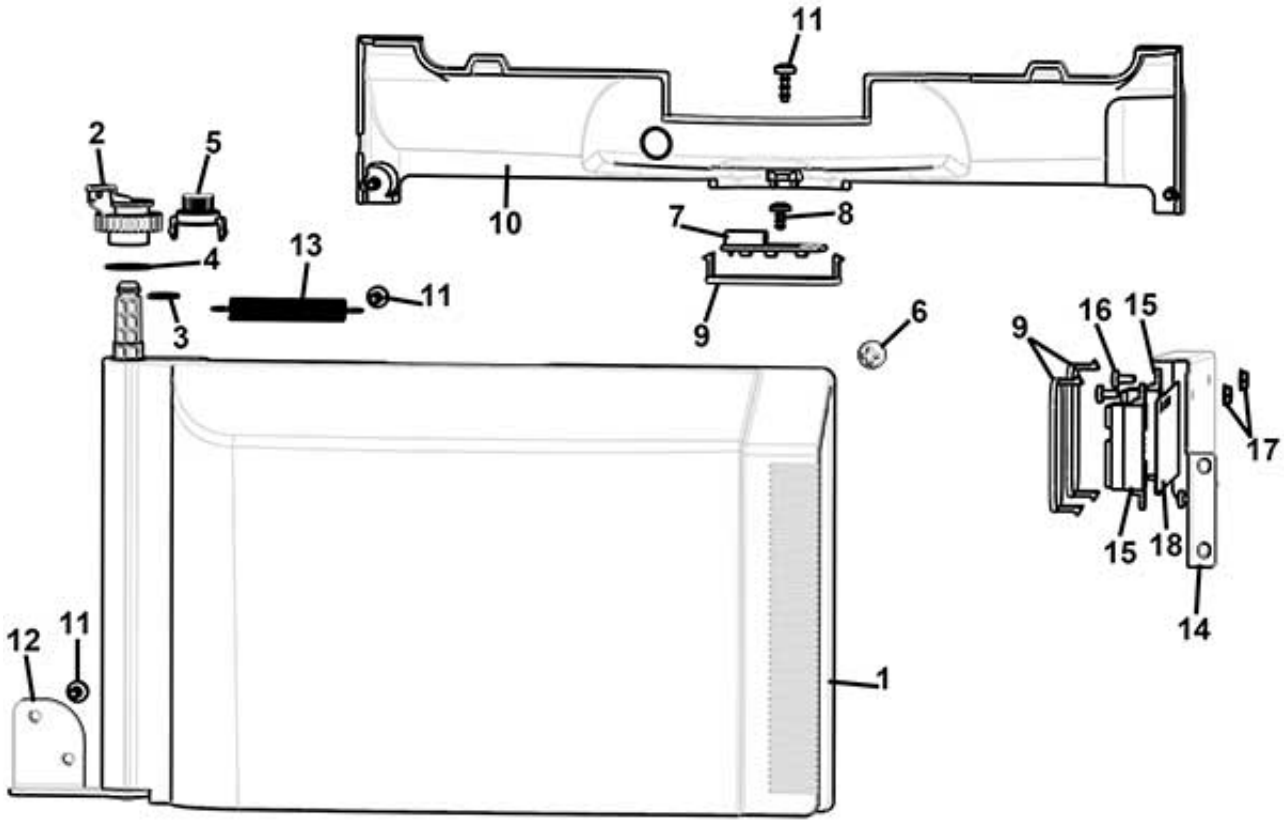

www.rheavendors.com tel: 0039 02 966 551 fax: 0039 02 96 55 086 email: rheavendors@rheavendors.com exclusive property of rheavendors group

CUPS STATION FLAP		
Pos.	**Code**	**Description**
1	Z0020043040TR	CUP STATION FLAP
2	Z0020043042	FLAP GEAR
3	VIT0006505	RING 6
4	VIT0003312	WASHER 10x16x0,5
5	Z0020043049	FLAP RETARDER
6	Z0020040235	FLAP PLUG
7	SCH0009520	CUPS STATION LIGHTING BOARD
8	VIT0002009	SCREW ST HEAD CAP M3.5X6.5
9/a	Z0020042251PM	BLUE PLEXIGLASS SENSOR
9/b	Z0020042251	TRANSPARENT PLEXIGLASS SENSOR
10	Z0020043031NA	DOOR LOWER COVER BLACK
11	VIT0002469	SCREW HEAD TAP M3.5X10
12	Z0020043041NA	FLAP SUPPORT
13	Z0020043048	FLAP CLOSING SPRING
14	Z0020043044NA	SENSOR SUPPORT
15	ELT0006813	DISTANCE SENSOR
16	VIT0000002	SCREW HEAD TAP CAP M3X6
17	VIT0004701	NUT M3
18	Z0020043047	SENSOR ADHESIVE

www.rheavendors.com tel: 0039 02 966 551 fax: 0039 02 96 55 086 email: rheavendors@rheavendors.com exclusive property of rheavendors group

TURRET DB SUPPORT

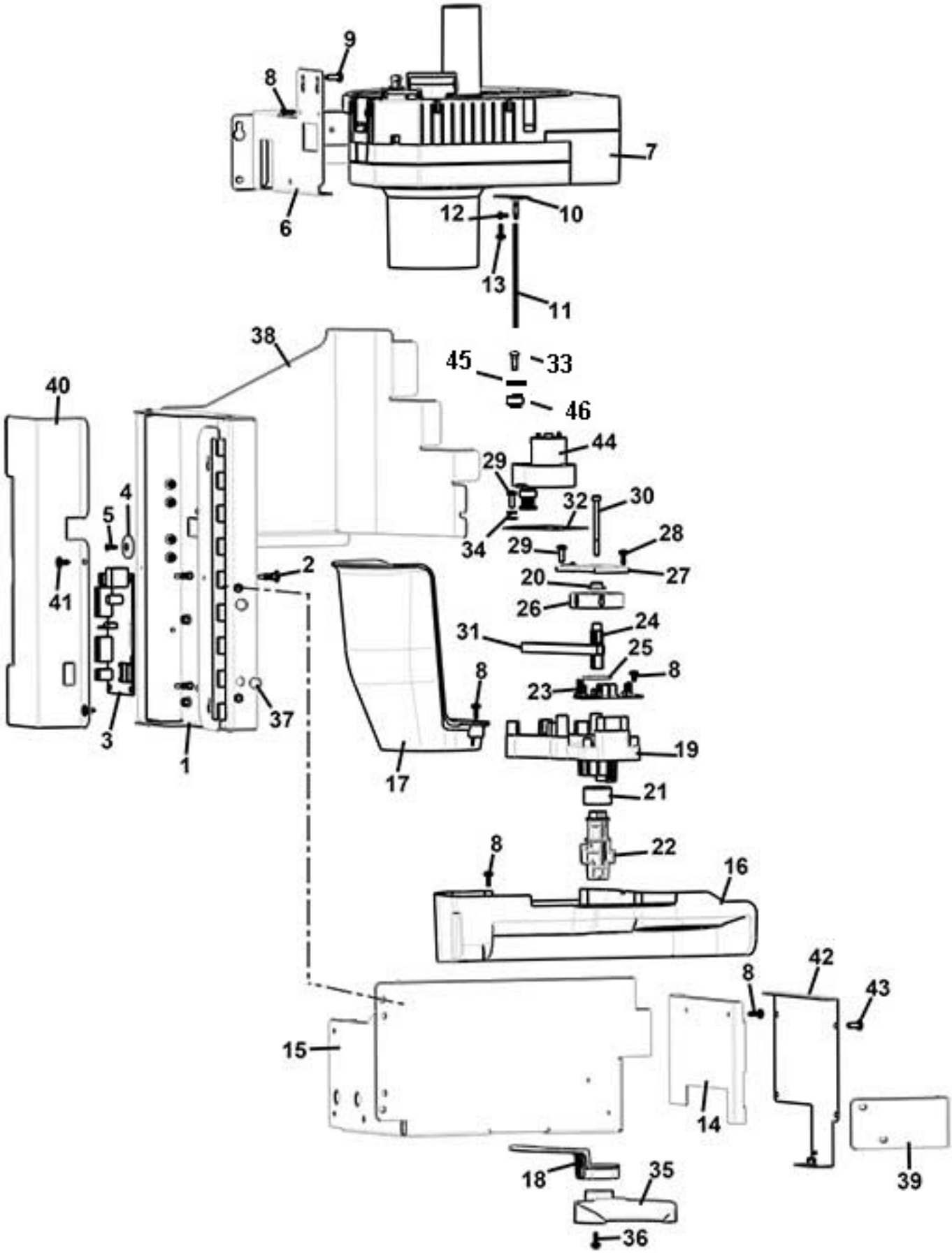

www.rheavendors.com tel: 0039 02 966 551 fax: 0039 02 96 55 086 email: rheavendors@rheavendors.com exclusive property of rheavendors group

TURRET DB SUPPORT		
Pos.	**Code**	**Description**
1	Z0190014005-09NA	SUPPORT DB BLACK
2	ELE0062020	BOARD SUPPORT
3	SCH0009601	KEYPAD BOARD
4	H00017067	MAGNET 20X3,2 SP3
5	VIT0002113	SCREW COUNT FLAT HEAD M2.9X9,5
6	Z0190014011NA	UPPER DB SUPPORT BLACK
7		See table cups loader
8	VIT0002469	SCREW HEAD TAP M3.5X10
9	VIT0000014	SCREW HEAD TAP CAP M4X16
10	Z0190014039	D.80 CUP SLOW MOTION SUPPORT
11	Z0190014042	CUP SLOW MOTION
12	VIT0000002	SCREW HEAD TAP CAP M3X6
13	VIT0002009	SCREW ST HEAD CAP M3.5X6.5
14/a	Z0190014036NA	STIRRER DISP. SUP. D.80 BLACK
14/b	Z0190014018NA	STIRRER SUPPORT 70/73
15/a	Z0190014034NA	LOWER DB SUPPORT D.80 (BLACK)
15/b	Z0190014016NA	LOWER SUPPORTO DB 70-73
16	Z0020043050NA	CUP STATION (BLACK)
17	Z0190014017NA	CUP CHUTE (BLACK)
18	Z0190014029NA	CUP STOP (BLACK)
19	Z0190014051NAR	§ FORK SUPPORT (BLACK)+INSERT
20	VIT0009330	BEARING D.8
21	VIT0009327	BEARING
22	Z0190014026NAR	§ FORK SHAFT (BLACK)+INSERT
23	SCH0006940	TUBES SENSOR
24	Z0190014052	FORK PULLEY
25	Z0190014023	FORK SHAFT SPACER
26	Z0190014054NA	OPTIC READER DISC (BLACK)
27	Z0190014053-02	FORK SHAFT PLATE
28	VIT0002469	SCREW HEAD TAP M3.5X10
29	VIT0000013	SCREW HEAD TAP CAP M4X12
30	VIT0005544	SCREW ALLEN M4X50
31	Z0190014025	TOOTHED BELT
32	Z0190014055-03	FORK MOTOR REINFORCEMENT
33	VIT0001010	M 3x12 TCB SCREW
34	VIT0003107	SPRING WASHER 4,3
35/a	Z0190014032NA	CUPS FORK D.80
35/b	Z0190014030NA	CUPS FORK D.70
35/c	Z0190014031NA	FORK D.73 (BLACK)
36	VIT0000030	SCREW HEAD TAP CAP M4X7
37	Z0020040235	FLAP PLUG
38/a	Z0190014033NA	DB UPPER COVER D.80 (BLACK)
38/b	Z0190014014NA	LID SUPPORT DB 70/73
39	Z0190014013NA	STIRRERS CHUTE REINFORC. BLACK
40	Z0190014040NA	DB BOARD COVER
41	VIT0002401	SCREW ST HEAD CAP M3.5X9.5
42/a	Z0190014048NA	DB SUPPORT COVER D.80 (BLACK)

www.rheavendors.com tel: 0039 02 966 551 fax: 0039 02 96 55 086 email: rheavendors@rheavendors.com exclusive property of rheavendors group

TURRET DB SUPPORT		
42/b	Z0190014046NA	DB SUPPORT COVER D.70 (BLACK)
43	VIT0000012	SCREW HEAD TAP CAP M4X10
44	Z0090002047R2	§MOTOR 18RPM 24V+PULLEY+REINF. Includes pos. 44 + 45 + 46 + 32 + 33
45	VIT0003108	WASHER TAB D. 3.2
100	Z0190014050R	§ CUP FORK MOVEMENT From pos. 19 to pos. 34 and 44
46	0190014057	

www.rheavendors.com tel: 0039 02 966 551 fax: 0039 02 96 55 086 email: rheavendors@rheavendors.com exclusive property of rheavendors group

cups loader

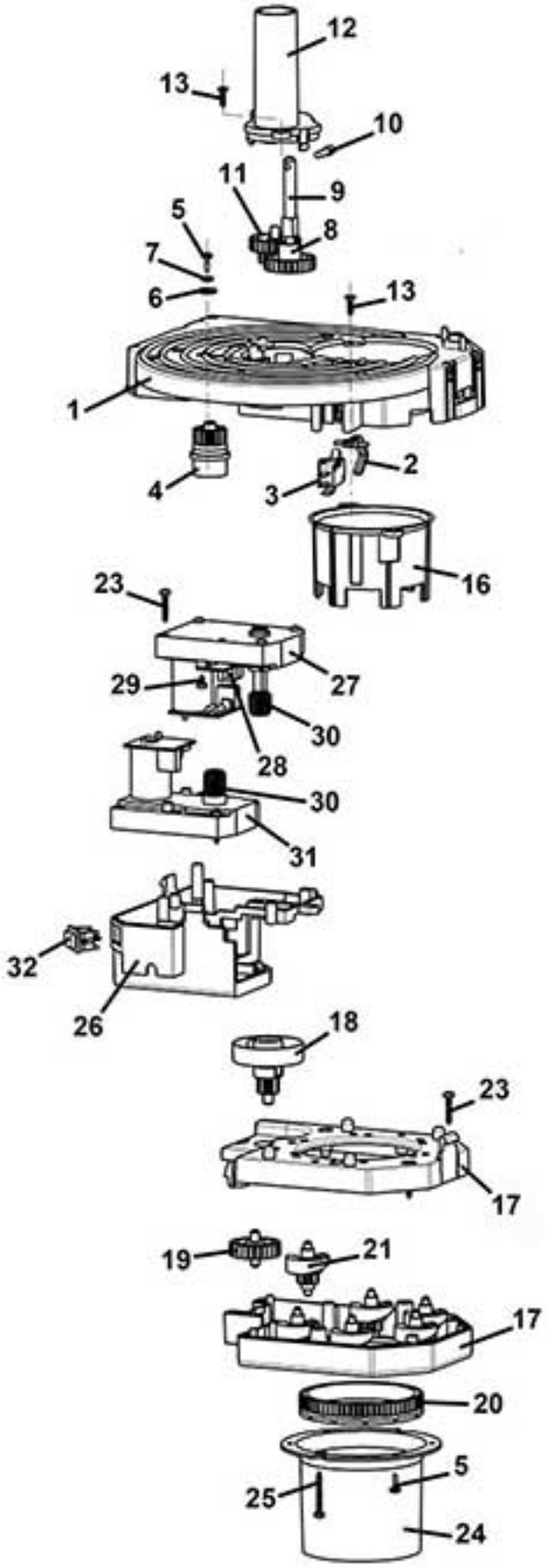

www.rheavendors.com tel: 0039 02 966 551 fax: 0039 02 96 55 086 email: rheavendors@rheavendors.com exclusive property of rheavendors group

cups loader		
Pos.	**Code**	**Description**
1	Z0190006534CY-03	TURRET SUPPORT RAL9018
2/a	Z0190006543-01	MICROSWITCH LEVER WHITE
2/b	Z0190006556KA	MICROSWITCH LEVER RAL3020
3	ELE0001530	MICROSWITCH 3A 125-250VA
4	Z0190006546	CUP DISPENSER MOTOR CONNECTOR
5	VIT0002469	SCREW HEAD TAP M3.5X10
6	VIT0003301	WASHER 4,3X12X1,5
7	VIT0003103	SPRING WASHER 4,3
8	Z0190006503	Z26 WHEEL TURRET (WHITE)
9	Z0190006564	TURRET SHAFT
10	VIT0005203	DOWEL PIN 4X18
11	Z0190006544	Z16 PINION WHITE
12	Z0190006537CY	TURRET CUP CONNEC. 4C. RAL9018
13	VIT0002101	SCREW COUNT FLAT HEAD M3.5X13
16/a	Z0190006538CF	CUPS REDUCER D.70 RAL7016
16/b	Z0190006539CY	CUPS REDUCER D.73 RAL9018
17	Z0190006521CYR	LOWER/UPPER CUP DROP MECH.
18	Z0190006511NA	CUPS TURRET SPINDLE BLACK
19	Z0190006528	Z26 WHEEL WHITE
20/a	Z0190006523	TOOTHED RING NUT D.70/73
20/b	Z0190006507	TOOTHED RING NUT D.78/80 WHITE
21/a	Z0190006506IC	SPLIT UP D.70/78-ORANGE PL
21/b	Z0190006502	CUP SPLITTER D.73/80 PP WHITE
21/c	Z0190006551GJ	SPLIT UP D.70/78-YELLOW PP
21/d	Z0190006509PL	SPLIT UP D.80 MULTISTEP BLU
23	VIT0002456	SCREW HEAD TAP M3.5X25
24	Z0190006514CY	CUPS CHUTE 70/73 RAL9018
25	VIT0002468	SCREW HEAD TAP M3.5X30
26	Z0190006522CY	MOTOR SUPPORT RAL9018
27	Z0090002114R2	§ GEARBOX MOTOR 11RPM 24V DC
28	SCH0007000	SPLIT UP SENSOR
29	VIT0002002	SCREW ST HEAD CAP M3.5X6.5
30	Z0190006518	TOOTHED SHAFT Z18 WHITE
31	Z0090002123R	§ GEARBOX MOTOR 5,5RPM 24V DC
32	ELE0002258CL	§ PUSH BUTTON RED
100/a	Z0190006534CL3R	§ TURRET SUPP-4COLUMNS D.70/73 From pos.1 to pos.13 (included pos.2/a) Up to serial 20204799999
100/b	Z0190006534CL4R	§ TURRET SUPPORT-4COLUMNS D.80 From pos.1 to pos.13 (included pos.2/b) Up to serial 20204799999
101/a	Z0190006520CLR	§ CUP DROP MECH. D.70-PL From pos. 17 to pos.23 (included pos.20/a+21/a)
101/b	Z0190006520CL0R	§ CUP DROP MECH. D.70-PP From pos. 17 to pos.23 (included pos.20/a+21/c)
101/c	Z0190006520CL2R	§ CUP DROP MECH. D.73-PP From pos. 17 to pos.23 (included pos.20/a+21/b)
101/d	Z0190006521CL5R	§ CUP DROP MECH. D.80-PP From pos. 17 to pos.23 (included pos.20/b+21/b)
102	Z0190006522CLR	§ CUPS DISPENSER MOTOR SUPPORT From pos.26 to pos. 32 Up to serial 20204799999

www.rheavendors.com tel: 0039 02 966 551 fax: 0039 02 96 55 086 email: rheavendors@rheavendors.com exclusive property of rheavendors group

CUPS LOADER with DOUBLE SWITCH

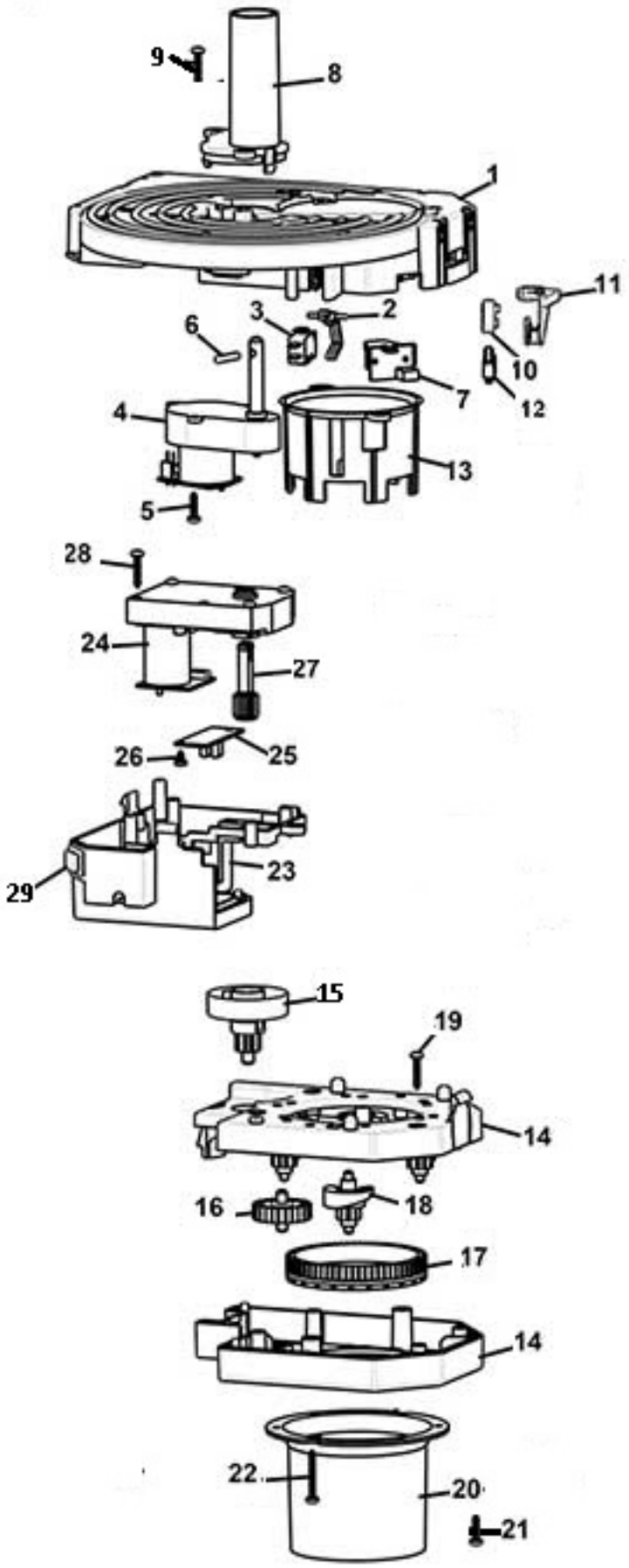

www.rheavendors.com tel: 0039 02 966 551 fax: 0039 02 96 55 086 email: rheavendors@rheavendors.com exclusive property of rheavendors group

CUPS LOADER with DOUBLE SWITCH		
Pos.	**Code**	**Description**
1	Z0190006581CI	TURRET SUPPORT RAL 7042
2/a	Z0190006543-01	MICROSWITCH LEVER WHITE
2/b	Z0190006556KA	MICROSWITCH LEVER RAL3020
3	ELE0001530	MICROSWITCH 3A 125-250VA
4	Z0090002043R	§ MOTOR GEAR+BOARD
5	VIT0002469	SCREW HEAD TAP M3.5X10
6	VIT0005223	PIN 4X18 DIN 1475
7	SCH0007021	MOTOR FILTER
8	Z0190006537CY	TURRET CUP CONNEC. 4C. RAL9018
9	VIT0002101	SCREW COUNT FLAT HEAD M3.5X13
10	Z019A111001CI	MICRO SWITCH ACT. 0° DEGREES
11	Z019A111002CI	MICRO SUPPORT
12	CBLLZ00064	WIRED COLUMN MICROSWITCHG
13/a	Z0190006538CF	CUPS REDUCER D.70 RAL7016
13/b	Z0190006539CY	CUPS REDUCER D.73 RAL9018
14	Z0190006521CYR	LOWER/UPPER CUP DROP MECH.
15	Z0190006511NA	CUPS TURRET SPINDLE BLACK
16	Z0190006528	Z26 WHEEL WHITE
17/a	Z0190006523	TOOTHED RING NUT D.70/73
17/b	Z0190006507	TOOTHED RING NUT D.78/80 WHITE
18/a	Z0190006506IC	SPLIT UP D.70/78-ORANGE PL
18/b	Z0190006502	CUP SPLITTER D.73/80 PP WHITE
18/c	Z0190006551GJ	SPLIT UP D.70/78-YELLOW PP
18/d	Z0190006509PL	SPLIT UP D.80 MULTISTEP BLU
18/e	Z0190006512NA	SPECIAL PAWL Ø 80
19	VIT0002456	SCREW HEAD TAP M3.5X25
20	Z0190006514CY	CUPS CHUTE 70/73 RAL9018
21	VIT0002469	SCREW HEAD TAP M3.5X10
22	VIT0002468	SCREW HEAD TAP M3.5X30
23	Z0190006522CY	MOTOR SUPPORT RAL9018
24	Z0090002114R2	§ GEARBOX MOTOR 11RPM 24V DC
25	SCH0007000	SPLIT UP SENSOR
26	VIT0002002	SCREW ST HEAD CAP M3.5X6.5
27	Z0190006518	TOOTHED SHAFT Z18 WHITE
28	VIT0002025	SCREW ST HEAD CAP M3.5X22
29	ELE0002258	PUSH BUTTON RED
100/a	Z0190006534CL13R	§TURRET SUPP. 4C D.70/73 PD DS From pos.1 to pos.12 from serial 20204800000
100/b	Z0190006534CL14R	§ TURRET SUPP. 4C D.80 PD DS From pos.1 to pos.12 from serial 20204800000
101/a	Z0190006520CLR	§ CUP DROP MECH. D.70-PL From pos. 14 to pos. 19
101/b	Z0190006520CL0R	§ CUP DROP MECH. D.70-PP From pos. 14 to pos. 19
101/c	Z0190006520CL2R	§ CUP DROP MECH. D.73-PP From pos. 14 to pos. 19
101/d	Z0190006521CL5R	§ CUP DROP MECH. D.80-PP From pos. 14 to pos. 19
101/e	Z0190006521CL12R	§ CUP DROP MECH. D.80-PP BLUE From pos. 14 to pos. 19
101/f	Z0190006521CL19R	§ CUP DROP MECH. D.80-PP BLACK From pos. 14 to pos. 19
102	Z0190006522CL1R	§ GEARS DB TURRET SUPPORT From pos. 23 to pos. 29 from serial 20204800000

www.rheavendors.com tel: 0039 02 966 551 fax: 0039 02 96 55 086 email: rheavendors@rheavendors.com exclusive property of rheavendors group

4 columns cups turret

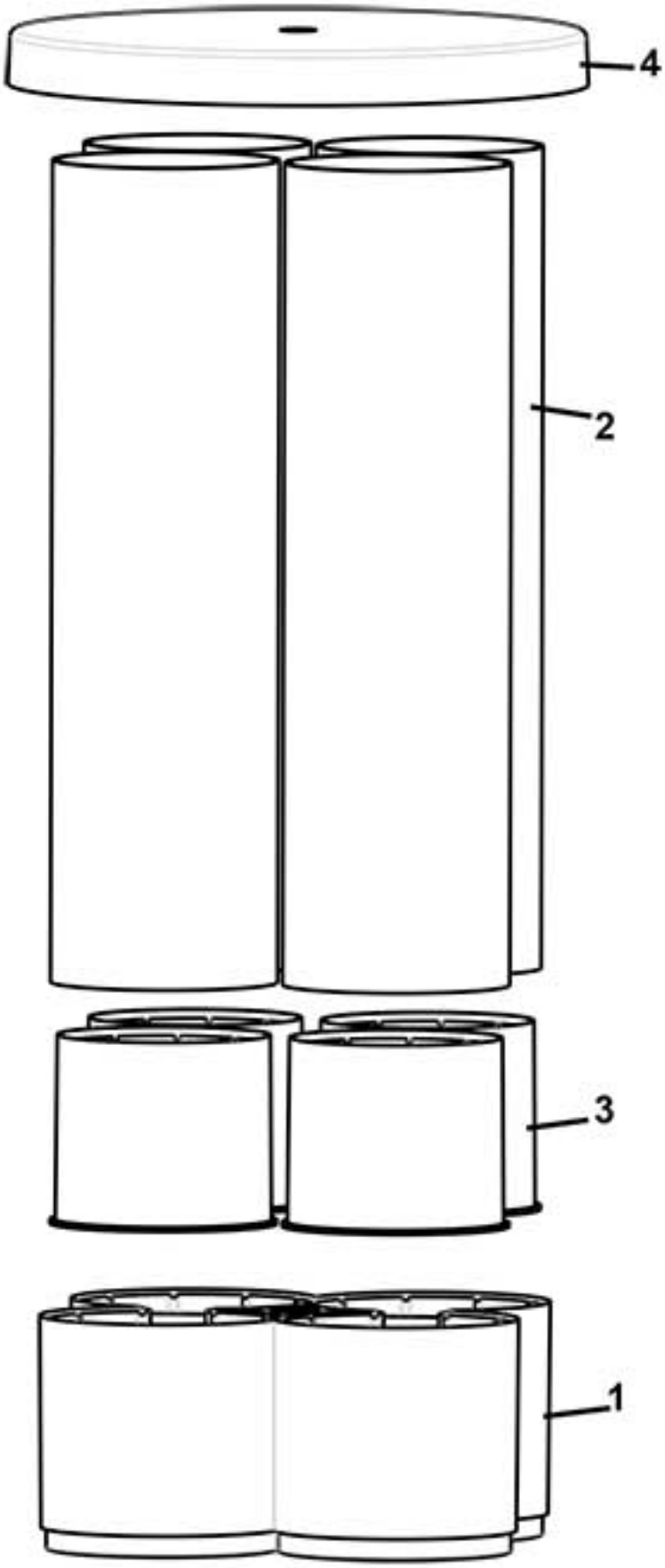

www.rheavendors.com tel: 0039 02 966 551 fax: 0039 02 96 55 086 email: rheavendors@rheavendors.com exclusive property of rheavendors group

4 columns cups turret		
Pos.	**Code**	**Description**
1/a	Z0180013305CY	CUP TURRET SPINDLE 4C RAL 9018 Up to serial 20204799999
1/b	Z0180013307CY	CUP TURRET SPINDLE 4C D.80 Up to serial 20204799999
1/c	Z018A111013CY	CUP TURRET SPINDLE 4C D70 9018 from serial 20204800000
1/d	Z018A111012CY	CUP TURRET SPINDLE 4C D80 9018 from serial 20204800000
2/a	Z0180013146	CUP HOLDER D.84/81MM L305MM
2/b	Z0180013351	CUP HOLDER D.87/84MM L288MM
3	Z0180013113	D.70 COLUMN REDUCTION (WHITE)
4/a	Z0180013308CY	CUPS TURRET LID 4C. RAL 9018
4/b	Z0180013311CY	CUPS TURRET LID 4C D80 RAL9018
100	Z0180013145R	CUP TURRET 4C D.70/73 Up to serial 20204799999
101	Z0180013350R	§ CUP TURRET 4C D.80 Up to serial 20204799999
102	Z0180013145R0	CUP TURRET 4C D.70/73 from serial 20204800000
103	Z0180013350R0	§ CUP TURRET 4C D.80 from serial 20204800000

www.rheavendors.com tel: 0039 02 966 551 fax: 0039 02 96 55 086 email: rheavendors@rheavendors.com exclusive property of rheavendors group

stirrer dispenser

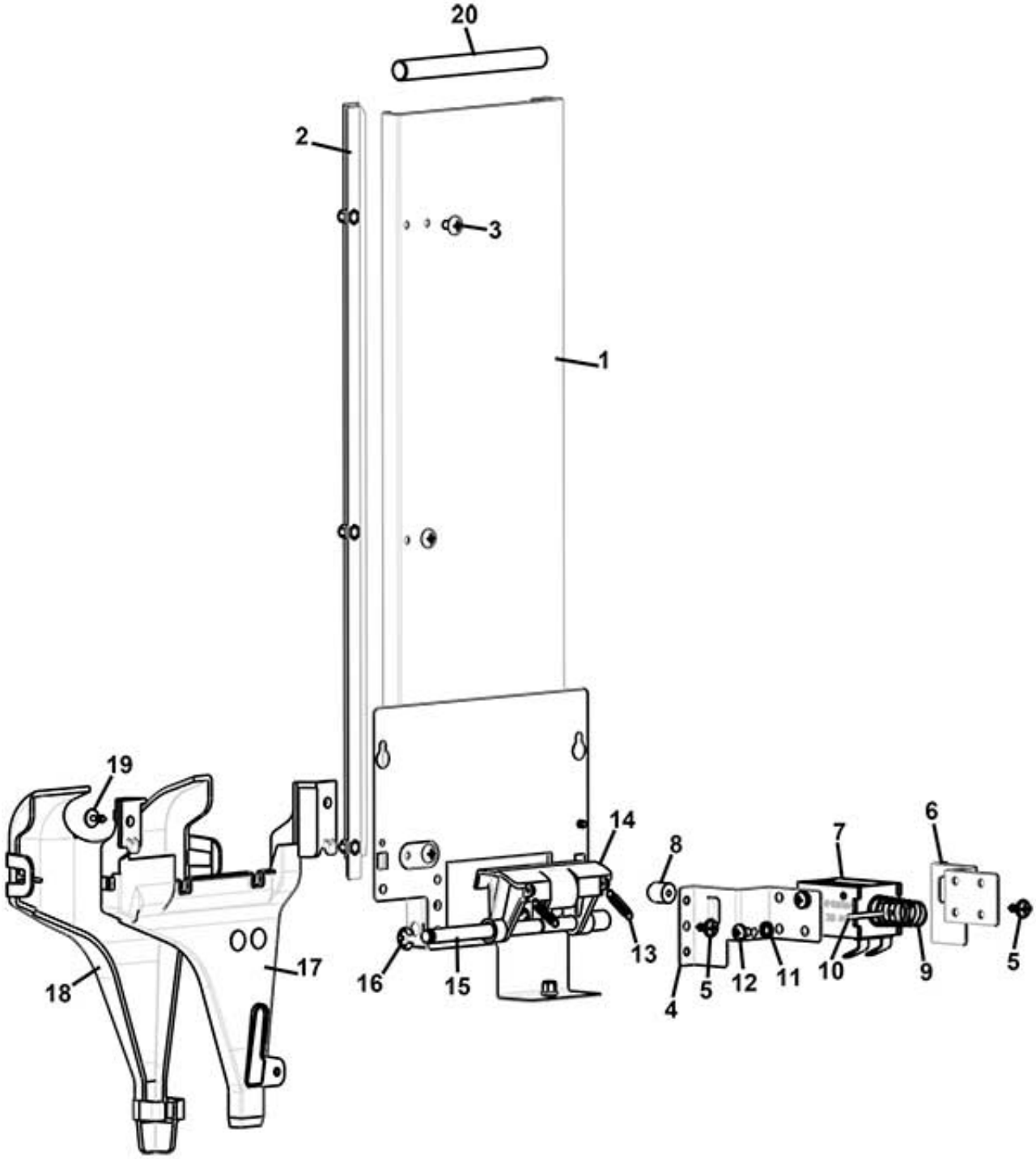

www.rheavendors.com tel: 0039 02 966 551 fax: 0039 02 96 55 086 email: rheavendors@rheavendors.com exclusive property of rheavendors group

stirrer dispenser		
Pos.	**Code**	**Description**
1	Z0450003555	STIRRER DISPENSER
2	Z0450003560	STIRRER DISPENSER GUIDE
3	VIT0000012	SCREW HEAD TAP CAP M4X10
4	Z0450003559	ELETTROMAGNET R.H. SUPPORT
5	VIT0002009	SCREW ST HEAD CAP M3.5X6.5
6	Z0450003558	ELETTROMAGNET L.H. SUPPORT
7	ELE0000062	15% 24VDC ELECTROMAGNET W/FAST
8	Z0190014038	ELETTTROMAGNET PIN
9	Z0380011419	SPRING
10	VIT0005212	DOWEL PIN 2.5X24
11	VIT0003103	SPRING WASHER 4,3
12	VIT0000021	SCREW HEAD TAP CAP M4X6
13	Z0450003010	SPRING
14	Z0450003565NA	STIRRER EJECTOR BLACK
15	Z0450003566	STIRRER EJECT SHAFT
16	VIT0006504	RING 5
17	Z0450003571TR	TRASPARENT STICKS CHUTE
18	Z0450003572TR	TRASPARENT STICKS CHUTE COVER
19	VIT0002401	SCREW ST HEAD CAP M3.5X9.5
20/a	4001012030	STIRRER WEIGHT 89MM
20/b	Z0450003033	STIRRER WEIGHT 104MM
100	Z0450003550CL	§ STIRRER DISPENSER 89-104-115

www.rheavendors.com tel: 0039 02 966 551 fax: 0039 02 96 55 086 email: rheavendors@rheavendors.com exclusive property of rheavendors group

mixer

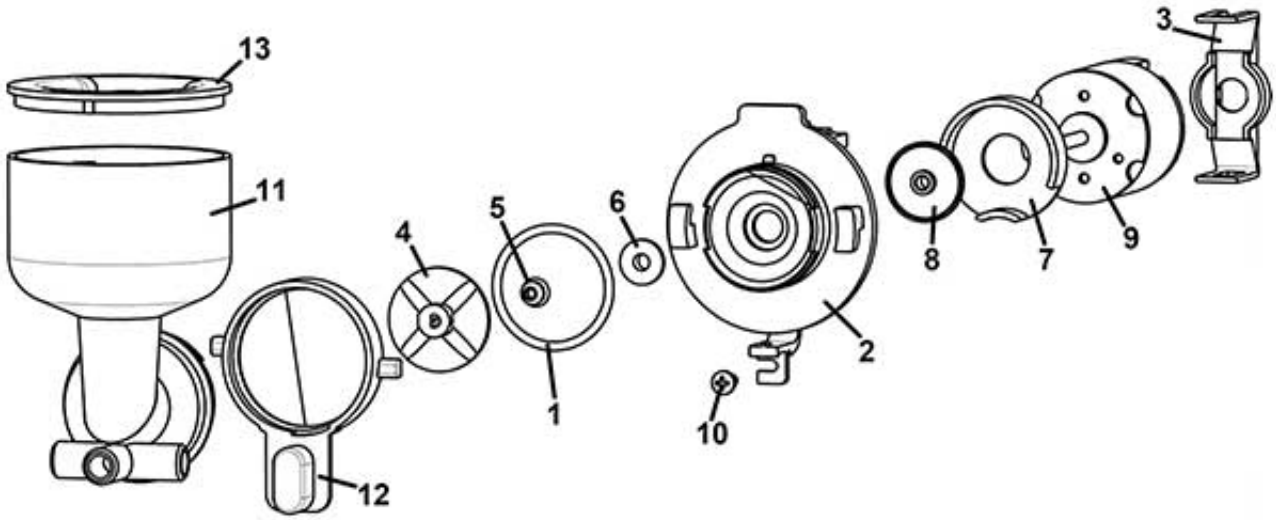

www.rheavendors.com tel: 0039 02 966 551 fax: 0039 02 96 55 086 email: rheavendors@rheavendors.com exclusive property of rheavendors group

mixer		
Pos.	**Code**	**Description**
1	GUA0000084	OR 3131 RED SILICONE A60
2	Z0080100005	MOTOR MIXER BASE
3	Z0080100009IC	MIXER MOTOR SUPPORT RAL2011
4	Z0080100251NA	MIXER FUN
5	Z0080100102	MIXER SHAFT GASKET
6	Z0080100015	MIXER BUSH
7	Z0080100023IC	MIXER COVER RAL2011
8	Z0080100024	MIXER FAN
9	Z0090003023	MIXER MOTOR 24V DC SHAFT D.4
10	VIT0002401	SCREW ST HEAD CAP M3.5X9.5
11/1a	Z0080200101L	MIXING BOWL L.W/H20 BREAKER
11/1b	Z0080200102R	MIXING BOWL R.W/H20 BREAKER
11/1c	Z0080200103C	MIXING BOWL F.W/H20 BREAKER
11/2a	Z0080200110L	MIXING BOWL L.W/H20 BREAKER
11/2b	Z0080200111R	MIXING BOWL R.W/H20 BREAKER
11/2c	Z0080200112C	MIXING BOWL F.W/H20 BREAKER
12	Z0080100006IC	LOCK RING RAL2011
13/a	Z0080100008	UPPER RING
13/b	Z0080100042	MIXER RING W/PIPE X4,25 BLACK
100	Z0080100001R1	§ MIXER BOWL BASE+MOTOR (from pos.1 to pos.9)

www.rheavendors.com tel: 0039 02 966 551 fax: 0039 02 96 55 086 email: rheavendors@rheavendors.com exclusive property of rheavendors group

INSTANT BOILER

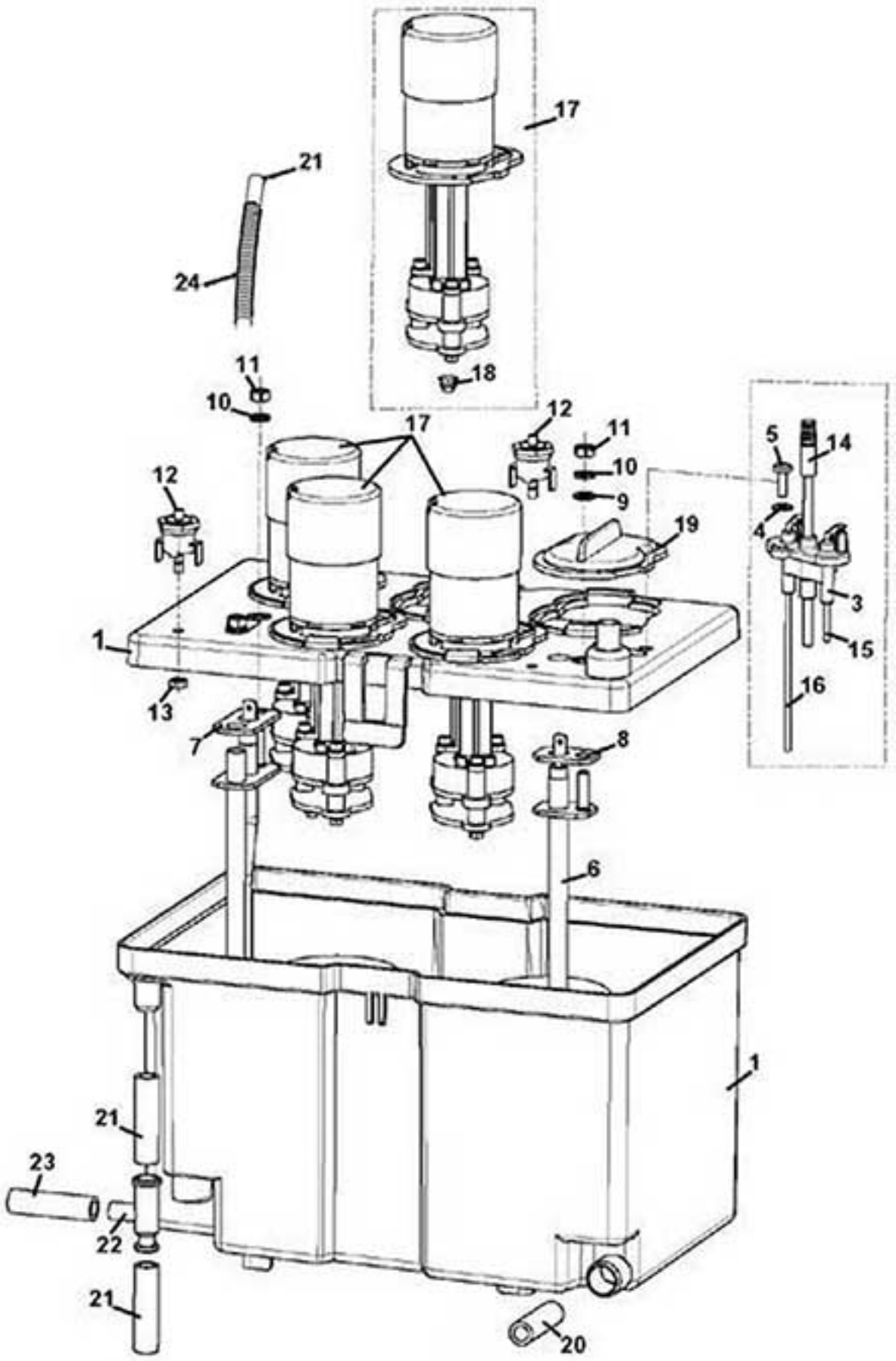

www.rheavendors.com tel: 0039 02 966 551 fax: 0039 02 96 55 086 email: rheavendors@rheavendors.com exclusive property of rheavendors group

INSTANT BOILER		
Pos.	**Code**	**Description**
1	Z0600014111R	§ TANK+BOILER COVER
3	Z0600016089	PROBE SUPPORT
4	VIT0003211	WASHER 4,3X9X0,8
5	VIT0001005	SCREW HEAD TAP CAP M4X12
6	Z0600016138R	§ HEATING ELEMENT 1600W 230V
7	Z0600014113-02	HEATING ELEM GASKET
8	Z0600014114-01	BOILER STRENGHT GASKET 5P
9	VIT0003203	WASHER 5,3X10X1
10	VIT0003111	SPRING WASHER 5,3
11	VIT0004804	NUT M5
12	ELE0000965	CLIXSON 88°
13	VIT0004816	NUT M4
14	ELE0000978R	SOLUBLES PROBE 80MM
15	Z0600016054	MAXIMUM LEVEL PROBE
16	Z0600016053	MINIMUM LEVEL PROBE
17	Z0600016405R	§ BOILER PUMP
18	Z0080100102	MIXER SHAFT GASKET
19	Z0600016422	PUMP LID
20/a	TSIL10/14T-10	SILICON HOSE 10X14 MT.10
20/b	TSIL10/14T-50	SILICON HOSE 10X14 MT.50
21/a	TSIL07/11T-10	SILICON HOSE 7X11 MT.10
21/b	TSIL07/11T-50	SILICON HOSE 7X11 MT.50
22	Z0600016028	T CONNECTOR
23/a	TSIL05/08T-10	SILICON HOSE 5X8 MT.10
23/b	TSIL05/08T-50	SILICON HOSE 5X8 MT.50
24	Z0010020063	NOZZLE SPRING D.7/11
100	Z0600014201CL4	§ BOILER PLUMBED 4PUMP 230V

www.rheavendors.com tel: 0039 02 966 551 fax: 0039 02 96 55 086 email: rheavendors@rheavendors.com exclusive property of rheavendors group

products container

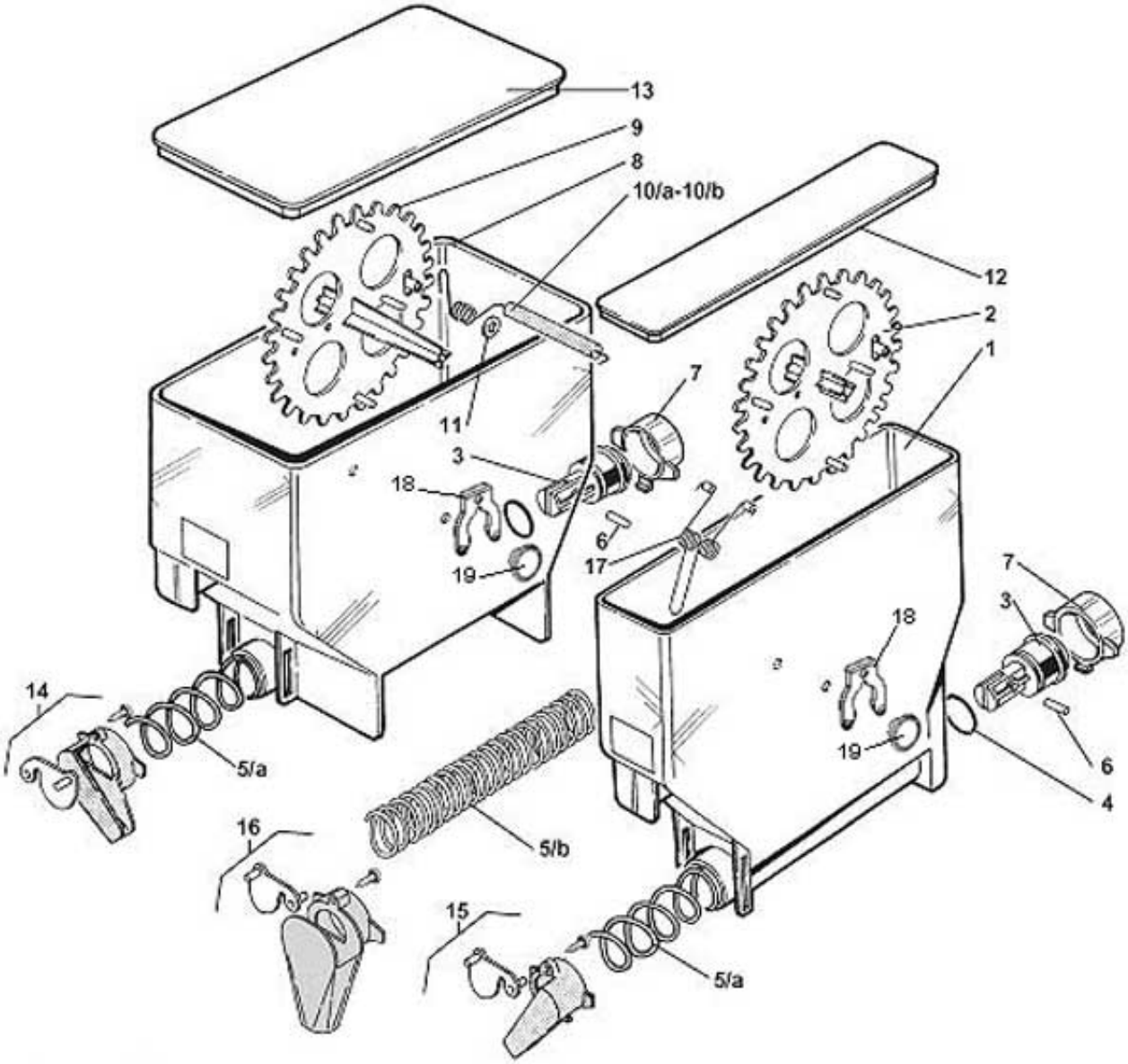

www.rheavendors.com tel: 0039 02 966 551 fax: 0039 02 96 55 086 email: rheavendors@rheavendors.com exclusive property of rheavendors group

products container		
Pos.	**Code**	**Description**
1	Z0230030233	INGREDIENT CANISTER 54 265
2	Z0230030236AB	§ WHEEL MM54
3	Z0230030012	SPIRAL PIN
4	GUA0000083	OR 123 RED SILICONE A70
5/a	Z0230030014	SPIRAL 18
5/b	Z0230030013	SPIRAL 9
6	VIT0005106	PIN 2X14
7	Z0230030011	REAR BUSH
8	Z0230030234	§ CANISTER 110-265 W/PIN
9	Z0230030237AB	§ WHEEL MM110
10/a	Z0230030064	AGITATOR 112 - RIGHT OUTLET
10/b	Z0230030062	AGITATOR 112 - LEFT OUTLET
11	VIT0003210	WASHER 8,4X16X1,6
12	Z0230030006	CANISTER 55 LID
13	Z0230030009	CANISTER 112 LID
14/1a	Z0230030198R	§ INGRED. CHUTE-RIGHT ORANGE
14/2a	Z0230030058R	§ INGRED. CHUTE-RIGHT ORANGE
14/1b	Z0230030187R	§ INGREDIENT CHUTE-RIGHT RED
14/2b	Z0230030044R	§ INGREDIENT CHUTE-RIGHT RED
15/1a	Z0230030197R	§ INGREDIENT CHUTE-LEFT ORANGE
15/2a	Z0230030057R	§ INGREDIENT CHUTE-LEFT ORANGE
15/1a	Z0230030186R	§ INGREDIENT CHUTE-LEFT RED
15/2b	Z0230030043R	§ INGREDIENT CHUTE-LEFT RED
16/1a	Z0230030199R	§ INGRED. CHUTE-FRONTALORANGE
16/2a	Z0230030059R	§ INGRED. CHUTE-FRONTALORANGE
16/1b	Z0230030188R	§ INGREDIENT CHUTE-FRONTAL RED
16/2b	Z0230030055R	§ INGREDIENT CHUTE-FRONTAL RED
17	Z0230030060-05	PRODUCT AGITATOR
18	Z0230030239	WHEEL PIN FORK
19	Z0230030238-02	WHEEL PIN
100	Z0230030013CL	§ SPIRAL 9
101	Z0230030014CL	§ SPIRAL 18
102	Z0230030250R	§ CANIS. 54-265 WHEEL18 W/LID
103	Z0230030251R	§ CANIS. 54-265 WHEEL9 W/LID
104	Z0230030254R	§ CANIS. 54-265 SPIRAL9 W/LID
105	Z0230030260R	§ CAN. 110-265 AGIT.18 W/LID-R
107	Z0230030262R	§ CAN. 110-265 AGIT.18 W/LID-L
108	Z0230030233R	§ CANISTER 54-265 Pos. 1+2+18+19
109	Z0230030252R	§ CANIS. 54-265 AGIT.18 W/LID
110	Z0230030253R	§ CANIS. 54-265 AGIT.9 W/LID

www.rheavendors.com tel: 0039 02 966 551 fax: 0039 02 96 55 086 email: rheavendors@rheavendors.com exclusive property of rheavendors group