vending machine

file immagini/ricambi/copertine/rhea business line ec i.jpg NOT exists!!!!!!

spare parts manual

www.rheavendors.com tel: 0039 02 966 551 fax: 0039 02 96 55 086 email: rheavendors@rheavendors.com exclusive property of rheavendors group

cabinet

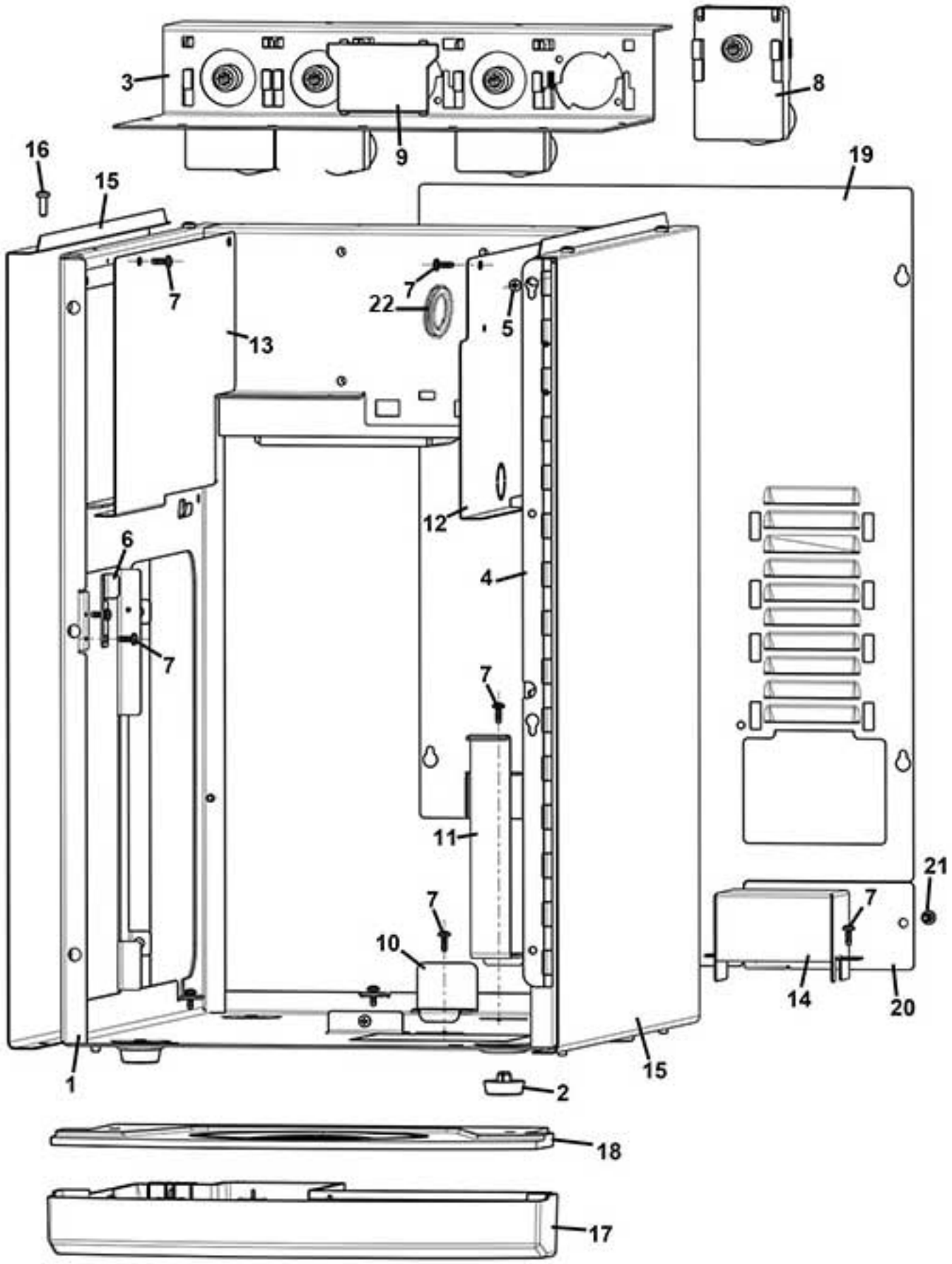

www.rheavendors.com tel: 0039 02 966 551 fax: 0039 02 96 55 086 email: rheavendors@rheavendors.com exclusive property of rheavendors group

cabinet		
Pos.	**Code**	**Description**
1	Z0010028249NA-05	CABINET (BLACK)
2	GUA0011011	MACHINE FOOT D.25
3	Z0010028289NA	5 GEARBOX MOTOR PLATE
4	Z0010028153-03	DOOR HINGE
5	VIT0002010	SCREW ST HEAD CAP M3.5X9.5
6	Z0010028284	DOOR CLOSING
7	VIT0002401	SCREW ST HEAD CAP M3.5X9.5
8	Z0090002113	MOTOR 24 DC 97 RPM
9	Z0010020029NA	GEARBOX MOTOR PLUG BLACK
10	Z0010020719	BOILER PLATE
11	Z0010028285	BOILER BRACKET
12	Z0010028177NA	RIGHT COVER
13	Z0010028287NA	LEFT COVER
14	Z0010028237	OUTLET COVER eC
15	Z0010028243NA	RIGHT-LEFT SIDE (BLACK)
16	VIT0000012	SCREW HEAD TAP CAP M4X10
17	Z0010028282CL	H2O DRIP TRAY
18	Z0010028281NA	H2O DRIP TRAY GRID RAL 9005
19	Z0010028172-03NA	REAR COVER RAL 9005
20	Z0010028239-01NA	BOILER OUTLET REAR DOOR BLACK
21	4060010126	PAYM SYSTEM FIXING SCREW
22	GUA0010503	ELECTRICAL GROMMET DG 29

www.rheavendors.com tel: 0039 02 966 551 fax: 0039 02 96 55 086 email: rheavendors@rheavendors.com exclusive property of rheavendors group

UPPER COVER

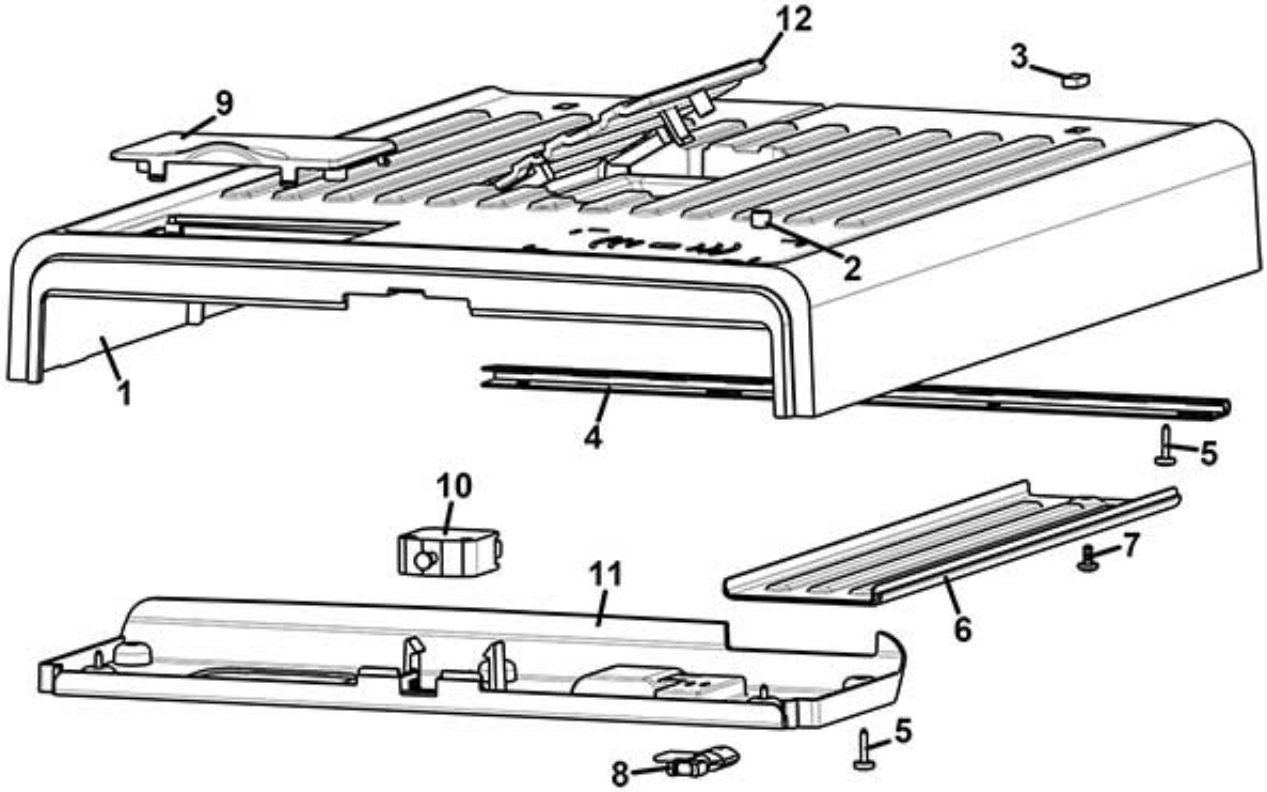

www.rheavendors.com tel: 0039 02 966 551 fax: 0039 02 96 55 086 email: rheavendors@rheavendors.com exclusive property of rheavendors group

UPPER COVER		
Pos.	**Code**	**Description**
1	Z0010028276NA	UPPER COVER RAL 9005
2	Z0010027344	RING PLUG
3	Z0010027343	PLUG SUPPORT COVER
4	Z0010028158	UPPER HINGE LID
5	VIT0002469	SCREW HEAD TAP M3.5X10
6	Z0010028280NA	CABLE COVER 9005
7	VIT0002475	SCREW HEAD TAP M3.5X8
8	Z0270011109IC	SERVICE KEY RAL2011
9	Z0010028279NA	DEKA LID RAL 9005
10	ELE0002019	SWITCH 16A 250V
11	Z0010028277NA	UPPER COVER CLOSING RAL 9005
12	Z0010028283NA	COVER (RAL 9005)

www.rheavendors.com tel: 0039 02 966 551 fax: 0039 02 96 55 086 email: rheavendors@rheavendors.com exclusive property of rheavendors group

rear cabinet

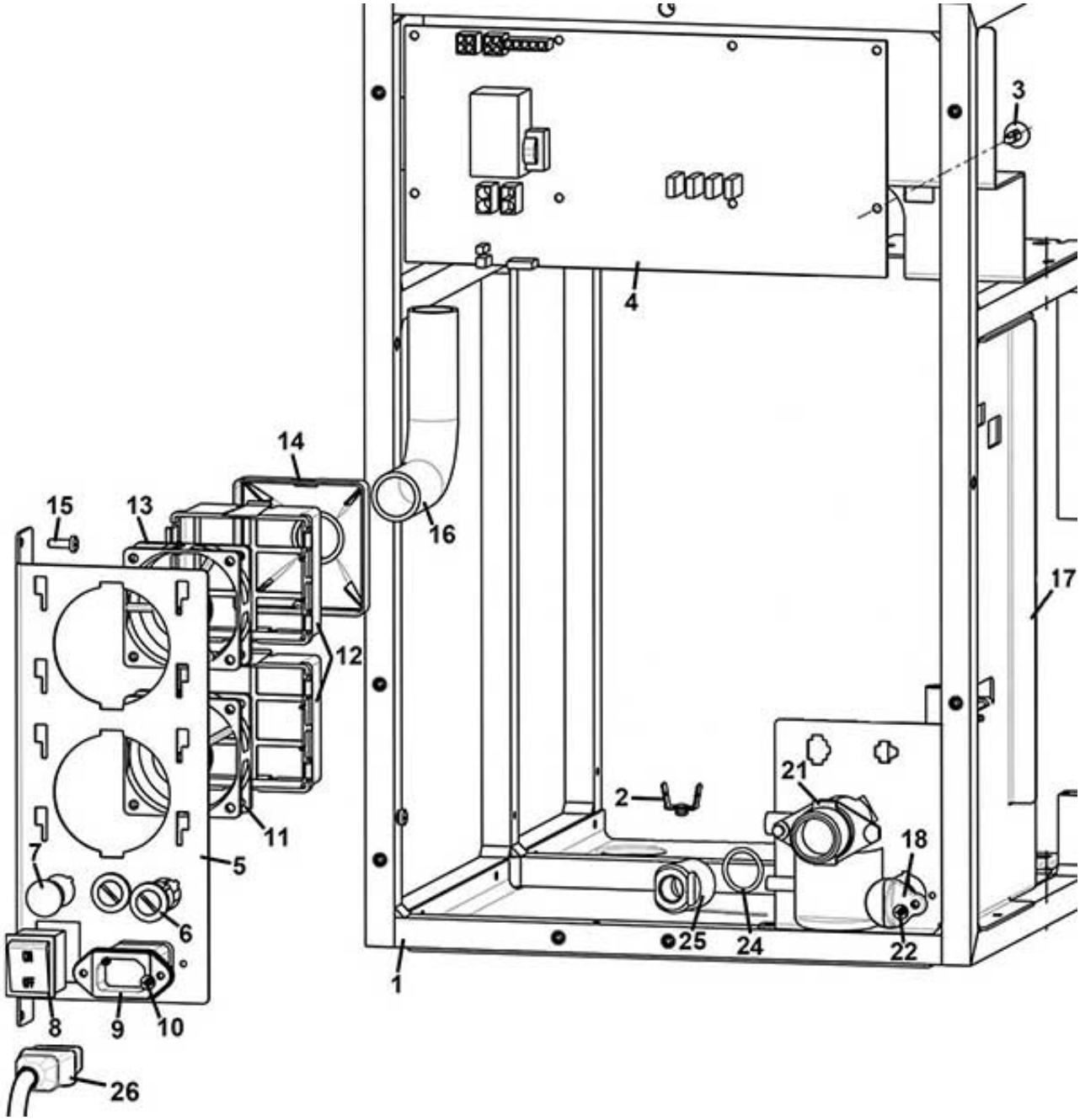

www.rheavendors.com tel: 0039 02 966 551 fax: 0039 02 96 55 086 email: rheavendors@rheavendors.com exclusive property of rheavendors group

rear cabinet		
Pos.	**Code**	**Description**
1	Z0010028249NA-05	CABINET (BLACK)
2	ELE0060520	GROUND PIN
3	ELE0062020	BOARD SUPPORT
4	SCH0008964-01	CPU/POWER BOARD
5	Z0130013061-03	ELECTRIC COMPONENT SUPP.
6	ELE0003508CL	FUSE HOLDER+FUSE 12A
7	GUA0011010	PLUG
8	ELE0002014CL3	BIPOLAR SWITCH 15A 250V
9	ELE0002315	MAINS SOCKET 115/250V 10A
10	VIT0002010	SCREW ST HEAD CAP M3.5X9.5
11	ELE0000462	FAN 24V DC-LOW SPEED
12	Z0010027064	FAN SUPPORT
13	ELE0000461	FAN 24V DC-HIGH SPEED
14	Z0010027065	FAN CONNECTOR
15	VIT0002401	SCREW ST HEAD CAP M3.5X9.5
16/a	TEOL000001CL1	EXTRACTOR TUBE D.20 170MM Up to serial 20244899999
16/b	TEOL000001CL7	EXTRACTOR TUBE D.20 130MM from serial 20244900000
17	Z0010028248-06	HYDRAULIC HOLDER
18	Z0600016455	H2O OUTLET PLUG
21	Z0110001058	WATER INLET VALVE 24V DC
22	VIT0002401	SCREW ST HEAD CAP M3.5X9.5
24	GUA0000021	OR 130 NBR AL 75 BLACK
25	Z0100006001-01	F/F CYLINDRIC 3/4-3/8 REDUCT.
26	ELE0055008	SUPPLY CABLE+PLUG+SCHUK.SOCKET

www.rheavendors.com tel: 0039 02 966 551 fax: 0039 02 96 55 086 email: rheavendors@rheavendors.com exclusive property of rheavendors group

DOOR

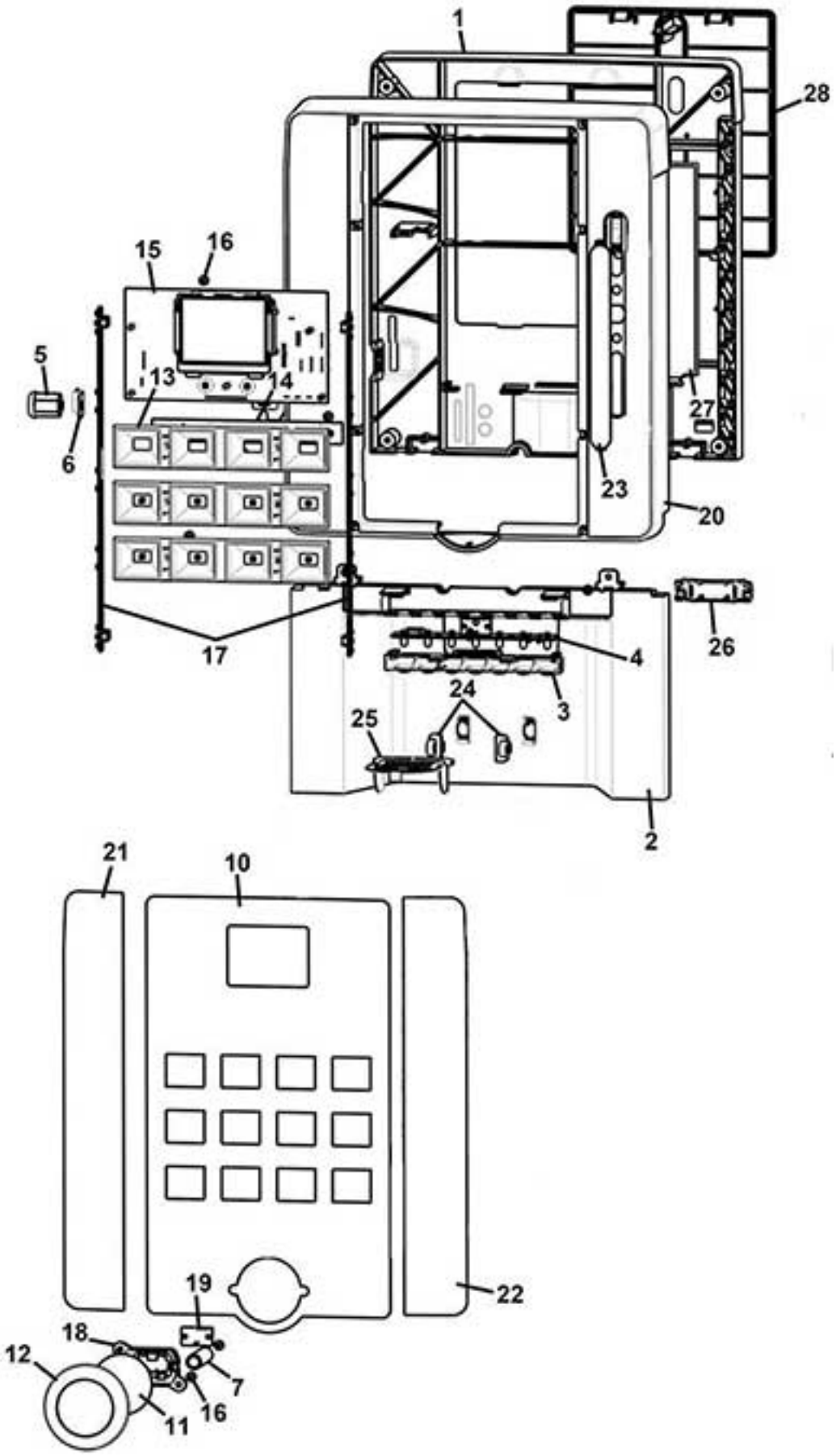

www.rheavendors.com tel: 0039 02 966 551 fax: 0039 02 96 55 086 email: rheavendors@rheavendors.com exclusive property of rheavendors group

DOOR		
Pos.	**Code**	**Description**
1	Z0020037671NA	DOOR STRUCTURE BLACK
2	Z0020037652NA	CUPS STATION FRAME RAL9005
3	Z0020039078TR	CUP STAT.ENLIGHTENMENT SUPPORT
4	SCH0008142	LIGHTING CUP STATION BOARD
5	SER0000028/1	LOCK INOX RVI MM20 C.3480
6	Z0010028157	LOCK PLATE
7	Z0020037673	SPACER D.12X9X52,5
10	1030000104R	§PLEX+CAP.KEYPD+BLACK PANEL
11	1030000297	BL LOGO
12	Z0020039084CL	§ DOOR LOGO FRAME CROMO
13	Z0020037675AB	LIGHT BUTTONS GUIDE
14	SCH0010060	KEYPAD LIGHTING BOARD
15	SCH0009983-01	3,5" DISPLAY BOARD
16	VIT0002469	SCREW HEAD TAP M3.5X10
17	SCH0008120	LIGHTING BOARD
18	Z0020043046NA	LOGO LIGHTING BOARD SUPPORT
19	SCH0009580	LOGO LIGHTING BOARD
20	Z0020037653NA	DOOR FRAME RAL9005
21/a	1030000219	RIGHT LATERAL PANEL (WHITE)
21/b	1030000229	RIGHT LATERAL GRAPHIC PANEL (B
22/a	1030000220	LEFT LATERAL PANEL (WHITE)
22/b	1030000230	LEFT LATERAL GRAPHIC PANEL (BL
23	Z0020039537NA	COIN ENTRY BLANK.PLATE
24	Z0020039073NA	CUP SUPPORT PIN BLACK
25	Z0020039072NA-02	CUP SUPPORT BLACK
26	Z0020039087-03IC	CUP HOLDER BRACKET
27	Z0020037661NA	PAY SYSTEM PLUG
28	Z0020037674IC	DOOR INTERNAL COVER (RAL2011)

www.rheavendors.com tel: 0039 02 966 551 fax: 0039 02 96 55 086 email: rheavendors@rheavendors.com exclusive property of rheavendors group

mixer plan (instant version)

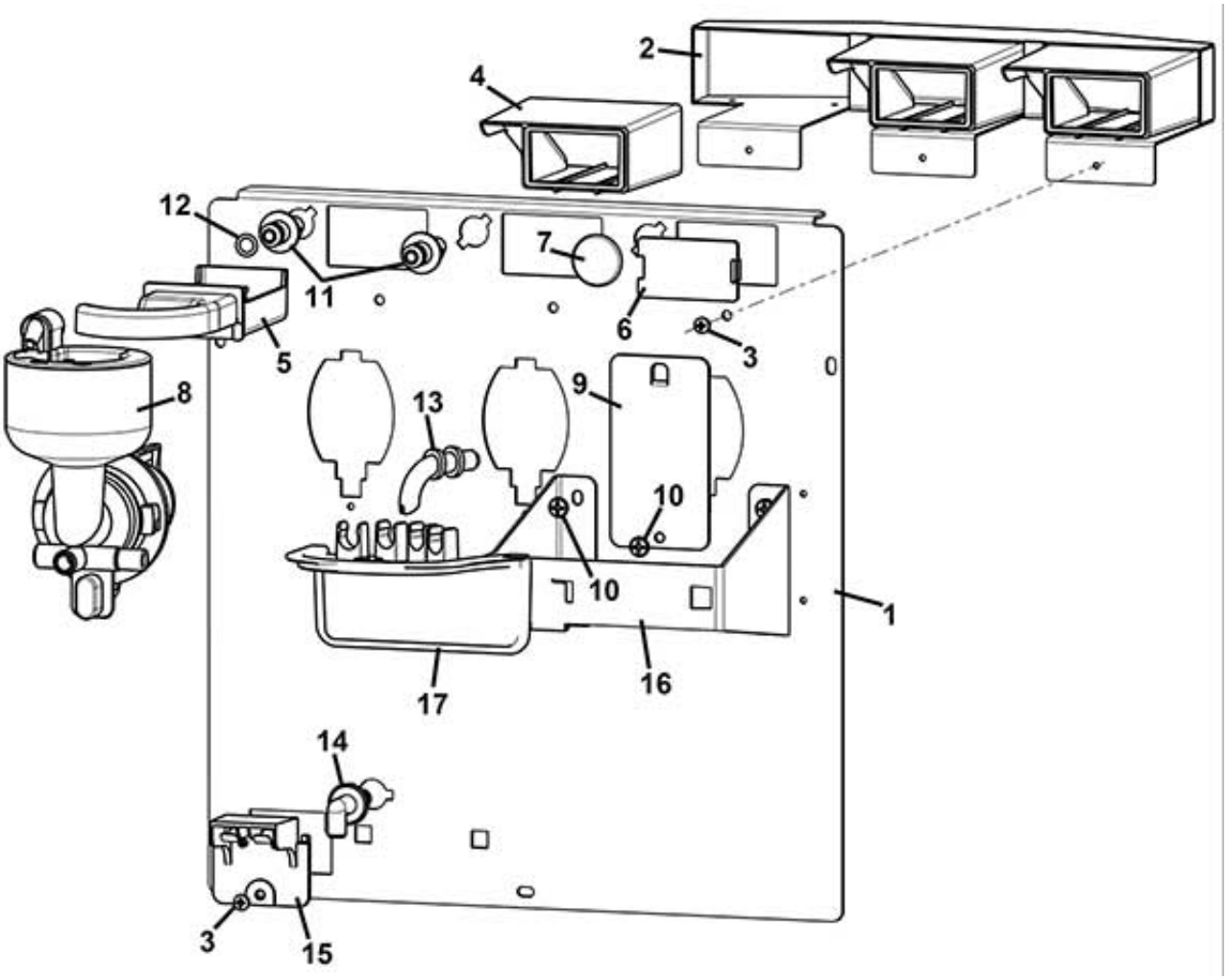

www.rheavendors.com tel: 0039 02 966 551 fax: 0039 02 96 55 086 email: rheavendors@rheavendors.com exclusive property of rheavendors group

mixer plan (instant version)		
Pos.	**Code**	**Description**
1	Z008A145001NA	MIXER PLANE 30 INSTANT
2/a	Z0010028258	SUNCTION INSTANT SUPPORT Up to serial 20244899999
2/b	Z0012300294NA	SUNCTION INSTANT SUPPORT from serial 20244900000
3	VIT0002009	SCREW ST HEAD CAP M3.5X6.5
4	Z0010027214	TRAP DRAWER
5	Z0010027022	TRAP DRAWER REMOVABLE
6	Z0010027039NA	TRAP PLUG
7	Z0080100035NA	CONNECTOR PLUG BLACK
8		See table mixer
9	Z0010020028NA	MIXER PLUG BLACK
10	VIT0002401	SCREW ST HEAD CAP M3.5X9.5
11	Z0080100043	MIXER CONNECTOR BLACK
12	GUA0000085	OR 106 RED SILICONE A70
13	Z0010020052	PRODUCT NOZZLE
14	Z0080100084	90° CONNECTOR
15	Z0010020836CL	§DRIP TRAY SENSOR
16	Z0380020003NA-02	NOZZLES HOLDER
17	Z0380020001NA	NOZZLES HOLDER

www.rheavendors.com tel: 0039 02 966 551 fax: 0039 02 96 55 086 email: rheavendors@rheavendors.com exclusive property of rheavendors group

mixer

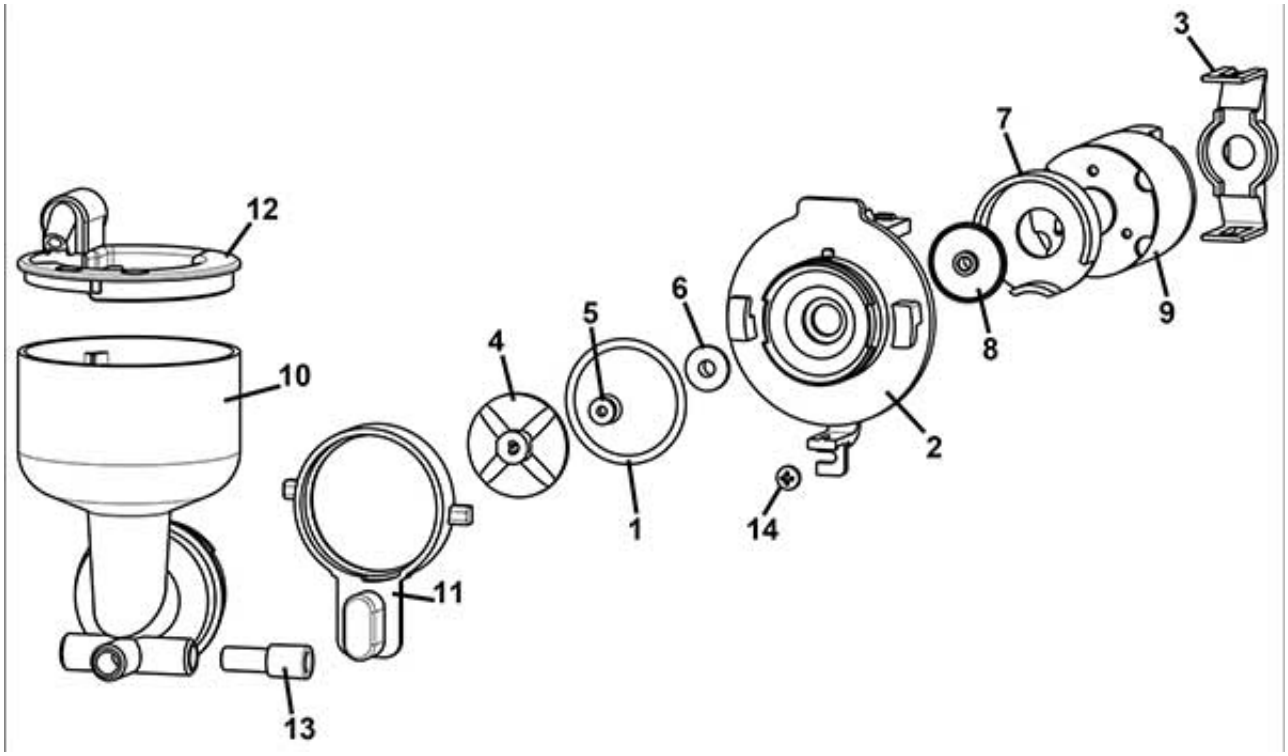

www.rheavendors.com tel: 0039 02 966 551 fax: 0039 02 96 55 086 email: rheavendors@rheavendors.com exclusive property of rheavendors group

mixer		
Pos.	**Code**	**Description**
1	GUA0000084	OR 3131 RED SILICONE A60
2	Z0080100005	MOTOR MIXER BASE
3	Z0080100009IC	MIXER MOTOR SUPPORT RAL2011
4	Z0080100011	MIXER FAN
5	Z0080100102	MIXER SHAFT GASKET
6	Z0080100015	MIXER BUSH
7	Z0080100023IC	MIXER COVER RAL2011
8	Z0080100024	MIXER FAN
9	Z0090003023	MIXER MOTOR 24V DC SHAFT D.4
10/a	Z0080200110L	MIXING BOWL L.W/H20 BREAKER
10/b	Z0080200111R	MIXING BOWL R.W/H20 BREAKER
10/c	Z0080200112C	MIXING BOWL F.W/H20 BREAKER
11	Z0080100006IC	LOCK RING RAL2011
12	Z0080100042	MIXER RING W/PIPE X4,25 BLACK
13	Z0080100095	TUBE REDUCER D.4
14	VIT0002401	SCREW ST HEAD CAP M3.5X9.5
100	Z0080100001R	§ MIXER BOWL BASE+MOTOR (from pos.1 to pos.9)

www.rheavendors.com tel: 0039 02 966 551 fax: 0039 02 96 55 086 email: rheavendors@rheavendors.com exclusive property of rheavendors group

boiler

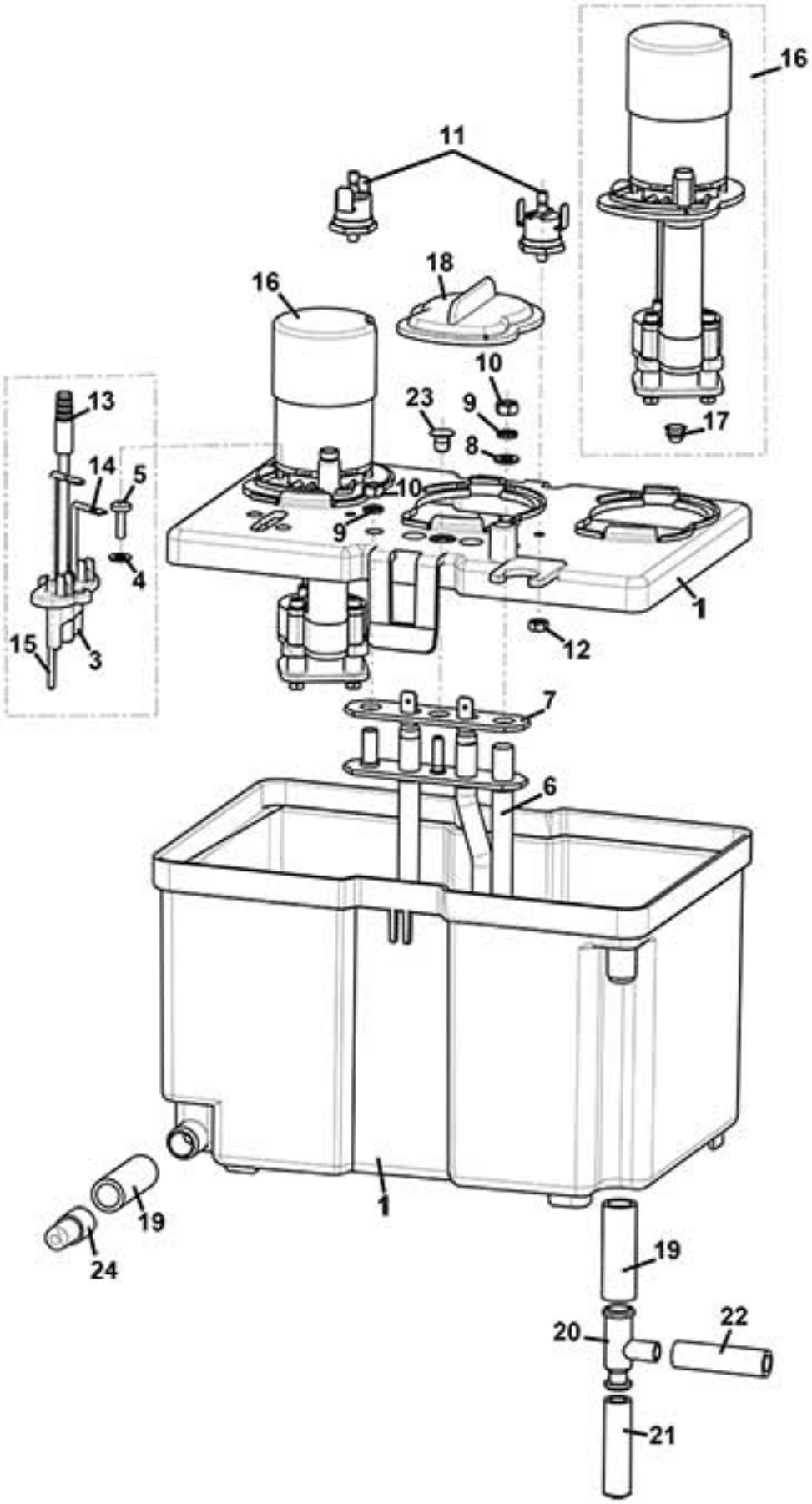

www.rheavendors.com tel: 0039 02 966 551 fax: 0039 02 96 55 086 email: rheavendors@rheavendors.com exclusive property of rheavendors group

boiler		
Pos.	**Code**	**Description**
1	Z0600016401R	§ TANK+BOILER COVER
3	Z0600016089	PROBE SUPPORT
4	VIT0003211	WASHER 4,3X9X0,8
5	VIT0001005	SCREW HEAD TAP CAP M4X12
6/a	Z0600016137R	§ HEATING ELEMENT 1300W 230V For 230V version
6/b	Z0600016146	HEATING ELEMENT 1100W 100V For 100V version
7	Z0600016084	HEATING ELEMENT GASKET
8	VIT0003203	WASHER 5,3X10X1
9	VIT0003111	SPRING WASHER 5,3
10	VIT0004804	NUT M5
11	ELE0000965	CLIXSON 88°
12	VIT0004816	NUT M4
13	ELE0000963R	§ TEMPERATURE PROBE+SENSOR
14	Z0600016054	MAXIMUM LEVEL PROBE
15	Z0600016053	MINIMUM LEVEL PROBE
16	Z0600016405R	§ BOILER PUMP
17	Z0080100102	MIXER SHAFT GASKET
18	Z0600016422	PUMP LID
19/a	TSIL10/14T-10	SILICON HOSE 10X14 MT.10
19/b	TSIL10/14T-50	SILICON HOSE 10X14 MT.50
20	Z0600016028	T CONNECTOR
21/a	TSIL06/11T-10	SILICON HOSE 6X11 MT.10
21/b	TSIL06/11T-50	SILICON HOSE 6X11 MT.50
22/a	TSIL06/09T-10	SILICON HOSE 6X9 MT.10
22/b	TSIL06/09T-50	SILICON HOSE 6X9 MT.50
23	Z0230030154	PLUG
24	650001057	DRAINER PLUG
100	Z0600016400CL2	§ BOILER 2PUMP 1300W 230V
101	Z0600016400CL3	3 PUMPS BOILER-230V W/THERMOF.
102	Z0600016420CL2	§ BOILER 3PUMP 230V

www.rheavendors.com tel: 0039 02 966 551 fax: 0039 02 96 55 086 email: rheavendors@rheavendors.com exclusive property of rheavendors group

product containers

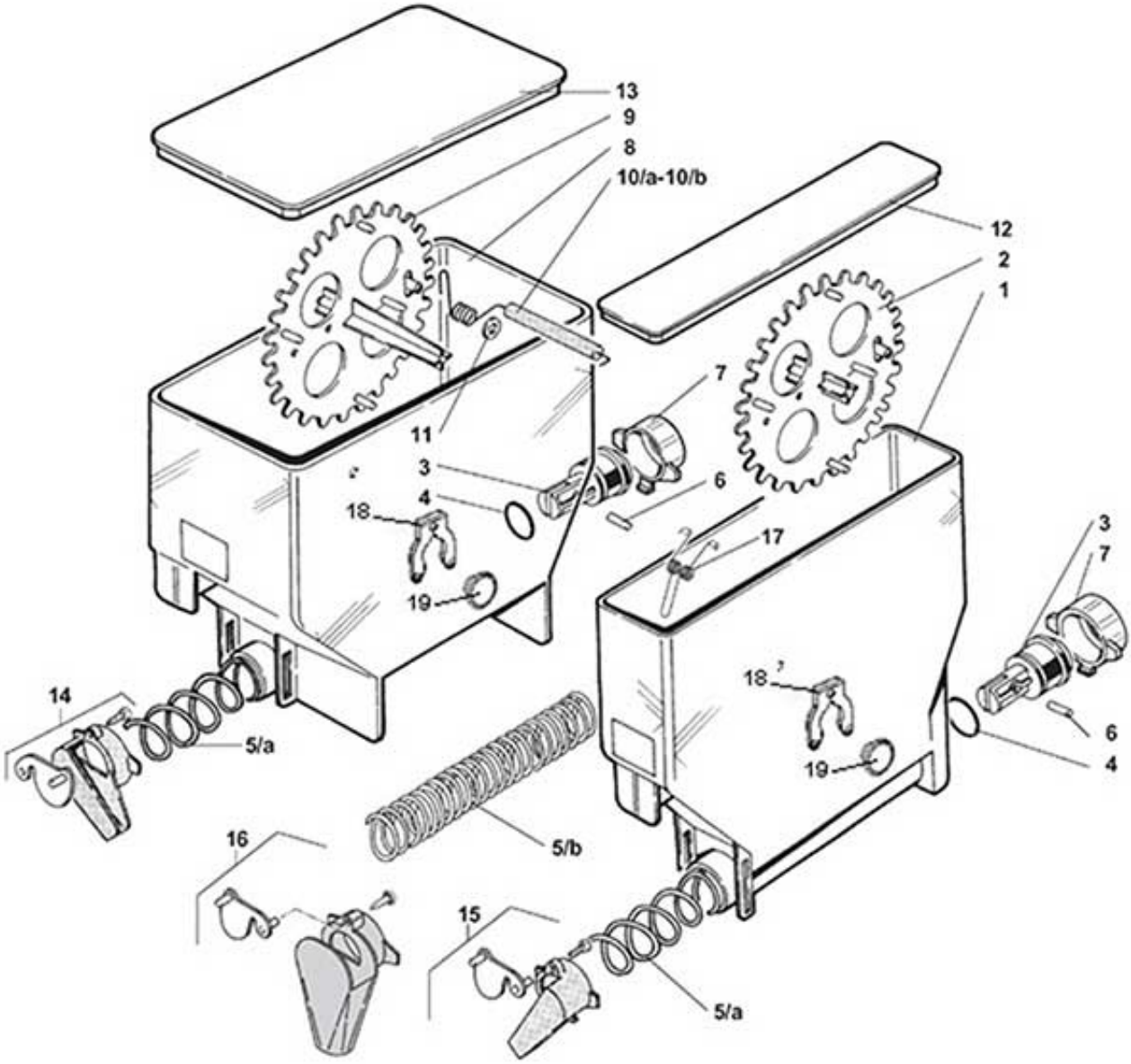

www.rheavendors.com tel: 0039 02 966 551 fax: 0039 02 96 55 086 email: rheavendors@rheavendors.com exclusive property of rheavendors group

product containers		
Pos.	**Code**	**Description**
1	Z0230030500	INGREDIENT CANISTER 54 190
2	Z0230030236AB	§ WHEEL MM54
3	Z0230030012	SPIRAL PIN
4	GUA0000083	OR 123 RED SILICONE A70
5/a	Z0230030014	SPIRAL 18
5/b	Z0230030013	SPIRAL 9
6	VIT0005106	PIN 2X14
7	Z0230030011	REAR BUSH
8	Z0230030520	INGREDIENT CANISTER 110-190
9	Z0230030237AB	§ WHEEL MM110
10/a	Z0230030064	AGITATOR 112 - RIGHT OUTLET
10/b	Z0230030062	AGITATOR 112 - LEFT OUTLET
11	VIT0003210	WASHER 8,4X16X1,6
12	Z0230030156	CANISTER 54 LID
13	Z0230030158	CANISTER 110 LID
14/a	Z0230030058R	§ INGRED. CHUTE-RIGHT ORANGE
14/b	Z0230030044R	§ INGREDIENT CHUTE-RIGHT RED
15/a	Z0230030057R	§ INGREDIENT CHUTE-LEFT ORANGE
15/b	Z0230030043R	§ INGREDIENT CHUTE-LEFT RED
16	Z0230030059R	§ INGRED. CHUTE-FRONTALORANGE
17	Z0230030060-05	PRODUCT AGITATOR
18	Z0230030239	WHEEL PIN FORK
19	Z0230030238-02	WHEEL PIN
100	Z0230030522R	§ CAN. 110-190 AGIT.18 W/LID-R
101	Z0230030525R	§ CAN. 110-190 AGIT.18 W/LID-L
102	Z0230030506R	§ CANIS. 54-190 WHEEL18 W/LID
103	Z0230030502R	§ CANIS. 54-190 WHEEL9 W/LID

www.rheavendors.com tel: 0039 02 966 551 fax: 0039 02 96 55 086 email: rheavendors@rheavendors.com exclusive property of rheavendors group

OPTIONAL KIT

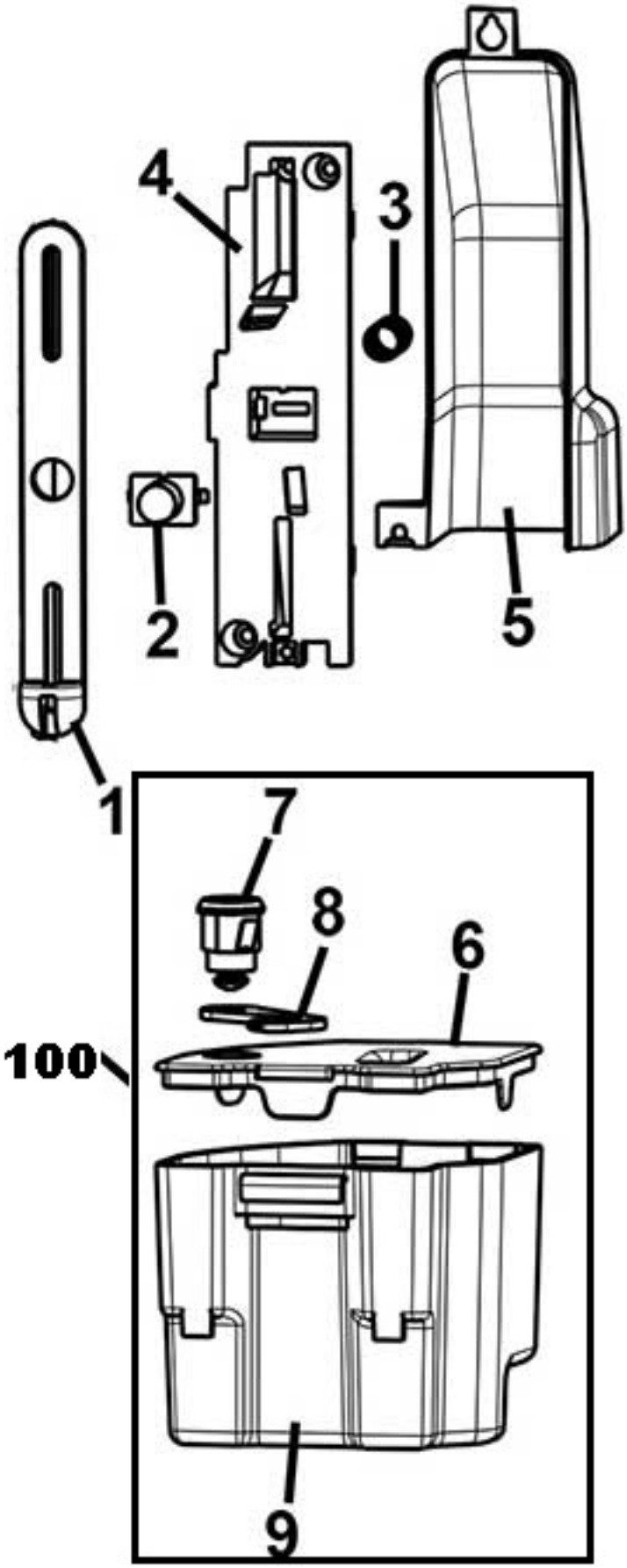

www.rheavendors.com tel: 0039 02 966 551 fax: 0039 02 96 55 086 email: rheavendors@rheavendors.com exclusive property of rheavendors group

OPTIONAL KIT		
Pos.	**Code**	**Description**
1	Z0020035031NA	COIN ENTRY PLATE BLACK
2	Z0020035033NA	COIN RETURN BUTTON BLACK
3	Z0020035034	COIN RETURN BUTTON SPRING
4	Z0020035032NA	PAYM SYSTEM SUPPORT
5	Z0020037656NA	PAY. SYSTEM COVER
6	Z0030010212NA	COINS BOX COVER
7	SER0000015	LOCK MM20 C.3430
8	Z0020037128	COIN BOX HOOK
9	Z0030010211NA	COINS BOX
100	Z0030010210R	§ COIN BOX Include Pos. 6 + 7 + 8 + 9
200	D1019600A1000	KIT W/FIT W/O MECH RAL9005 To be ordered to RV INDUSTRIES
201	D1019600A0000	KIT W/FIT W/O MECH RAL9006 To be ordered to RV INDUSTRIES

www.rheavendors.com tel: 0039 02 966 551 fax: 0039 02 96 55 086 email: rheavendors@rheavendors.com exclusive property of rheavendors group

WIRINGS

www.rheavendors.com tel: 0039 02 966 551 fax: 0039 02 96 55 086 email: rheavendors@rheavendors.com exclusive property of rheavendors group

WIRINGS		
Pos.	**Code**	**Description**
1	CBLXSC0002	POWER WIRING 230V
2	CBLXSC0012	24V CONTROLS WIRING
3	CBLA122002	SUPPLY DOOR 5/24V WIRING
4	CBLXSC0001	DOOR SWITCH WIRING
5	CBLXSC0042	LED SUPPLY WIRING
6	CBLXM00109	LIGHTING LABELS SHORT WIRING
7	CBLXM00110	MED LABELS ENLIGHTING WIRING
8	CBLXM00111	LABELS ENLIGHTENMENT WIRING
9	CBLXS00228	LED BOARD WIRING
10	CBLXM00108	LOGO ENLIGHTENMENT WIRING

www.rheavendors.com tel: 0039 02 966 551 fax: 0039 02 96 55 086 email: rheavendors@rheavendors.com exclusive property of rheavendors group