vending machine

file immagini/ricambi/copertine/rhea business line ec e.jpg NOT exists!!!!!!

spare parts manual

www.rheavendors.com tel: 0039 02 966 551 fax: 0039 02 96 55 086 email: rheavendors@rheavendors.com exclusive property of rheavendors group

cabinet (Unplumbed version)

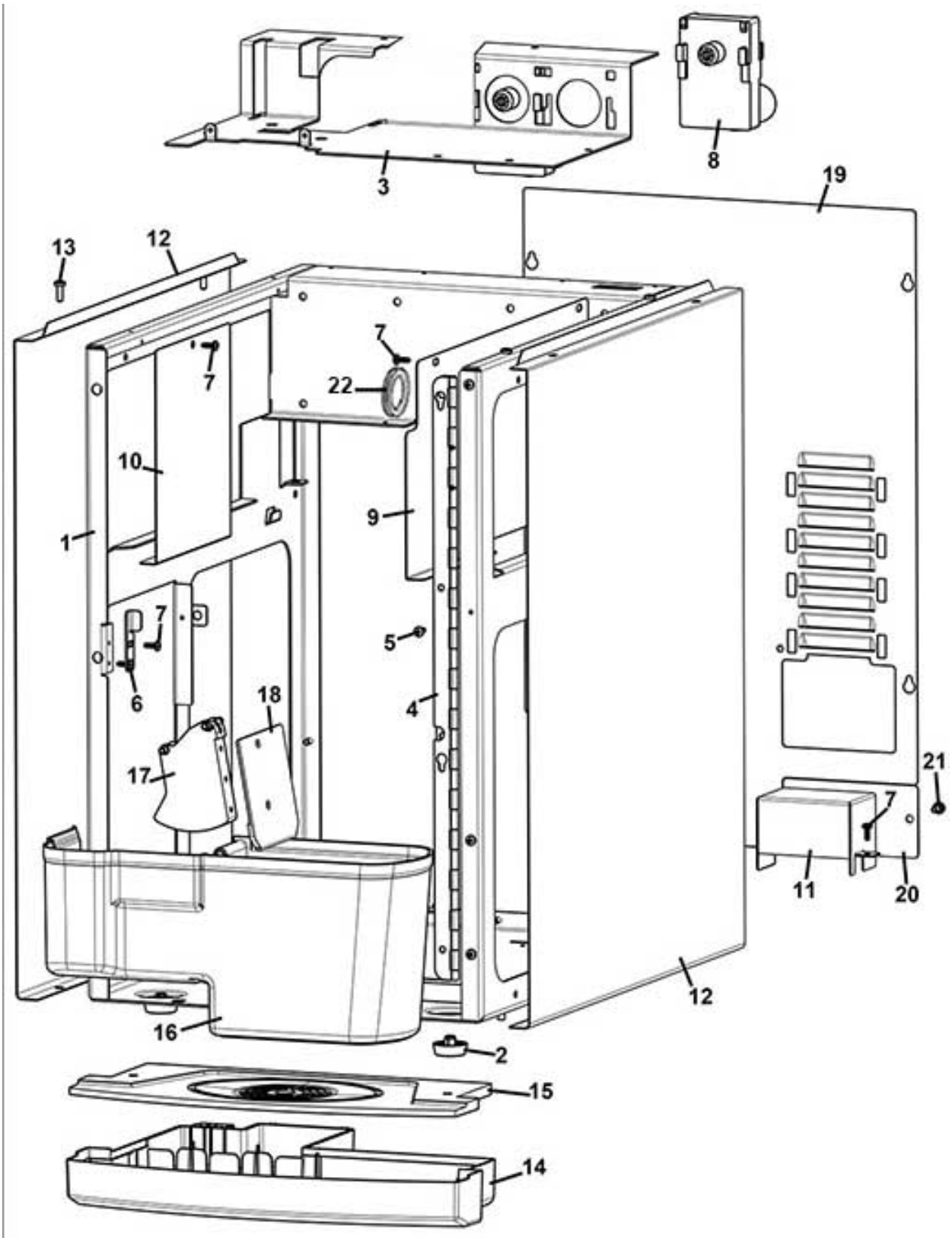

www.rheavendors.com tel: 0039 02 966 551 fax: 0039 02 96 55 086 email: rheavendors@rheavendors.com exclusive property of rheavendors group

cabinet (Unplumbed version)		
Pos.	**Code**	**Description**
1	Z0010028249NA-05	CABINET (BLACK)
2	GUA0011011	MACHINE FOOT D.25
3	Z0010028256NA	GEARBOX MOTOR PLATE VRFLX
4	Z0010028153-03	DOOR HINGE
5	VIT0002010	SCREW ST HEAD CAP M3.5X9.5
6	Z0010028284	DOOR CLOSING
7	VIT0002401	SCREW ST HEAD CAP M3.5X9.5
8	Z0090002113	MOTOR 24 DC 97 RPM
9	Z0010028177NA	RIGHT COVER
10	Z0010028244NA	LEFT COVER
11	Z0010028237	OUTLET COVER eC
12	Z0010028243NA	RIGHT-LEFT SIDE (BLACK)
13	VIT0000012	SCREW HEAD TAP CAP M4X10
14	Z0010028282CL	H2O DRIP TRAY
15	Z0010028281NA	H2O DRIP TRAY GRID RAL 9005
16	Z0010028288	GROUNDS CONTAINER
17	Z0010024164-02	GROUNDS EJECTOR
18	Z0010028250	GROUNDS EJECTOR PLATE
19	Z0010028172-03NA	REAR COVER RAL 9005
20	Z0010028239-01NA	BOILER OUTLET REAR DOOR BLACK
21	4060010126	PAYM SYSTEM FIXING SCREW
22	GUA0010503	ELECTRICAL GROMMET DG 29

www.rheavendors.com tel: 0039 02 966 551 fax: 0039 02 96 55 086 email: rheavendors@rheavendors.com exclusive property of rheavendors group

cabinet (Plumbed version)

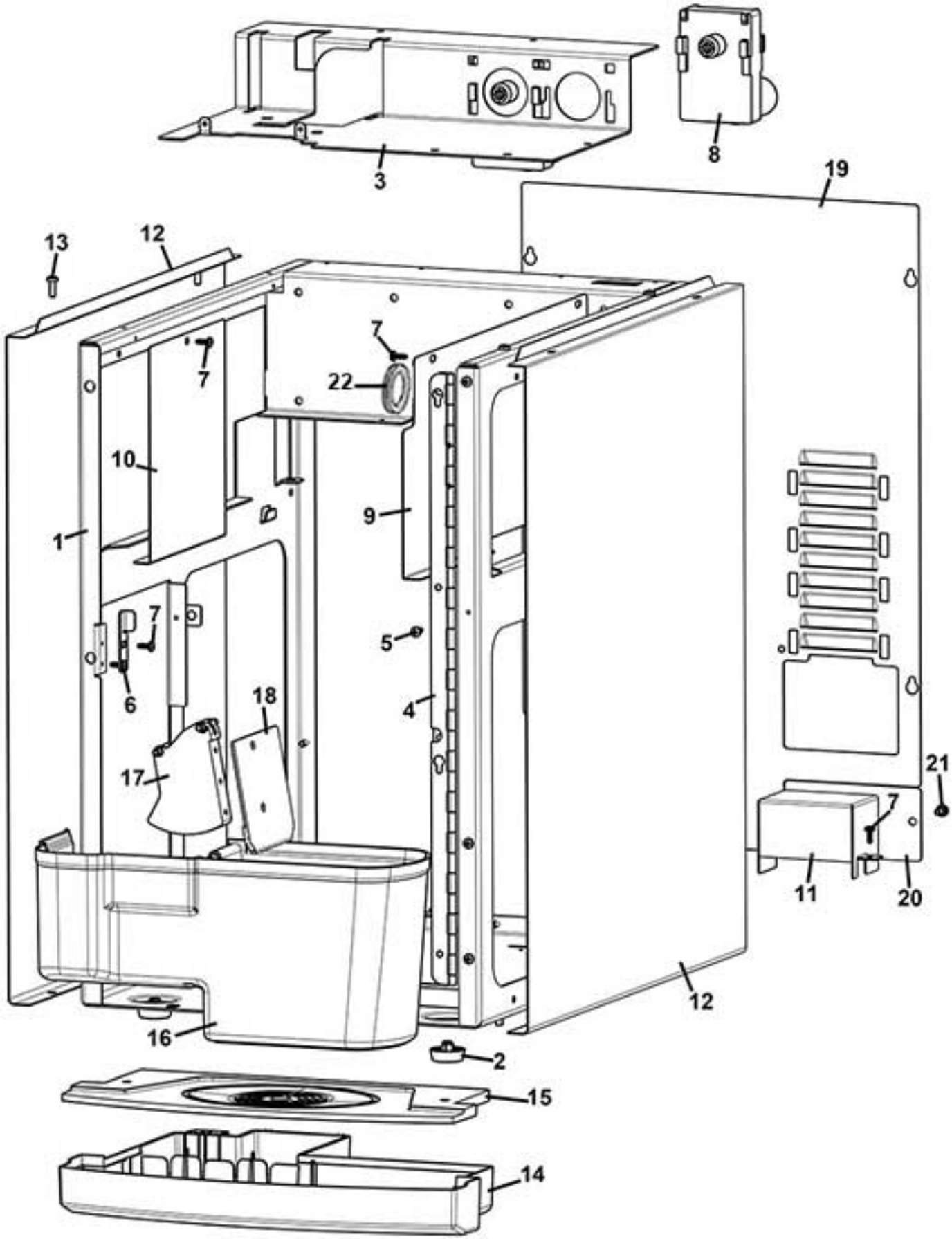

www.rheavendors.com tel: 0039 02 966 551 fax: 0039 02 96 55 086 email: rheavendors@rheavendors.com exclusive property of rheavendors group

cabinet (Plumbed version)		
Pos.	**Code**	**Description**
1	Z0010028249NA-05	CABINET (BLACK)
2	GUA0011011	MACHINE FOOT D.25
3	Z0010028255NA	PROFESSIONAL GROUP MOTOR PLATE
4	Z0010028153-03	DOOR HINGE
5	VIT0002010	SCREW ST HEAD CAP M3.5X9.5
6	Z0010028284	DOOR CLOSING
7	VIT0002401	SCREW ST HEAD CAP M3.5X9.5
8	Z0090002113	MOTOR 24 DC 97 RPM
9	Z0010028177NA	RIGHT COVER
10	Z0010028244NA	LEFT COVER
11	Z0010028237	OUTLET COVER eC
12	Z0010028243NA	RIGHT-LEFT SIDE (BLACK)
13	VIT0000012	SCREW HEAD TAP CAP M4X10
14	Z0010028282CL	H2O DRIP TRAY
15	Z0010028281NA	H2O DRIP TRAY GRID RAL 9005
16	Z0010028288	GROUNDS CONTAINER
17	Z0010024164-02	GROUNDS EJECTOR
18	Z0010028250	GROUNDS EJECTOR PLATE
19	Z0010028172-03NA	REAR COVER RAL 9005
20	Z0010028239-01NA	BOILER OUTLET REAR DOOR BLACK
21	4060010126	PAYM SYSTEM FIXING SCREW
22	GUA0010503	ELECTRICAL GROMMET DG 29

www.rheavendors.com tel: 0039 02 966 551 fax: 0039 02 96 55 086 email: rheavendors@rheavendors.com exclusive property of rheavendors group

UPPER COVER

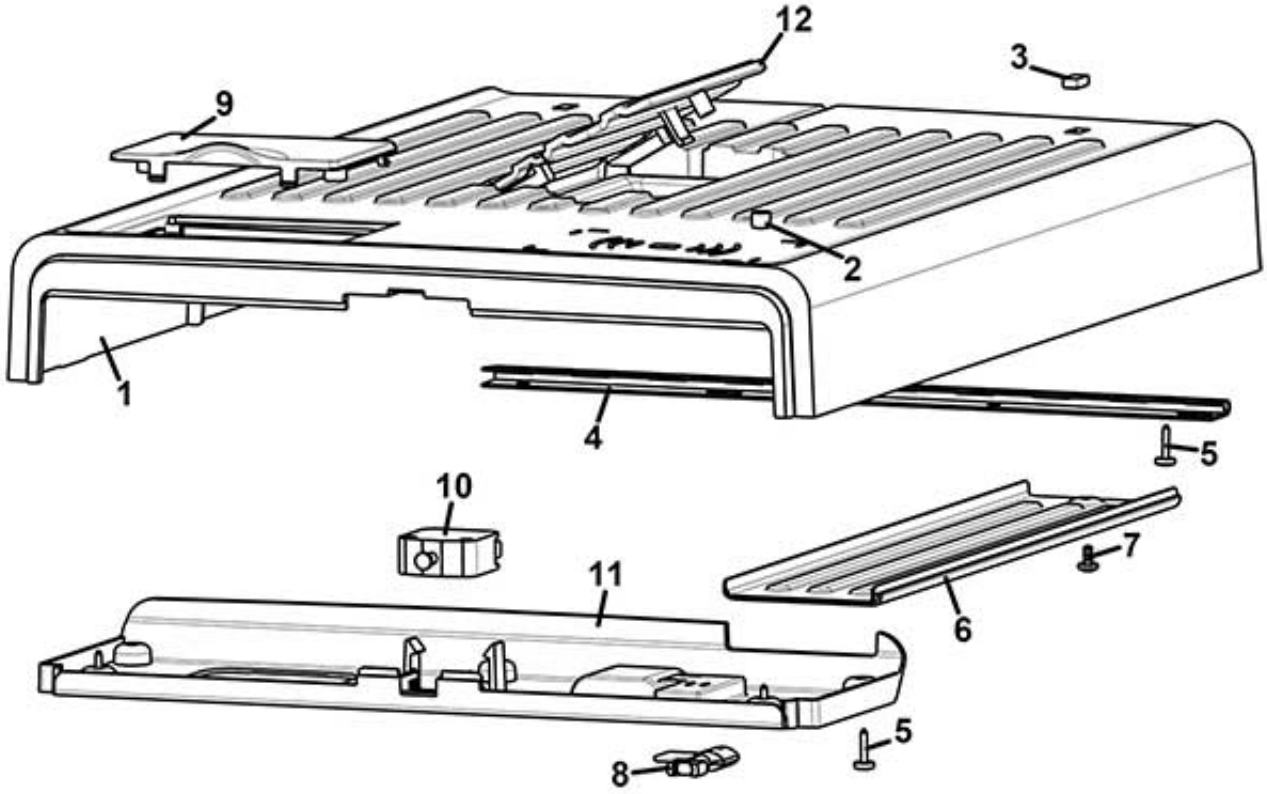

www.rheavendors.com tel: 0039 02 966 551 fax: 0039 02 96 55 086 email: rheavendors@rheavendors.com exclusive property of rheavendors group

UPPER COVER		
Pos.	**Code**	**Description**
1	Z0010028276NA	UPPER COVER RAL 9005
2	Z0010027344	RING PLUG
3	Z0010027343	PLUG SUPPORT COVER
4	Z0010028158	UPPER HINGE LID
5	VIT0002469	SCREW HEAD TAP M3.5X10
6	Z0010028280NA	CABLE COVER 9005
7	VIT0002009	SCREW ST HEAD CAP M3.5X6.5
8	Z0270011109IC	SERVICE KEY RAL2011
9	Z0010028279NA	DEKA LID RAL 9005
10	ELE0002019	SWITCH 16A 250V
11	Z0010028277NA	UPPER COVER CLOSING RAL 9005
12	Z0010028283NA	COVER (RAL 9005)

www.rheavendors.com tel: 0039 02 966 551 fax: 0039 02 96 55 086 email: rheavendors@rheavendors.com exclusive property of rheavendors group

rear cabinet (Unplumbed version)

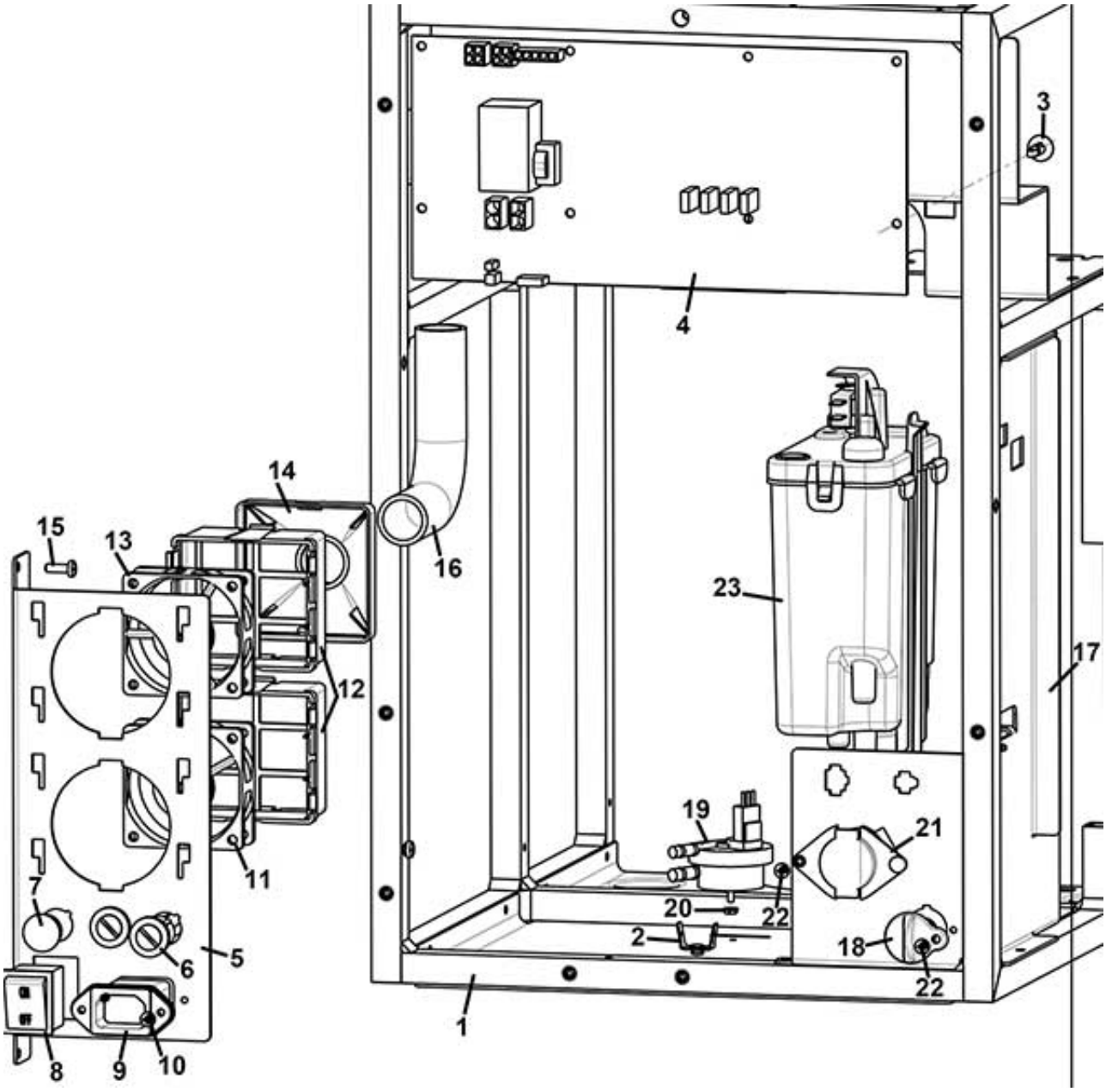

www.rheavendors.com tel: 0039 02 966 551 fax: 0039 02 96 55 086 email: rheavendors@rheavendors.com exclusive property of rheavendors group

rear cabinet (Unplumbed version)		
Pos.	**Code**	**Description**
1	Z0010028249NA-05	CABINET (BLACK)
2	ELE0060520	GROUND PIN
3	ELE0062020	BOARD SUPPORT
4	SCH0008964-01	CPU/POWER BOARD
5	Z0130013061-03	ELECTRIC COMPONENT SUPP.
6	ELE0003508CL	FUSE HOLDER+FUSE 12A
7	GUA0011010	PLUG
8	ELE0002014CL3	BIPOLAR SWITCH 15A 250V
9	ELE0002315	MAINS SOCKET 115/250V 10A
10	VIT0002010	SCREW ST HEAD CAP M3.5X9.5
11	ELE0000462	FAN 24V DC-LOW SPEED
12	Z0010027064	FAN SUPPORT
13	ELE0000461	FAN 24V DC-HIGH SPEED
14	Z0010027065	FAN CONNECTOR
15	VIT0002401	SCREW ST HEAD CAP M3.5X9.5
16	TEOL000001CL1	EXTRACTOR TUBE D.20 170MM
17	Z0010028248-06	HYDRAULIC HOLDER
18	Z0600016455	H2O OUTLET PLUG
19	Z0110007003	VOLUMETRIC COUNTER
20	VIT0004701	NUT M3
21	Z0010020839	INLET H2O VALVE PLUG
22	VIT0002009	SCREW ST HEAD CAP M3.5X6.5
23		See table water inlet panel

www.rheavendors.com tel: 0039 02 966 551 fax: 0039 02 96 55 086 email: rheavendors@rheavendors.com exclusive property of rheavendors group

rear cabinet (Plumbed version)

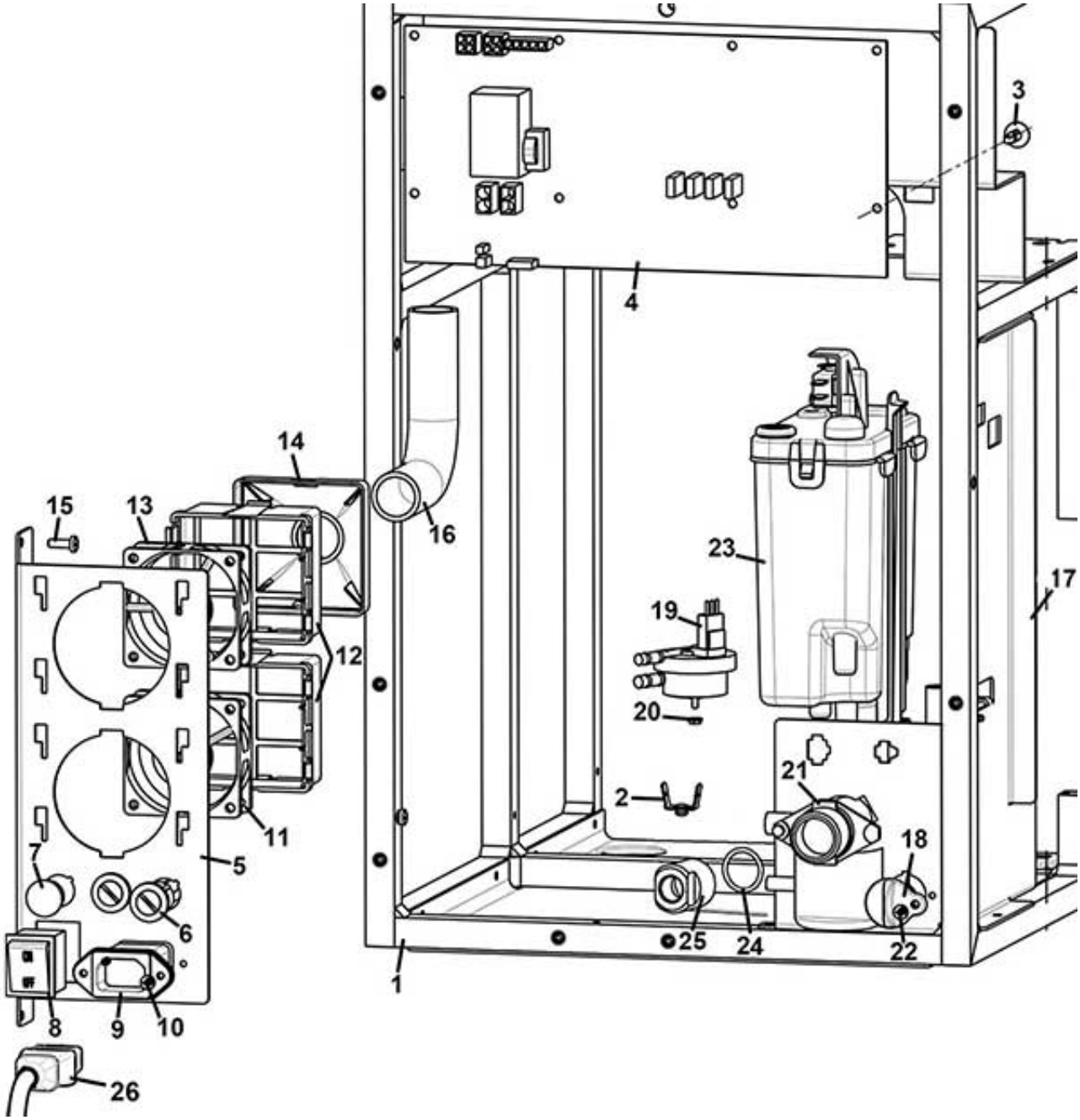

www.rheavendors.com tel: 0039 02 966 551 fax: 0039 02 96 55 086 email: rheavendors@rheavendors.com exclusive property of rheavendors group

rear cabinet (Plumbed version)		
Pos.	**Code**	**Description**
1	Z0010028249NA-05	CABINET (BLACK)
2	ELE0060520	GROUND PIN
3	ELE0062020	BOARD SUPPORT
4/a	SCH0008964-01	CPU/POWER BOARD
4/b	SCH0008964CL	§CPU/PWR BOARD 100/120V For 100/120V version
5/a	Z0130013061-03	ELECTRIC COMPONENT SUPP.
5/b	Z0130013062	ELECTRIC COMPONENT SUPP. For 100V version
6/a	ELE0003508CL	FUSE HOLDER+FUSE 12A
6/b	ELE0003509CL	FUSE HOLDER For 100V version
7	GUA0011010	PLUG
8/a	ELE0002014CL3	BIPOLAR SWITCH 15A 250V
8/b	ELE0002020	BIPOLAR SWITCH 20A 250V For 100V version
9/a	ELE0002315	MAINS SOCKET 115/250V 10A
9/b	ELE0002318	MAINS SOCKET 115/250V 20/16A For 100V version
10	VIT0002010	SCREW ST HEAD CAP M3.5X9.5
11	ELE0000462	FAN 24V DC-LOW SPEED
12	Z0010027064	FAN SUPPORT
13	ELE0000461	FAN 24V DC-HIGH SPEED
14	Z0010027065	FAN CONNECTOR
15	VIT0002401	SCREW ST HEAD CAP M3.5X9.5
16	TEOL000001CL1	EXTRACTOR TUBE D.20 170MM
17	Z0010028248-06	HYDRAULIC HOLDER
18	Z0600016455	H2O OUTLET PLUG
19	Z0110007003	VOLUMETRIC COUNTER
20	VIT0004701	NUT M3
21	Z0110001058	WATER INLET VALVE 24V DC
22	VIT0002009	SCREW ST HEAD CAP M3.5X6.5
23		See table water inlet panel
24	GUA0000021	OR 130 NBR AL 75 BLACK
25	Z0100006001-01	F/F CYLINDRIC 3/4-3/8 REDUCT.
26/a	ELE0055008	SUPPLY CABLE+PLUG+SCHUK.SOCKET
26/b	ELE0055009	SUPPLY CABLE+PLUG+CH SOCKET
26/c	ELE0055010	SUPPLY CABLE+PLUG+GBSOCKET
26/d	ELE0055018	SUPPLY CABLE+PLUG+ZA SOCKET
26/e	ELE0055026	POWER LEAD-IEC16A PLUG-JAPAN
26/f	ELE0055032	SUPPLY CABLE+PLUG+AUSTRAL SOCK

www.rheavendors.com tel: 0039 02 966 551 fax: 0039 02 96 55 086 email: rheavendors@rheavendors.com exclusive property of rheavendors group

DOOR

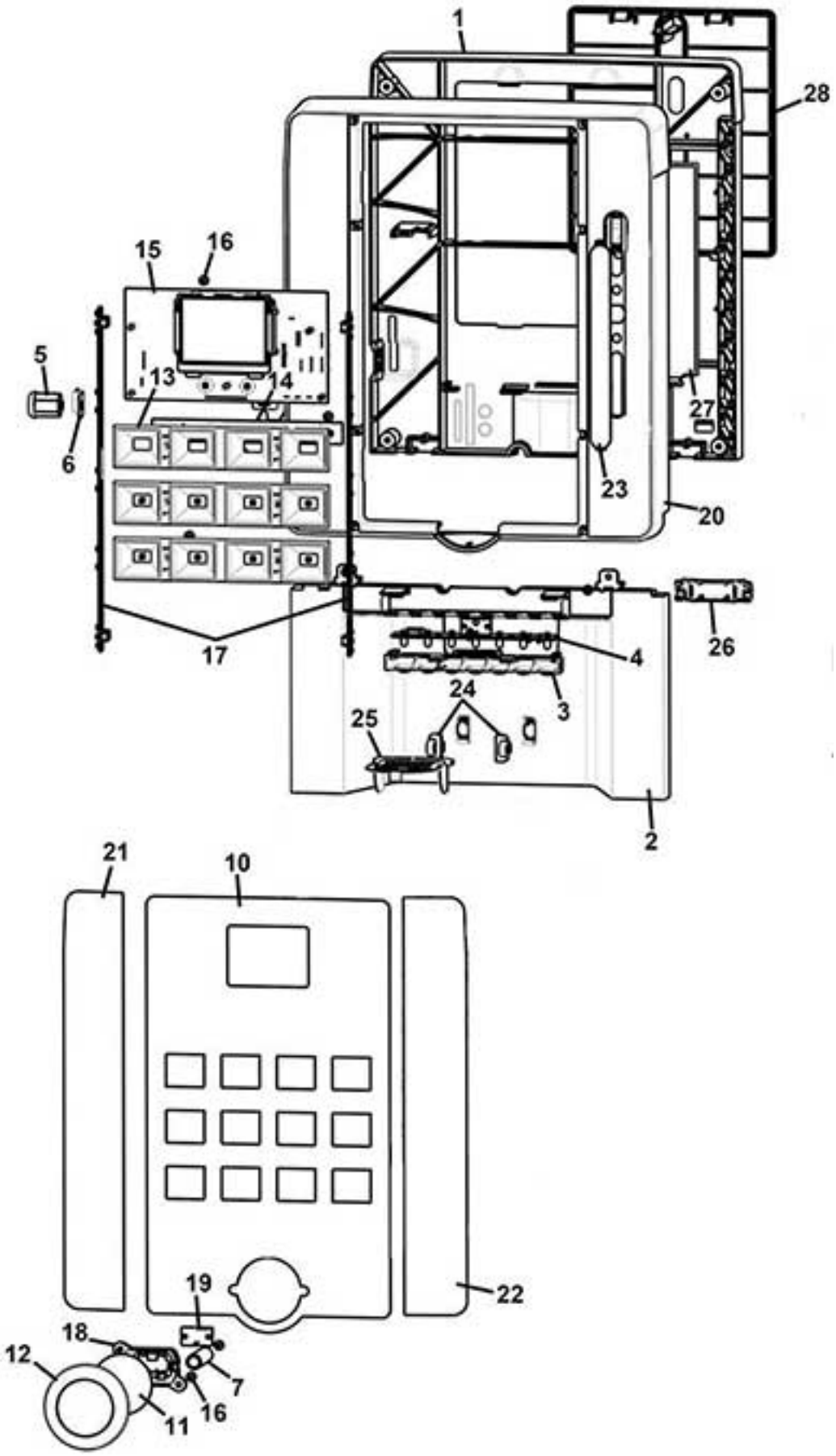

www.rheavendors.com tel: 0039 02 966 551 fax: 0039 02 96 55 086 email: rheavendors@rheavendors.com exclusive property of rheavendors group

DOOR		
Pos.	**Code**	**Description**
1	Z0020037671NA	DOOR STRUCTURE BLACK
2	Z0020037652NA	CUPS STATION FRAME RAL9005
3	Z0020039078TR	CUP STAT.ENLIGHTENMENT SUPPORT
4	SCH0008142	LIGHTING CUP STATION BOARD
5	SER0000028/1	LOCK INOX RVI MM20 C.3480
6	Z0010028157	LOCK PLATE
7	Z0020037673	SPACER D.12X9X52,5
10	1030000104R	§PLEX+CAP.KEYPD+BLACK PANEL
11	1030000297	BL LOGO
12	Z0020039084CL	§ DOOR LOGO FRAME CROMO
13	Z0020037675AB	LIGHT BUTTONS GUIDE
14	SCH0010060	KEYPAD LIGHTING BOARD
15	SCH0009983-01	3,5" DISPLAY BOARD
16	VIT0002469	SCREW HEAD TAP M3.5X10
17	SCH0008120	LIGHTING BOARD
18	Z0020043046NA	LOGO LIGHTING BOARD SUPPORT
19	SCH0009580	LOGO LIGHTING BOARD
20	Z0020037653NA	DOOR FRAME RAL9005
21/a	1030000219	RIGHT LATERAL PANEL (WHITE)
21/b	1030000229	RIGHT LATERAL GRAPHIC PANEL (B
22/a	1030000220	LEFT LATERAL PANEL (WHITE)
22/b	1030000230	LEFT LATERAL GRAPHIC PANEL (BL
23	Z0020039537NA	COIN ENTRY BLANK.PLATE
24	Z0020039073NA	CUP SUPPORT PIN BLACK
25	Z0020039072NA-02	CUP SUPPORT BLACK
26	Z0020039087-03IC	CUP HOLDER BRACKET
27	Z0020037661NA	PAY SYSTEM PLUG
28	Z0020037674IC	DOOR INTERNAL COVER (RAL2011)

www.rheavendors.com tel: 0039 02 966 551 fax: 0039 02 96 55 086 email: rheavendors@rheavendors.com exclusive property of rheavendors group

mixer plan (espresso version)

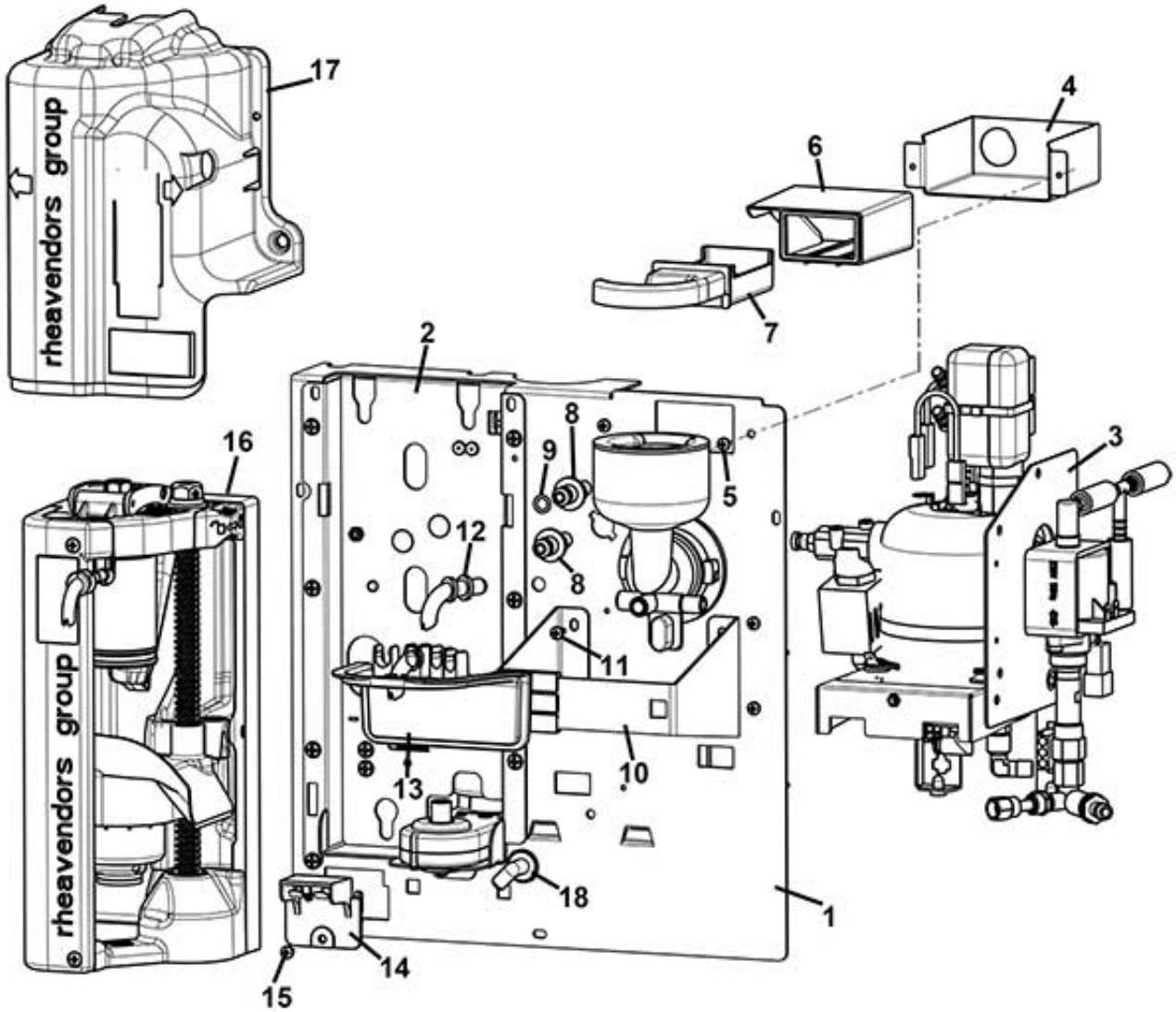

www.rheavendors.com tel: 0039 02 966 551 fax: 0039 02 96 55 086 email: rheavendors@rheavendors.com exclusive property of rheavendors group

mixer plan (espresso version)		
Pos.	**Code**	**Description**
1	Z0260014026-03NA	BREWER SUPPORT PLATE
2		See table PRO BREWER SUPPORT+MOTOR
3		See table ESPRESSO boiler support
4	Z0070030422	SUCTION SUPPORT
5	VIT0002002	SCREW ST HEAD CAP M3.5X6.5
6	Z0010027214	TRAP DRAWER
7	Z0010027022	TRAP DRAWER REMOVABLE
8	Z0080100013	MIXER CONNECTOR
9	GUA0000085	OR 106 RED SILICONE A70
10	Z0380020015NA	HOSES SUPPORT
11	VIT0002010	SCREW ST HEAD CAP M3.5X9.5
12	Z0010020052	PRODUCT NOZZLE
13	Z0380020001NA	NOZZLES HOLDER
14	Z0010020836CL	§DRIP TRAY SENSOR
15	VIT0002401	SCREW ST HEAD CAP M3.5X9.5
16		See table PROFESSIONAL BREWER GROUP D.45
17	Z0250014007CL1	§ VARIFLEX BREWER COVER-TT
18	Z0080100084	90° CONNECTOR

www.rheavendors.com tel: 0039 02 966 551 fax: 0039 02 96 55 086 email: rheavendors@rheavendors.com exclusive property of rheavendors group

ESPRESSO boiler support

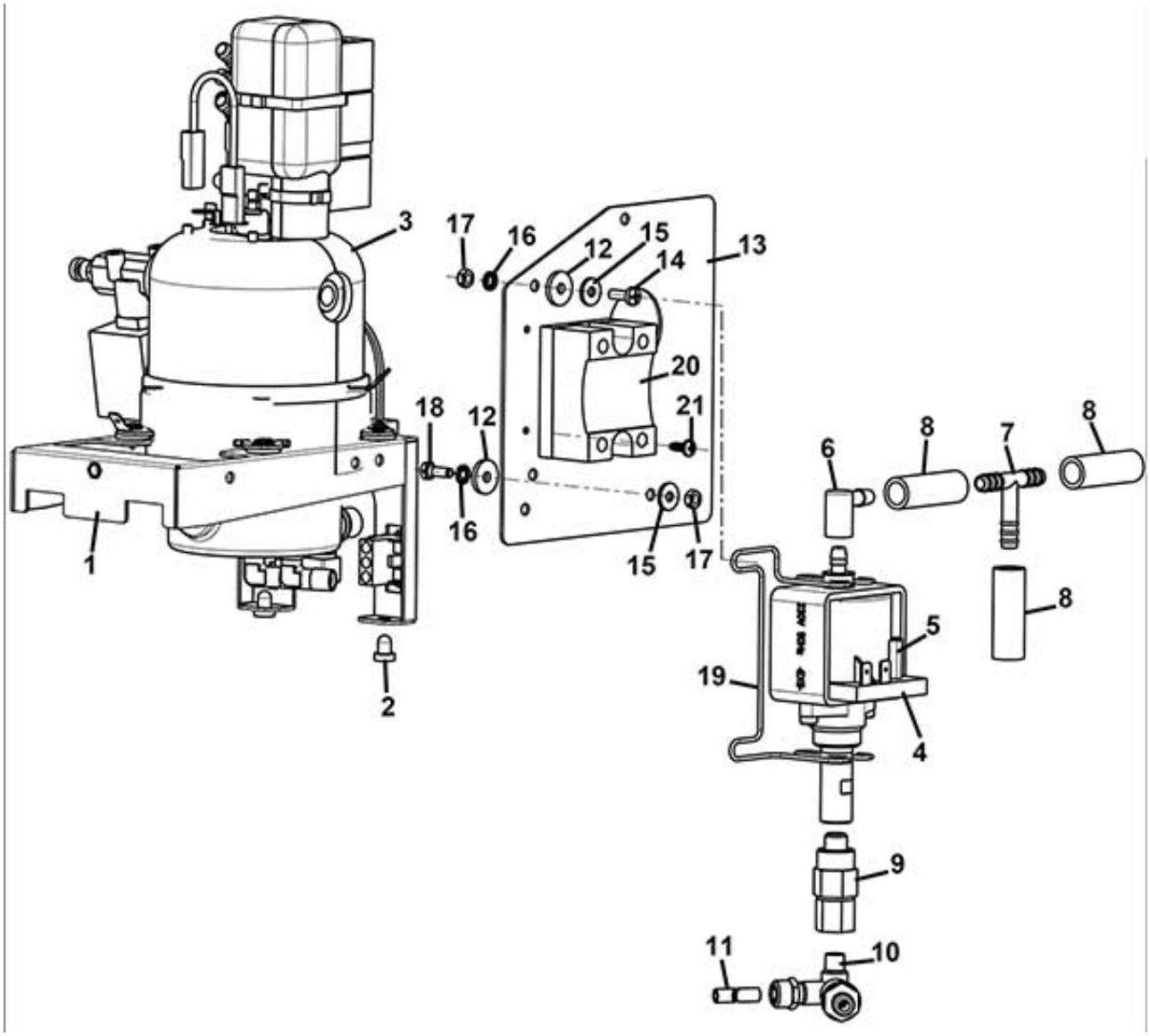

www.rheavendors.com tel: 0039 02 966 551 fax: 0039 02 96 55 086 email: rheavendors@rheavendors.com exclusive property of rheavendors group

ESPRESSO boiler support		
Pos.	**Code**	**Description**
1	Z0600019720NA	INOX BOILER SUPPORT
2	Z0020018061	SELECTION BUTTON PLUG
3		See table ESPRESSO BOILER
4/a	Z0110004041	PUMP EX5 230V-50HZ
4/b	Z0110004080	PUMP EX5 100V For 100V version
4/c	Z0110004042	PUMP EX5 220V 50-60HZ For version 220V
5	ELE0000915	PUMP THERMOPROTECTOR
6	Z0110004023	CONNECTOR
7	Z0100003022	T CONNECTOR 461 TS UL
8/a	TSIL05/08T-10	SILICON HOSE 5X8 MT.10
8/b	TSIL05/08T-50	SILICON HOSE 5X8 MT.50
9	Z0110002012R	§ SAFETY VALVE E:1/8M O:1/8F
10/a	Z0110004070	BY PASS VALVE 11 BAR
10/b	Z0110004060	BY PASS VALVE 8 BAR
11	TTEF04/06T	PTFE PIPE 4X6
12	1600001098	RUBBER SPACER D. 4,5
13	Z0010028234-03	SUPPORT PUMP
14	VIT0000013	SCREW HEAD TAP CAP M4X12
15	VIT0003301	WASHER 4,3X12X1,5
16	VIT0003103	SPRING WASHER 4,3
17	VIT0004503	NUT M4
18	VIT0000234	SCREW HEX HEAD M4X12 A2
19	Z0110004038	PUMP SUPPORT
21	VIT0002401	SCREW ST HEAD CAP M3.5X9.5 For 100V version
20	ELE0001012R	§ RELAY For 100V version --- Check the heating element connectors status

www.rheavendors.com tel: 0039 02 966 551 fax: 0039 02 96 55 086 email: rheavendors@rheavendors.com exclusive property of rheavendors group

ESPRESSO BOILER

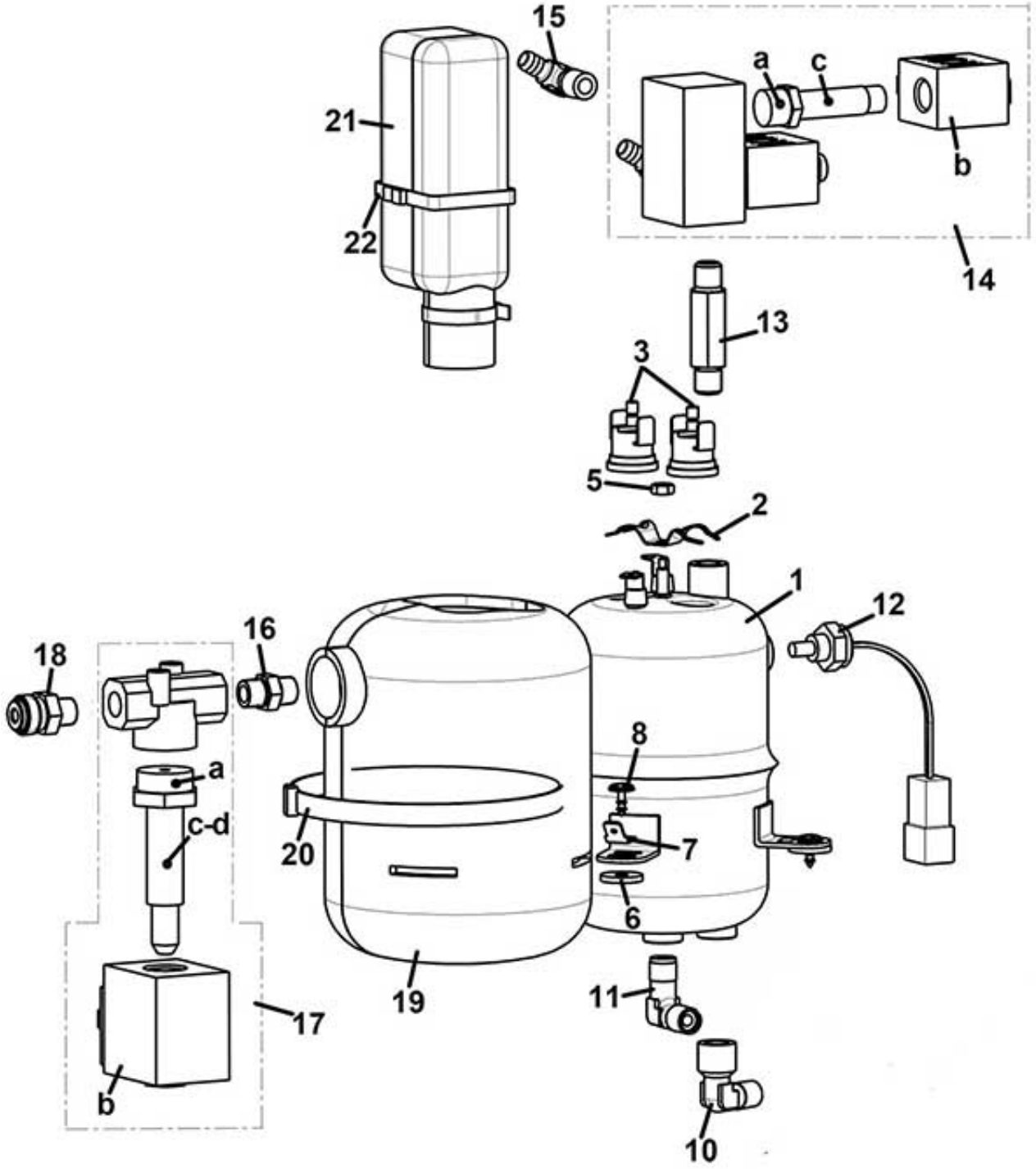

www.rheavendors.com tel: 0039 02 966 551 fax: 0039 02 96 55 086 email: rheavendors@rheavendors.com exclusive property of rheavendors group

ESPRESSO BOILER		
Pos.	**Code**	**Description**
1/a	Z0600019701CL	§ BOILER 1500 W 230V 400 CC From pos.1 to pos. 5
1/b	Z0600019704CL	1300W 100V STAINLESS STEEL From pos.1 to pos. 5. For 100V version
2	Z0600019188	THERMOSTAT CLIP
3	ELE0000982	CLIXSON 127°
5	VIT0004826	NUT M4X0,7
6	1600001098	RUBBER SPACER D. 4,5
7	Z0600019012	GROUND WIRING
8	VIT0002401	SCREW ST HEAD CAP M3.5X9.5
10/a	Z0100001085	ELBOW CONNECTOR For 100V version
10/b	Z0100001109	ELBOW CONNECTOR 6-1/8+OR For 230V version
11/a	Z0100001085	ELBOW CONNECTOR For 100V version
11/b	Z0100001109	ELBOW CONNECTOR 6-1/8+OR For 230V version
12	ELE0000975	PROBE
13	Z0110001220	STRAIGHT CONNECTOR MM 1/8 GC
14	Z0110001111	VALVE BLOCK.2 2W 24V DC 7W before order pls check ORING color of the sleeve
14/a	Z0110010138	SLEEVE D.13,9+WHITE OR
14/a	Z0110010148	SLEEVE D.14,9+GREEN OR
14/b	Z0110010135	COIL 7W 24V DC
14/c	Z0110010136	CORE+SPRING
15	Z0100001102	CONNECTOR 1/8"-Ø7,2 90°
16	Z0100001084	NIPPLE 1/8
17_1	Z0110001112	VALVE 3W 1/8 24V DC
17_1/a	Z0110010142	SLEEVE
17_1/b	Z0110010141	COIL 24V DC
17_1/c	Z0110010144	CORE+SPRING
17_1/d	Z0110010146	SPRING
17_2	Z0110001072	VALVE 3W 1/8 24DC O
17_2/a		COMPONENT NO MORE SOLD
17_2/b	Z0110010065	COIL 8 W 24 DC
17_2/c-d	Z0110010020	§ CORE
18	Z0100001070	STRAIGHT CONNECTOR 800 4-1/8
19	Z0600019195	INSULATION SHELL
20	FASC000214	PLASTIC CLIP BLACK 7,8X365
21	Z0600019197	EV HOUSING INSULATION
22	FASC000215	PLASTIC CLIP BLACK 2,6X200

www.rheavendors.com tel: 0039 02 966 551 fax: 0039 02 96 55 086 email: rheavendors@rheavendors.com exclusive property of rheavendors group

mixer

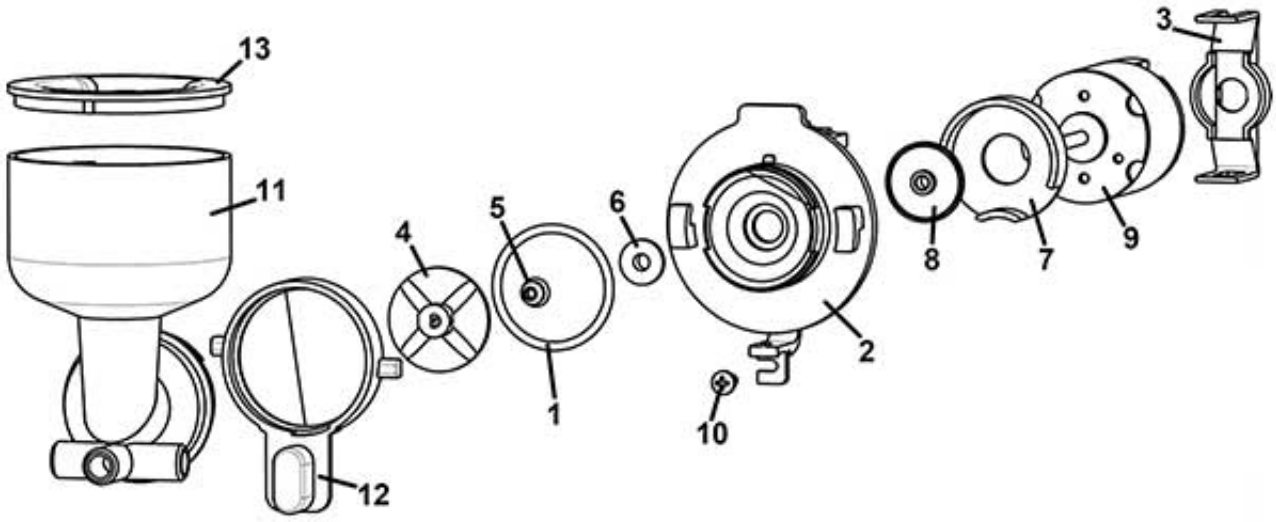

www.rheavendors.com tel: 0039 02 966 551 fax: 0039 02 96 55 086 email: rheavendors@rheavendors.com exclusive property of rheavendors group

mixer		
Pos.	**Code**	**Description**
1	GUA0000084	OR 3131 RED SILICONE A60
2	Z0080100005	MOTOR MIXER BASE
3	Z0080100009IC	MIXER MOTOR SUPPORT RAL2011
4	Z0080100011	MIXER FAN
5	Z0080100102	MIXER SHAFT GASKET
6	Z0080100015	MIXER BUSH
7	Z0080100023IC	MIXER COVER RAL2011
8	Z0080100024	MIXER FAN
9	Z0090003023	MIXER MOTOR 24V DC SHAFT D.4
10	VIT0002401	SCREW ST HEAD CAP M3.5X9.5
11/a	Z0080200101L	MIXING BOWL L.W/H20 BREAKER
11/b	Z0080200102R	MIXING BOWL R.W/H20 BREAKER
11/c	Z0080200103C	MIXING BOWL F.W/H20 BREAKER
12	Z0080100006IC	LOCK RING RAL2011
13	Z0080100008	UPPER RING
100	Z0080100001R	§ MIXER BOWL BASE+MOTOR (from pos.1 to pos.9)

www.rheavendors.com tel: 0039 02 966 551 fax: 0039 02 96 55 086 email: rheavendors@rheavendors.com exclusive property of rheavendors group

GRINDER

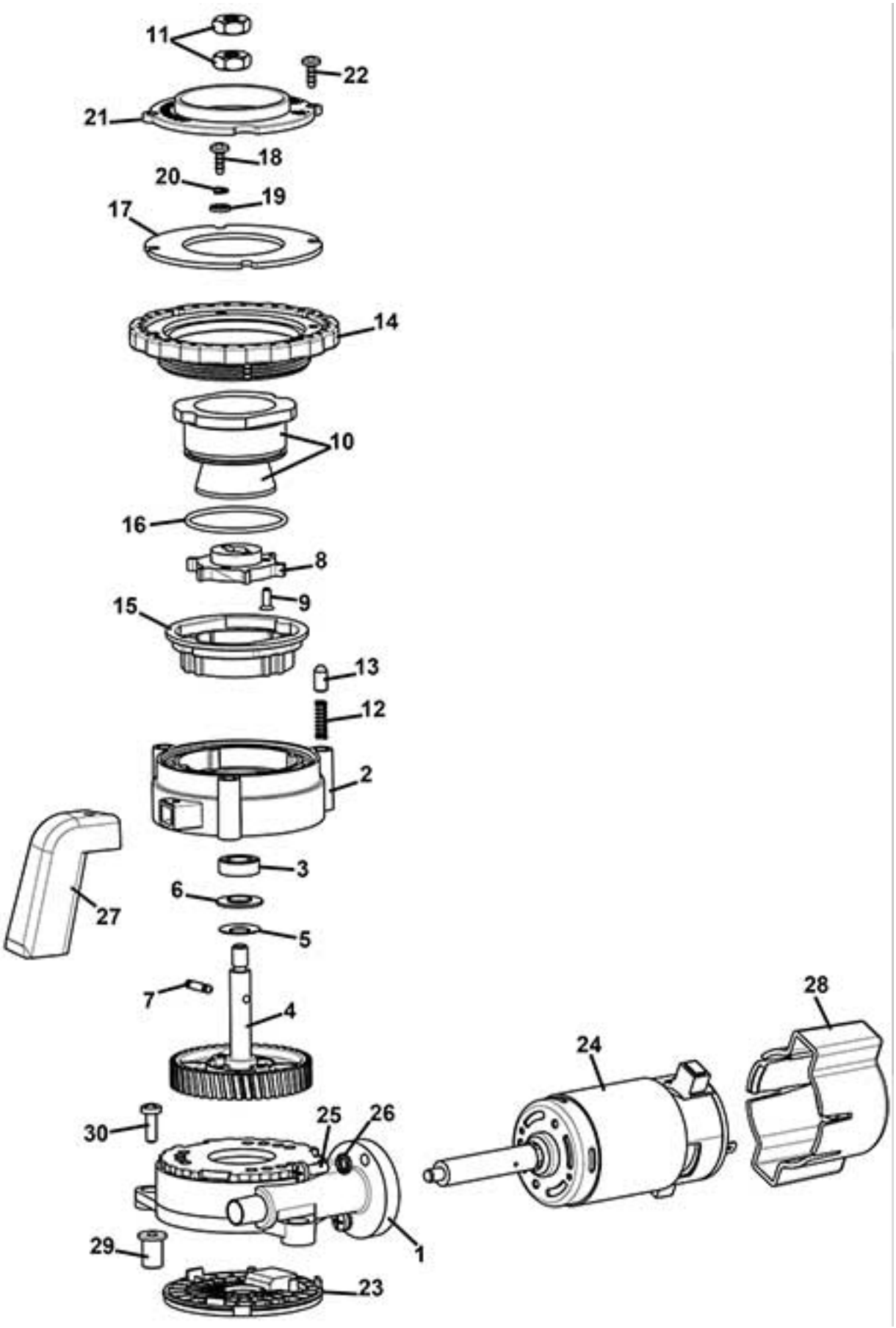

www.rheavendors.com tel: 0039 02 966 551 fax: 0039 02 96 55 086 email: rheavendors@rheavendors.com exclusive property of rheavendors group

GRINDER		
Pos.	**Code**	**Description**
1	Z0320001639NAR	§ MOTOR SUPPORT BLACK+PLUG
2	Z0320001602NAR	GRINDER BLADES SUPPORT
3	VIT0009325	BEARING
4	Z0320001608R	§ WHEEL+SHAFT+MAGNETS
5	Z0320001629	CUP SPRING 16x8,2 SP. 0,4
6	Z0320001625	BUSH
7	Z0320001704	GRINDER ROTATION PIN REINFORCE
8	Z0320001636	EJECTOR
9	VIT0000121	SCREW COUNT FLAT HEAD M3X8
10	Z0320001680	CONIC BLADES PLUS
11	Z0320001642	LOWER GRINDER FIXING NUT
12	Z0320001643	SPRING D.4X15X0,6
13	Z0320001624	REGULATION PIN
14	Z0320001605NAR	§ REGULATION RING NUT BLACK
15	Z0320001635-03NA	GRINDER SUPPORT BLACK
16	GUA0000124	SILICONE OR 2137
17	Z0320001622	UPPER GRINDER FIXING
18	VIT0002469	SCREW HEAD TAP M3.5X10
19	Z0320001666	SPACER D.4x7x2
20	VIT0003103	SPRING WASHER 4,3
21	Z0320001607NA	DUCT BLACK
22	VIT0002469	SCREW HEAD TAP M3.5X10
23	Z0320001604NA	PLUG BLACK
24/a	Z0090003047	GRINDER MOTOR 230V DC
24/b	Z0090003048	GRINDER MOTOR 120V
24/c	Z0090002236	GRINDER MOTOR 100V
25	VIT0000013	SCREW HEAD TAP CAP M4X12
26	VIT0003103	SPRING WASHER 4,3
27	Z0320004736-04	GRINDER CHUTE R.2011
28	Z0320001615NA	GRINDER SENSOR COVER BLACK
29	Z0320001628	NO-VIBRATION BUSH
30	VIT0000012	SCREW HEAD TAP CAP M4X10
100	Z0320001601CL5CAL	§GRINDER PREGRINDED VRFX PLUS From pos.1 to pos. 28
101	Z0320001601CL5AL	§GRINDER VARIFLEX BREWER PLUS From pos.1 to pos. 28
103	Z0320001601CLGCA	§ GRINDER-VFX 100V-PREGRINDED From pos.1 to pos. 28

www.rheavendors.com tel: 0039 02 966 551 fax: 0039 02 96 55 086 email: rheavendors@rheavendors.com exclusive property of rheavendors group

PRO BREWER SUPPORT+MOTOR

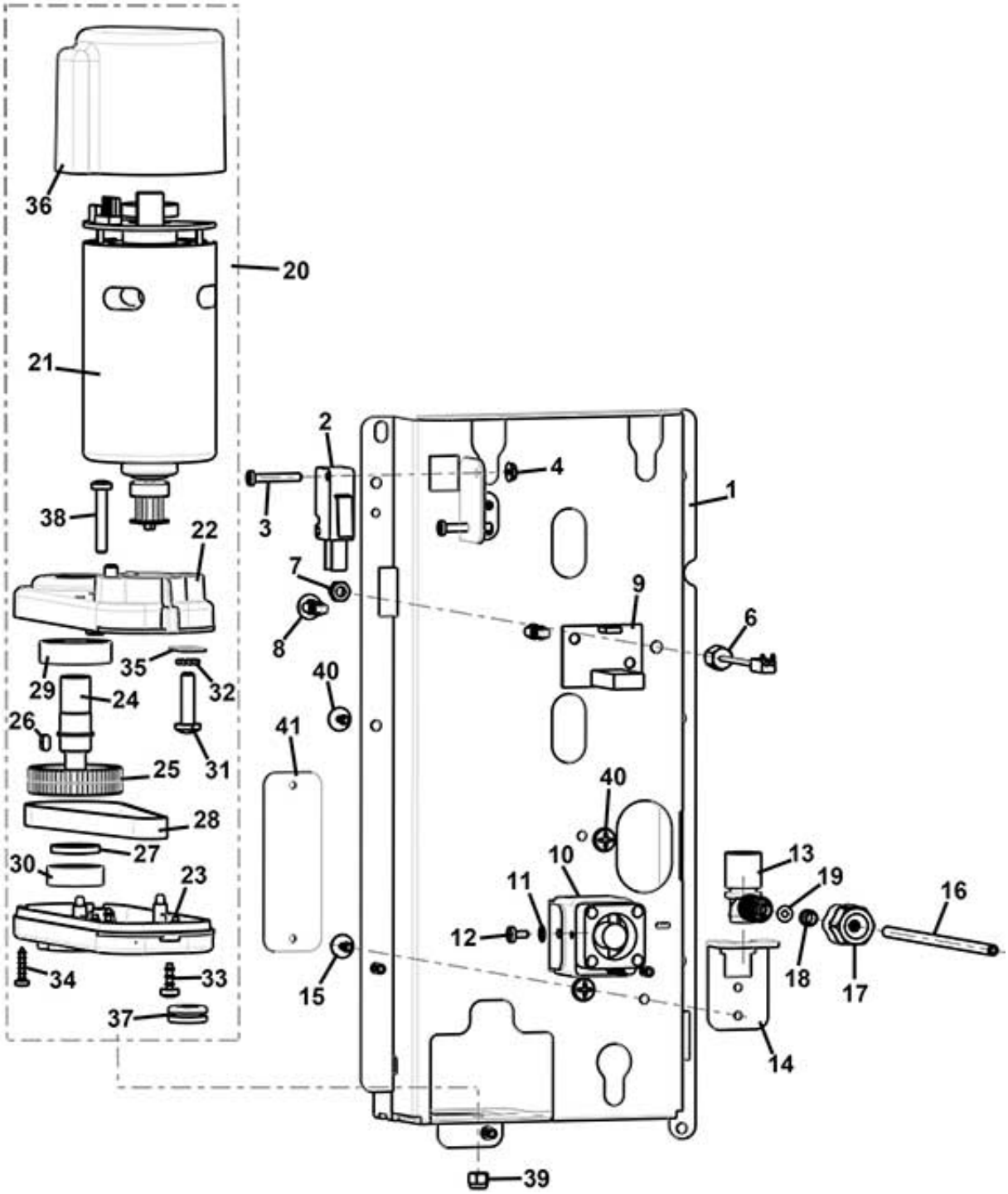

www.rheavendors.com tel: 0039 02 966 551 fax: 0039 02 96 55 086 email: rheavendors@rheavendors.com exclusive property of rheavendors group

PRO BREWER SUPPORT+MOTOR		
Pos.	**Code**	**Description**
1	Z0260014002	VARIFLEX BREWER SUPPORT
2	ELE0001522	MICROSWITCH
3	VIT0000006	SCREW HEAD TAP CAP M3X16
4	VIT0004701	NUT M3
6	ELE0000931	PROBE NTC 10K/TE
7	VIT0004816	NUT M4
8	ELE0062020	BOARD SUPPORT
9		Heater board sold with code ELE0000467-02
10	ELE0000467-02	FAN HEATER 24V DC + BOARD
11	VIT0003102	SPRING WASHER 3,2
12	VIT0000002	SCREW HEAD TAP CAP M3X6
13	Z0250014084-02	FEMALE CONNECTOR
14	Z0260014009-01	H2O CONNECTOR SUPPORT
15	VIT0002009	SCREW ST HEAD CAP M3.5X6.5
16	TTEF02/04T	PTFE PIPE 2X4
17	Z0250014086	NUT
18	Z0100002014	LOCKING RING SO1-4
19	GUA0000061	OR 2010 VITON 80 BLACK
20	Z0090002250R	§ VARIFLEX BREW. GEARBOX MOTOR From pos. 21 to pos. 37 (new version components)
21	Z0090002252-01	§ MOTOR 24V DC
22	Z0090002222NA	MOTOR UPPER CASE RAL9005
23	Z0090002223NA	MOTOR LOWER CASE RAL9005
24	Z0090002224	FEMALE CONNECTOR SHAFT
25	Z0090002255AN	PULLEY
26	VIT0006703	CLAMP
27	Z0090002226	SPACER
28	Z0090002258	BELT
29	VIT0009324	BEARING
30	VIT0009320	BEARING
31	VIT0000017	SCREW HEAD TAP CAP M5X20
32	VIT0003104	SPRING WASHER 5,3
33	VIT0002469	SCREW HEAD TAP M3.5X10
34	VIT0002014	SCREW ST HEAD CAP M2.9X13
35	Z0090002240	MOTOR SPACER
36	Z0090002235CK	MR GV BOARD COVER R.7037
37	GUA0010501	ELECTRICAL GROMMET DG 7,5
38	VIT0000015	SCREW HEAD TAP CAP M4X25
39	VIT0004815	NUT M4
40	VIT0002401	SCREW ST HEAD CAP M3.5X9.5
41		PARTS NO MORE AVAILABLE
100	Z0250014086R	§ WATER INLET TUBE 0,15 mt From pos. 16 to pos. 19
101	Z0090002224R	§ FEMALE CONNECTOR SHAFT From pos.24 to pos.30 excluded pos.28

www.rheavendors.com tel: 0039 02 966 551 fax: 0039 02 96 55 086 email: rheavendors@rheavendors.com exclusive property of rheavendors group

PROFESSIONAL BREWER GROUP D.45

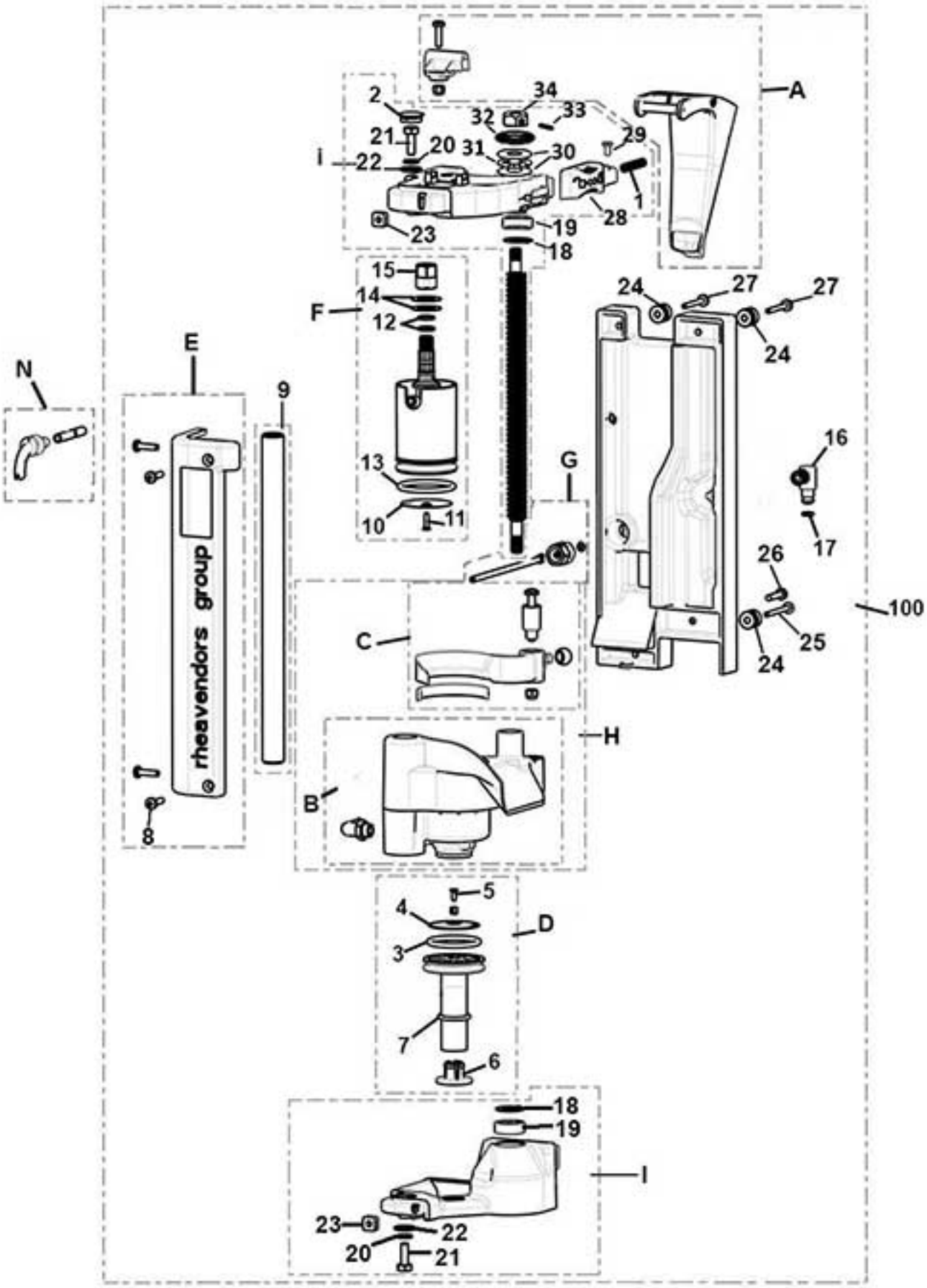

www.rheavendors.com tel: 0039 02 966 551 fax: 0039 02 96 55 086 email: rheavendors@rheavendors.com exclusive property of rheavendors group

PROFESSIONAL BREWER GROUP D.45		
Pos.	**Code**	**Description**
A	Z0250014008R	§ CHUTE D. 45
1	Z0250014081	SPRING
2	GUA0011022	PLUG
B	Z0250014022R	§ INFUSION CHAMBER D.45 included internal components and elbow
C	Z0250014024R	§ BRUSH D.45
D	Z0250014028R	§ LOWER FILTER HOLDER D.45
3	GUA0000097	OR 4131 RED SILICONE LSR70
4	Z0250014029	COFFEE FILTER DIAM. 37.3
5	VIT0000121	SCREW COUNT FLAT HEAD M3X8
6	Z0250014027R1	LOWER PISTON LOCK+SET SCREW
7	GUA0000103	OR 3075 SILICON
E	Z0250014019R	§ FRONTAL COVER
8	VIT0001009	SCREW HEAD TAP CAP M4X16
9	Z0250014013-04	CYLINDRICAL GUIDE
F	Z0250014045R	§ UPPER FILTER HOLDER D.45
10	Z0250008211	COFFEE FILTER 37,3
11	VIT0000129	SCREW COUNT HEAD M3X12
12	GUA0000045	OR 108 VITON 80 BLACK
13	GUA0000067	OR 4143 RED SILICONE LSR70
14	Z0250014048	SPRING
15	Z0250014086	NUT
16	Z0250014085	MALE CONNECTOR
17	GUA0000004	OR 104 NBR AL 75 BLACK
G	Z0250014086R	§ WATER INLET TUBE 0,15 mt
H	Z0250014020R	§ INFUSION CHAMBER D.45
I	Z0250014005R2	§UPPER SUPPORT WITHOUT CHUTE
L	Z0250014012R	§ LOWER SUPPORT
18	Z0250014077	SPACER
19	VIT0009320	BEARING
20	VIT0003113	SPRING WASHER 6,4
21	VIT0000249	SCREW HEX HEAD M6X16
22	Z0250014079	WASHER D.15 D.6,5 SP.1,5
23	VIT0009112	NUT M4
24	Z0250014072	PIN
25	VIT0000033	SCREW HEAD TAP CAP M4X35
26	VIT0001011	SCREW HEAD TAP CAP M4X20
27	VIT0001006	SCREW HEAD TAP CAP M4X30
28	Z0250014082	BREWER STOPPER BUTTON
29	VIT0002009	SCREW ST HEAD CAP M3.5X6.5
30	VIT0009318	SPACER WASHER
31	VIT0009317	BEARING
32	GUA0001007	V RING GASKET VA16
33	VIT0007011	SET SCREW 4X4
34	Z0250014071	NUT M8
N	Z0020039539R	§ SPOUT DELIVERY D.4
100	Z0250014000CL	COFFEE BREWER VARIFLEX D 45

www.rheavendors.com tel: 0039 02 966 551 fax: 0039 02 96 55 086 email: rheavendors@rheavendors.com exclusive property of rheavendors group

PROFESSIONAL BREWER GROUP D.36

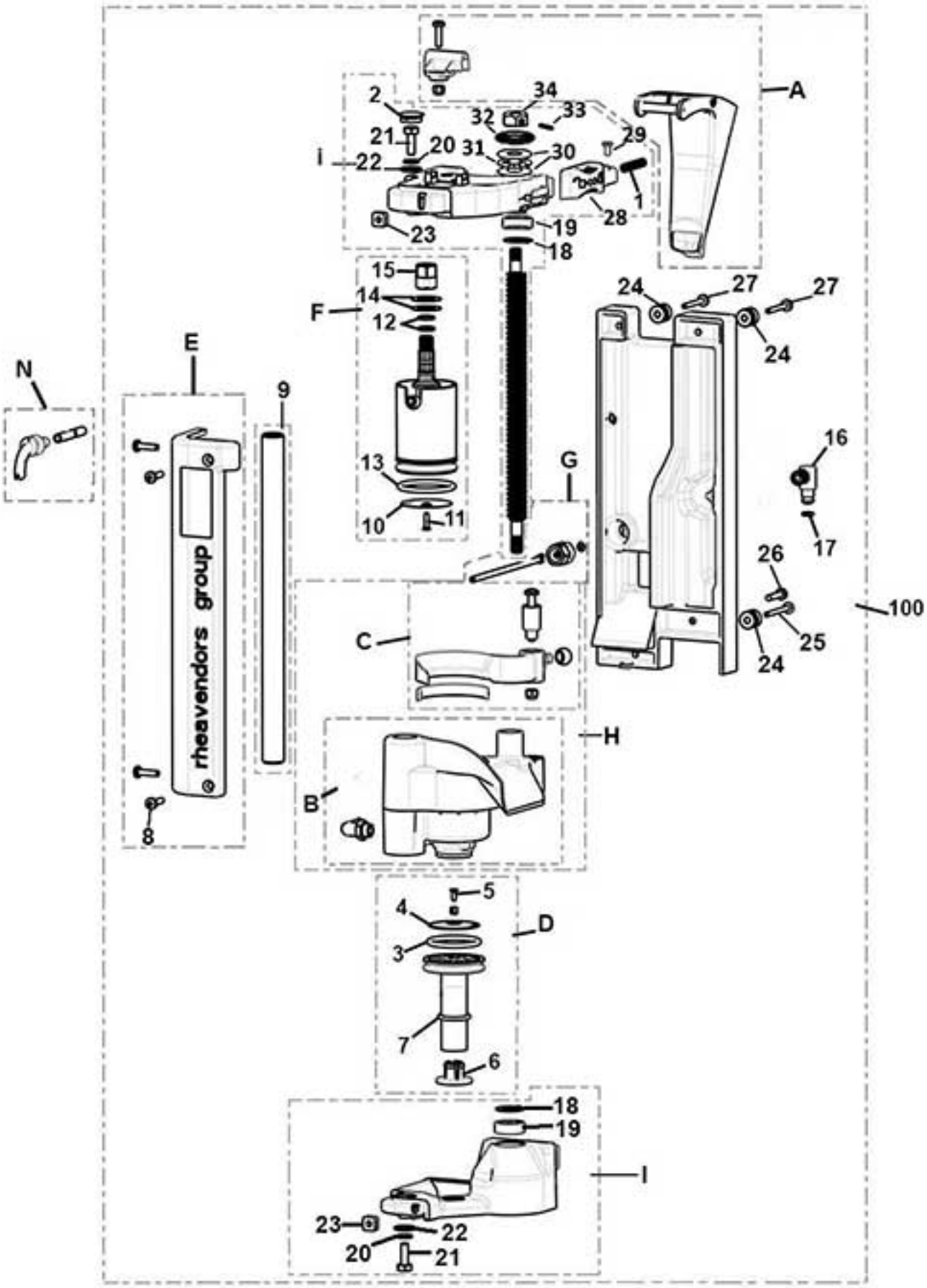

www.rheavendors.com tel: 0039 02 966 551 fax: 0039 02 96 55 086 email: rheavendors@rheavendors.com exclusive property of rheavendors group

PROFESSIONAL BREWER GROUP D.36		
Pos.	**Code**	**Description**
A	Z0250014033R	§ CHUTE D. 36
1	Z0250014081	SPRING
2	GUA0011022	PLUG
B	Z0250014032R	§ INFUSION CHAMBER D.36 included internal components and elbow
C	Z0250014034R	§ BRUSH D.36
D	Z0250014038R	§ LOWER FILTER HOLDER D.36
3	GUA0000080	OR 4112 RED SILICONE LSR70
4	Z0250008019	COFFEE FILTER
5	VIT0000121	SCREW COUNT FLAT HEAD M3X8
6	Z0250014027R1	LOWER PISTON LOCK+SET SCREW
7	GUA0000103	OR 3075 SILICON
E	Z0250014019R	§ FRONTAL COVER
8	VIT0001009	SCREW HEAD TAP CAP M4X16
9	Z0250014013	
F	Z0250014040R	§ UPPER FILTER HOLDER D.36
10	Z0250008099	COFFEE FILTER 33,4
11	VIT0000129	SCREW COUNT HEAD M3X12
12	GUA0000045	OR 108 VITON 80 BLACK
13	GUA0000080	OR 4112 RED SILICONE LSR70
14	Z0250014048	SPRING
15	Z0250014086	NUT
16	Z0250014085	MALE CONNECTOR
17	GUA0000004	OR 104 NBR AL 75 BLACK
G	Z0250014086R	§ WATER INLET TUBE 0,15 mt
H	Z0250014030R	§ CHAMBER D.36
I	Z0250014005R2	§UPPER SUPPORT WITHOUT CHUTE
L	Z0250014012R	§ LOWER SUPPORT
18	Z0250014077	SPACER
19	VIT0009320	BEARING
20	VIT0003113	SPRING WASHER 6,4
21	VIT0000249	SCREW HEX HEAD M6X16
22	Z0250014079	WASHER D.15 D.6,5 SP.1,5
23	VIT0009112	NUT M4
24	Z0250014072	PIN
25	VIT0000033	SCREW HEAD TAP CAP M4X35
26	VIT0001011	SCREW HEAD TAP CAP M4X20
27	VIT0001006	SCREW HEAD TAP CAP M4X30
28	Z0250014082	BREWER STOPPER BUTTON
29	VIT0002009	SCREW ST HEAD CAP M3.5X6.5
30	VIT0009318	SPACER WASHER
31	VIT0009317	BEARING
32	GUA0001007	V RING GASKET VA16
33	VIT0007011	SET SCREW 4X4
34	Z0250014071	NUT M8
N	Z0020039539R	§ SPOUT DELIVERY D.4
100	Z0250014060CL	§ COFFEE BREWER VARIFLEX D.36

www.rheavendors.com tel: 0039 02 966 551 fax: 0039 02 96 55 086 email: rheavendors@rheavendors.com exclusive property of rheavendors group

water inlet panel

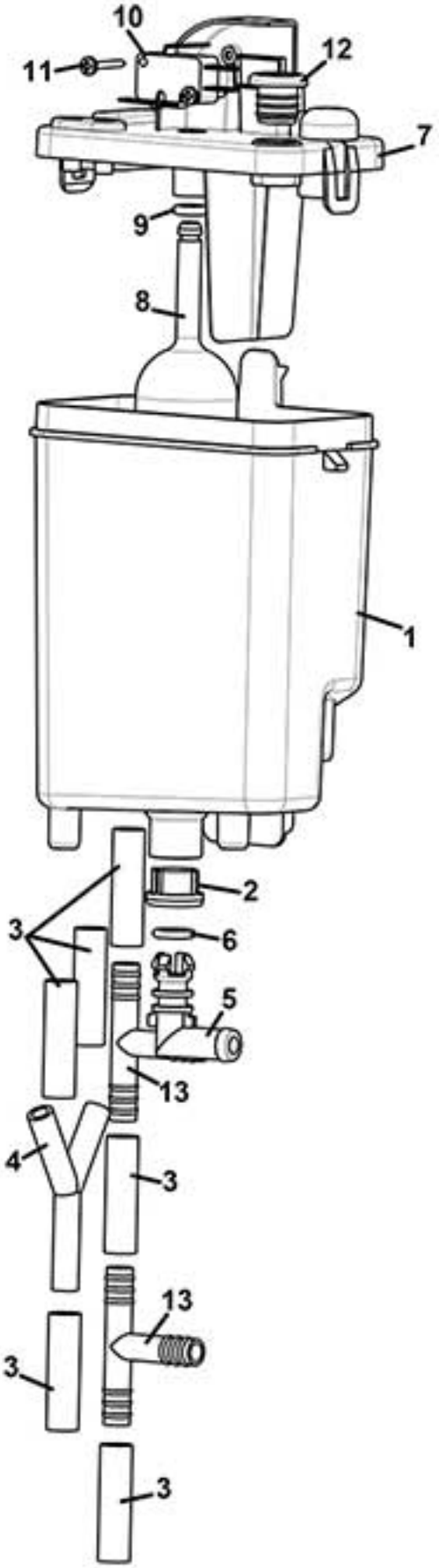

www.rheavendors.com tel: 0039 02 966 551 fax: 0039 02 96 55 086 email: rheavendors@rheavendors.com exclusive property of rheavendors group

water inlet panel		
Pos.	**Code**	**Description**
1	Z0800013041	AIR BREAK TANK
2	Z0110020007	PLASTIC FILTER DIAM. 20
3/a	TSIL07/11T-10	SILICON HOSE 7X11 MT.10
3/b	TSIL07/11T-50	SILICON HOSE 7X11 MT.50
4	Z0100001065	CONNECTOR "Y"
5	Z0800009211	ELBOW CONNECTOR
6	GUA0000043	OR 109 NBR AL 75 BLACK
7	Z0800013043	AIR BREAK COVER
8	Z0800013046	AIR BREAK WASTE FLOAT
9	GUA0000082	SILICON GASKET D.6
10	ELE0001514	MICROSWITCH 3A 125-250VA
11	VIT0002013	SCREW ST HEAD CAP M2.9X19
12	Z0800013051	VALVE GASKET
13	Z0100003023	T CONNECTOR 462 TS UL

www.rheavendors.com tel: 0039 02 966 551 fax: 0039 02 96 55 086 email: rheavendors@rheavendors.com exclusive property of rheavendors group

UNPLUMBED WATER TANK

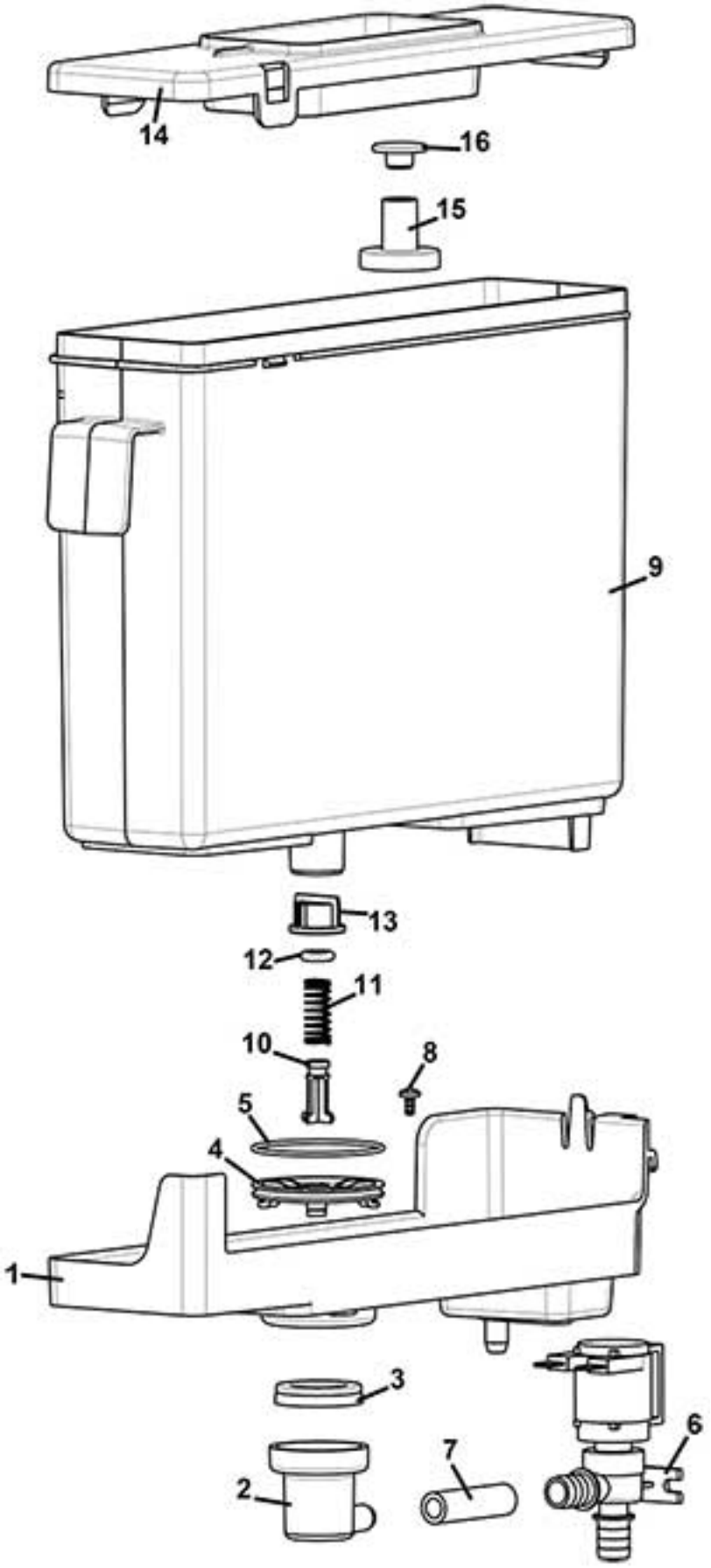

www.rheavendors.com tel: 0039 02 966 551 fax: 0039 02 96 55 086 email: rheavendors@rheavendors.com exclusive property of rheavendors group

UNPLUMBED WATER TANK		
Pos.	**Code**	**Description**
1	Z0800012516	H2O TANK HOLDER
2	Z0800012512	WATER TANK ELBOW CONNECTOR
3	GUA0002100	SILICON GASKET
4	Z0800012515NA	RING GASKET BLACK
5	GUA0000046	OR 2137
6	Z0110001103	VALVE 2W 24V DC
7/a	TSIL07/11T-10	SILICON HOSE 7X11 MT.10
7/b	TSIL07/11T-50	SILICON HOSE 7X11 MT.50
8	VIT0002015	SCREW ST HEAD CAP M3.5X9.5
9	Z0800012506-03	H2O TANK
10	Z0800012009	WATER TANK CLOSING PIN
11	Z0800012012	PIN SPRING
12	GUA0000082	SILICON GASKET D.6
13	Z0110020011	FILTER
14	Z0800012507	H2O TANK LID
15	Z0020037046	WASTE FLOAT RAL 3020
16	Z0020037045	WASTE FLOAT RAL 9005
100	Z0800012500CL	§ WATER TANK From pos. 9 to pos. 16

www.rheavendors.com tel: 0039 02 966 551 fax: 0039 02 96 55 086 email: rheavendors@rheavendors.com exclusive property of rheavendors group

products container

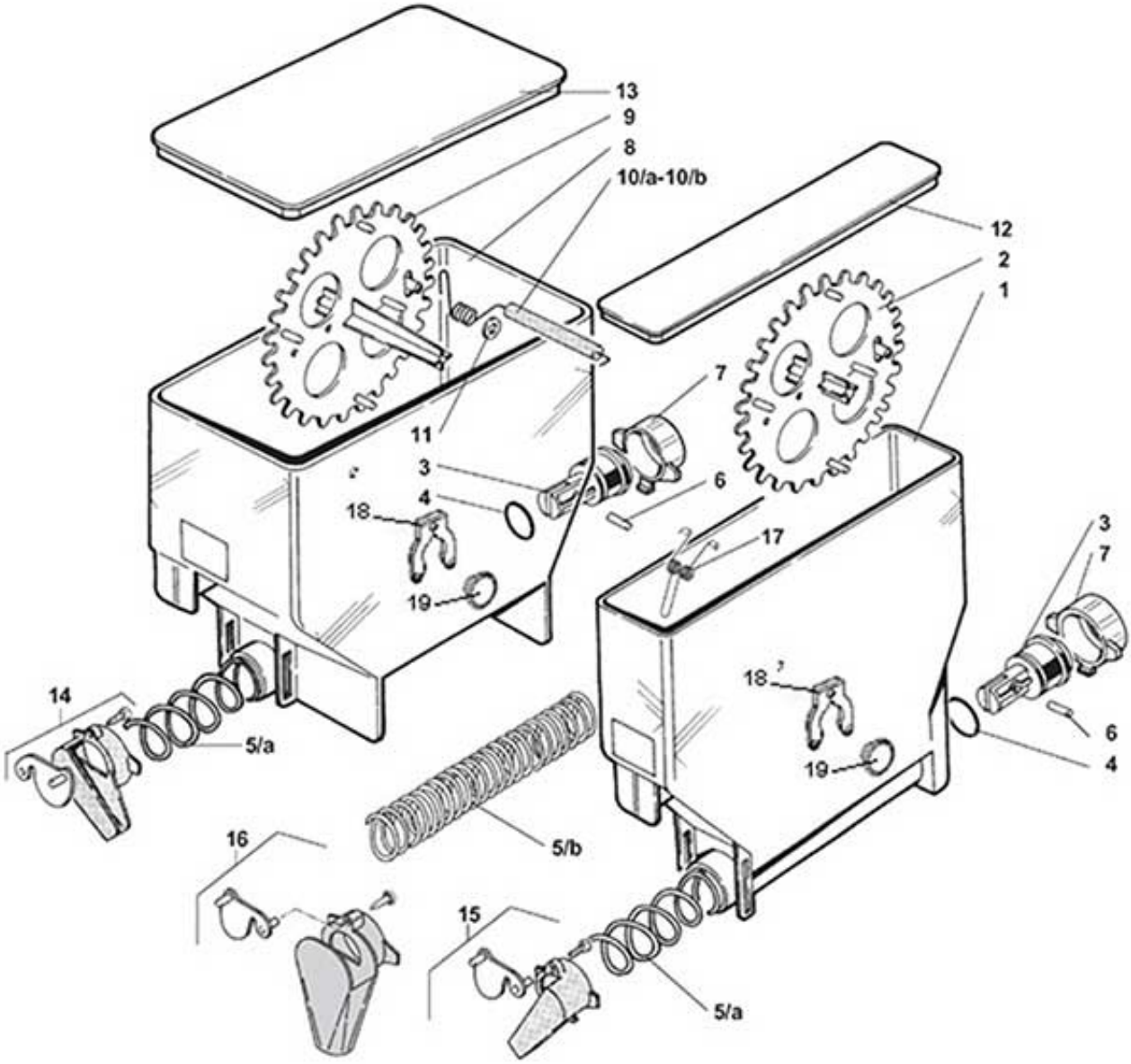

www.rheavendors.com tel: 0039 02 966 551 fax: 0039 02 96 55 086 email: rheavendors@rheavendors.com exclusive property of rheavendors group

products container		
Pos.	**Code**	**Description**
1	Z0230030500	INGREDIENT CANISTER 54 190
2	Z0230030236AB	§ WHEEL MM54
3	Z0230030012	SPIRAL PIN
4	GUA0000083	OR 123 RED SILICONE A70
5/a	Z0230030014	SPIRAL 18
5/b	Z0230030013	SPIRAL 9
6	VIT0005106	PIN 2X14
7	Z0230030011	REAR BUSH
8	Z0230030520	INGREDIENT CANISTER 110-190
9	Z0230030237AB	§ WHEEL MM110
10/a	Z0230030064	AGITATOR 112 - RIGHT OUTLET
10/b	Z0230030062	AGITATOR 112 - LEFT OUTLET
11	VIT0003210	WASHER 8,4X16X1,6
12	Z0230030156	CANISTER 54 LID
13	Z0230030158	CANISTER 110 LID
14/a	Z0230030058R	§ INGRED. CHUTE-RIGHT ORANGE
14/b	Z0230030044R	§ INGREDIENT CHUTE-RIGHT RED
15/a	Z0230030057R	§ INGREDIENT CHUTE-LEFT ORANGE
15/b	Z0230030043R	§ INGREDIENT CHUTE-LEFT RED
16	Z0230030059R	§ INGRED. CHUTE-FRONTALORANGE
17	Z0230030060-05	PRODUCT AGITATOR
18	Z0230030239	WHEEL PIN FORK
19	Z0230030238-02	WHEEL PIN
100	Z0230030522R	§ CAN. 110-190 AGIT.18 W/LID-R
101	Z0230030525R	§ CAN. 110-190 AGIT.18 W/LID-L
102	Z0230030506R	§ CANIS. 54-190 WHEEL18 W/LID
103	Z0230030502R	§ CANIS. 54-190 WHEEL9 W/LID

www.rheavendors.com tel: 0039 02 966 551 fax: 0039 02 96 55 086 email: rheavendors@rheavendors.com exclusive property of rheavendors group

coffee beans container

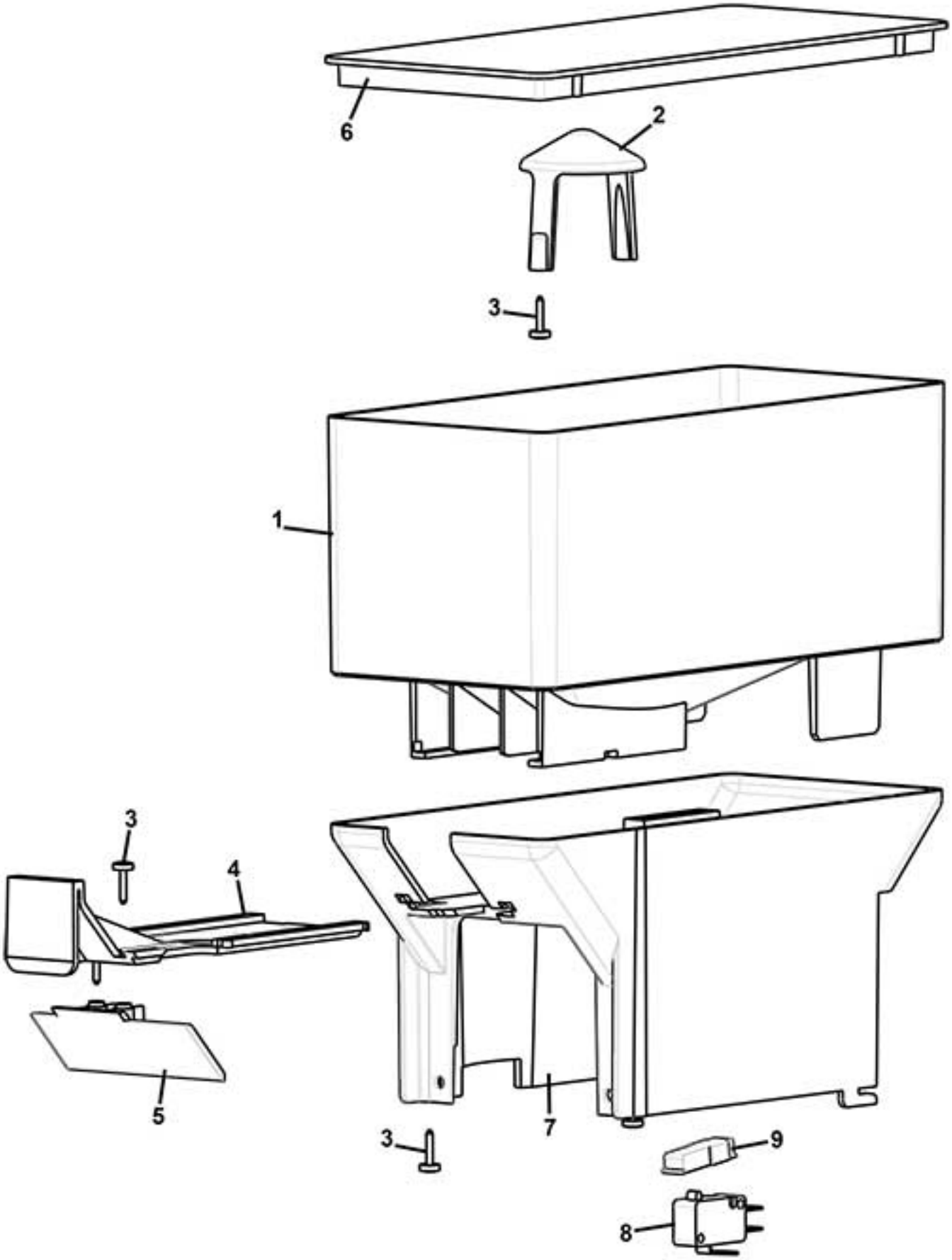

www.rheavendors.com tel: 0039 02 966 551 fax: 0039 02 96 55 086 email: rheavendors@rheavendors.com exclusive property of rheavendors group

coffee beans container		
Pos.	**Code**	**Description**
1	Z0230015302TR	COFFEE BEANS HOPPER
2	Z0230015227TR	GRINDER COVER
3	VIT0002469	SCREW HEAD TAP M3.5X10
4	Z0230015303-01IC	COFFEE BEANS HOP. STOP.RAL2011
5	Z0230015306NA	REGUL. GRINDER STOPPER PLATE
6	Z0230015305CK	COFFEE BEANS HOP. LIDRAL7037
7	Z0232300002	GRINDER COVER
8	ELE0001522CL	§ MICROSWITCH + LEVER + FASTON
9	Z0230015307NA	BUTTON BLACK
100	Z0230015300R1	COFFEE BEANS HOPPER From pos.1 to pos.6

www.rheavendors.com tel: 0039 02 966 551 fax: 0039 02 96 55 086 email: rheavendors@rheavendors.com exclusive property of rheavendors group

OPTIONAL KIT

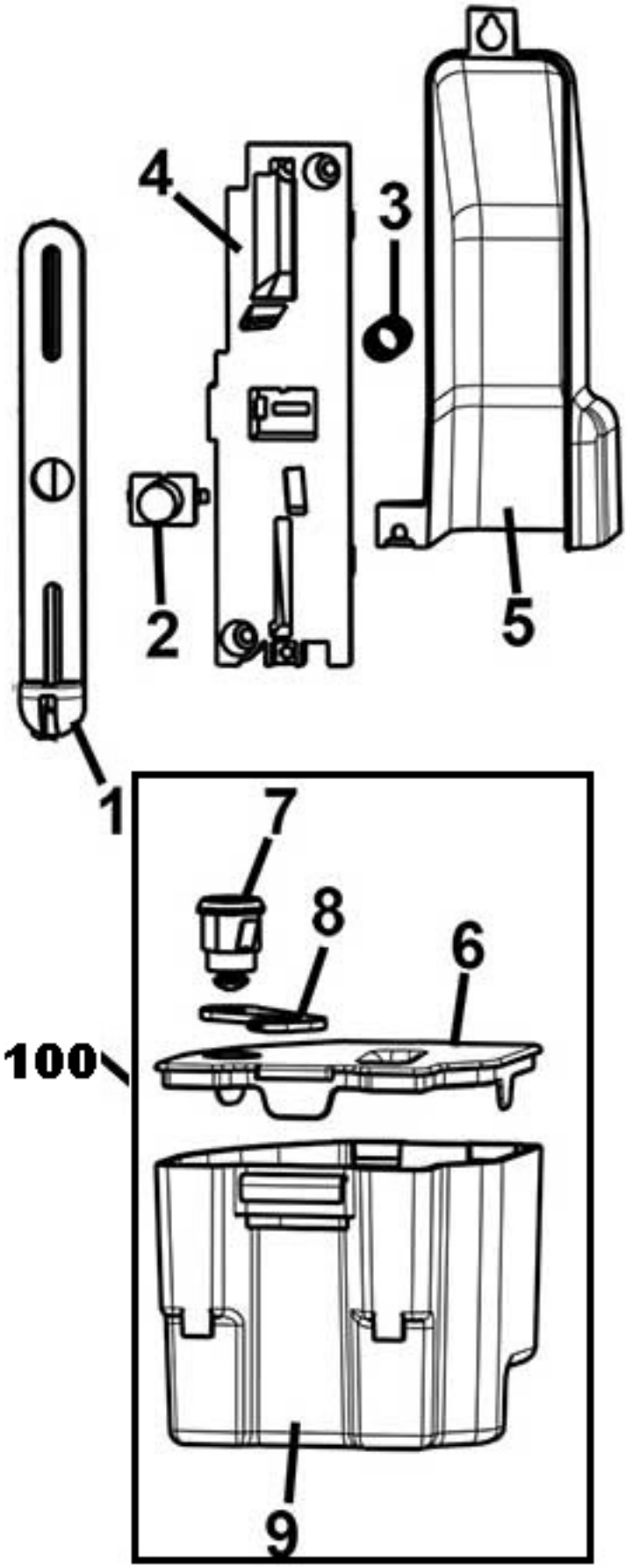

www.rheavendors.com tel: 0039 02 966 551 fax: 0039 02 96 55 086 email: rheavendors@rheavendors.com exclusive property of rheavendors group

OPTIONAL KIT		
Pos.	**Code**	**Description**
1	Z0020035031NA	COIN ENTRY PLATE BLACK
2	Z0020035033NA	COIN RETURN BUTTON BLACK
3	Z0020035034	COIN RETURN BUTTON SPRING
4	Z0020035032NA	PAYM SYSTEM SUPPORT
5	Z0020037656NA	PAY. SYSTEM COVER
6	Z0030010212NA	COINS BOX COVER
7	SER0000015	LOCK MM20 C.3430
8	Z0020037128	COIN BOX HOOK
9	Z0030010211NA	COINS BOX
100	Z0030010210R	§ COIN BOX Include Pos. 6 + 7 + 8 + 9
200	D1019600A1000	KIT W/FIT W/O MECH RAL9005 To be ordered to RV INDUSTRIES
201	D1019600A0000	KIT W/FIT W/O MECH RAL9006 To be ordered to RV INDUSTRIES

www.rheavendors.com tel: 0039 02 966 551 fax: 0039 02 96 55 086 email: rheavendors@rheavendors.com exclusive property of rheavendors group

WIRINGS

www.rheavendors.com tel: 0039 02 966 551 fax: 0039 02 96 55 086 email: rheavendors@rheavendors.com exclusive property of rheavendors group

WIRINGS		
Pos.	**Code**	**Description**
1	CBLXSC0008	HEATER WIRING
2	CBLXSC0002	POWER WIRING 230V
3	CBLXSC0004	ACTUATOR WIRING 24V
4	CBLXSC0005	BOILER PUMP WIRING
5	CBLXSC0006	GRINDER WIRING
6	CBLA122002	SUPPLY DOOR 5/24V WIRING
7	CBLXSC0001	DOOR SWITCH WIRING
8	CBLXSC0042	LED SUPPLY WIRING
9	CBLXM00109	LIGHTING LABELS SHORT WIRING
10	CBLXM00110	MED LABELS ENLIGHTING WIRING
11	CBLXM00111	LABELS ENLIGHTENMENT WIRING
12	CBLXS00228	LED BOARD WIRING
13	CBLXM00108	LOGO ENLIGHTENMENT WIRING

www.rheavendors.com tel: 0039 02 966 551 fax: 0039 02 96 55 086 email: rheavendors@rheavendors.com exclusive property of rheavendors group

BRITA FILTER

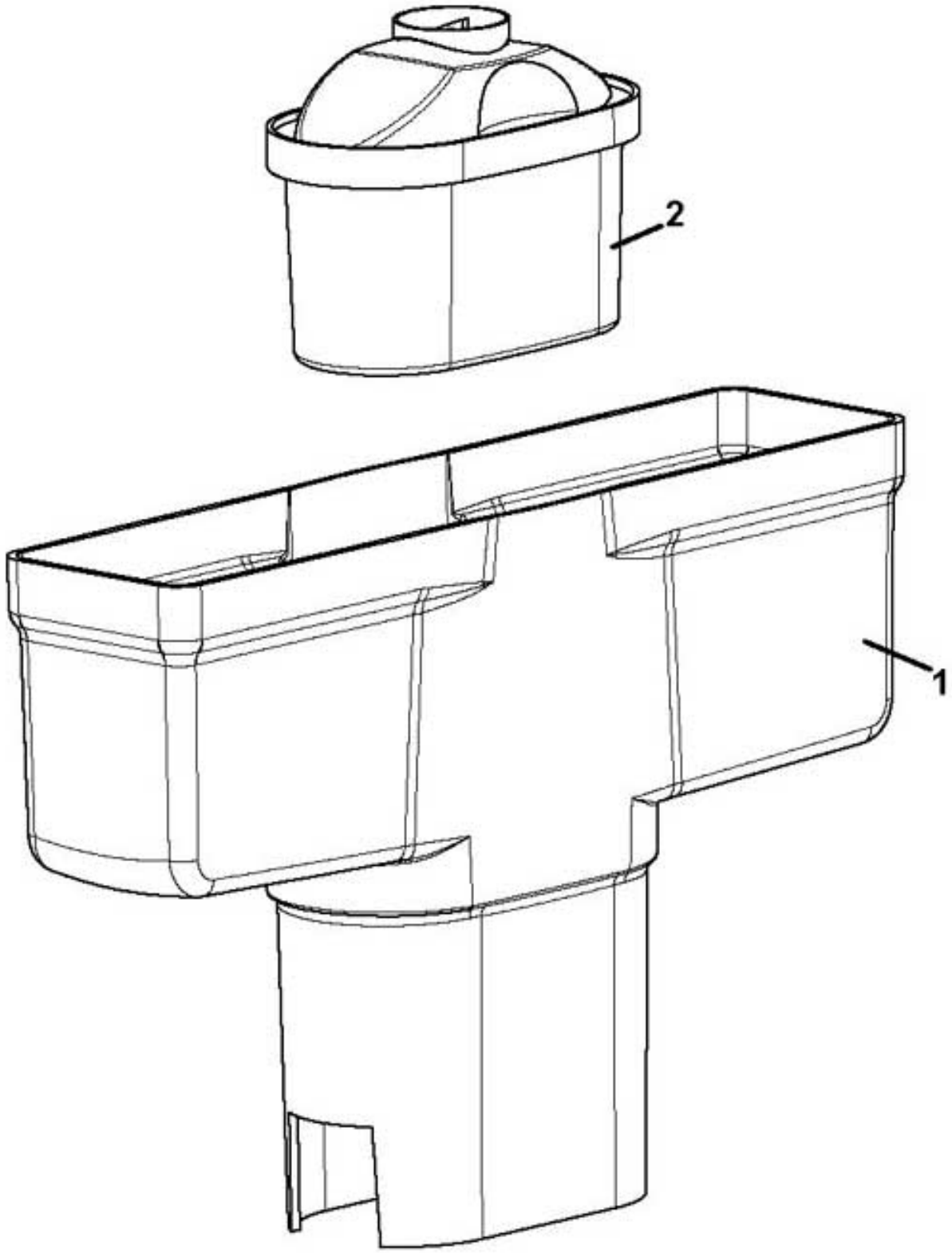

www.rheavendors.com tel: 0039 02 966 551 fax: 0039 02 96 55 086 email: rheavendors@rheavendors.com exclusive property of rheavendors group

BRITA FILTER		
Pos.	**Code**	**Description**
1	Z0800012522	BRITA MAXTRA 2020 FILTER SUPP.
2	Z0060001014	BRITA FILTER MAXTRA +
3	Z0800012513R1	ADAPTOR W/MAXT BRITA+FLTER KIT (Pos.1 + 2)

www.rheavendors.com tel: 0039 02 966 551 fax: 0039 02 96 55 086 email: rheavendors@rheavendors.com exclusive property of rheavendors group