vending machine

file immagini/ricambi/copertine/rhea bl grande vho e new hydraulic.jpg NOT exists!!!!!!

spare parts manual

www.rheavendors.com tel: 0039 02 966 551 fax: 0039 02 96 55 086 email: rheavendors@rheavendors.com exclusive property of rheavendors group

cabinet

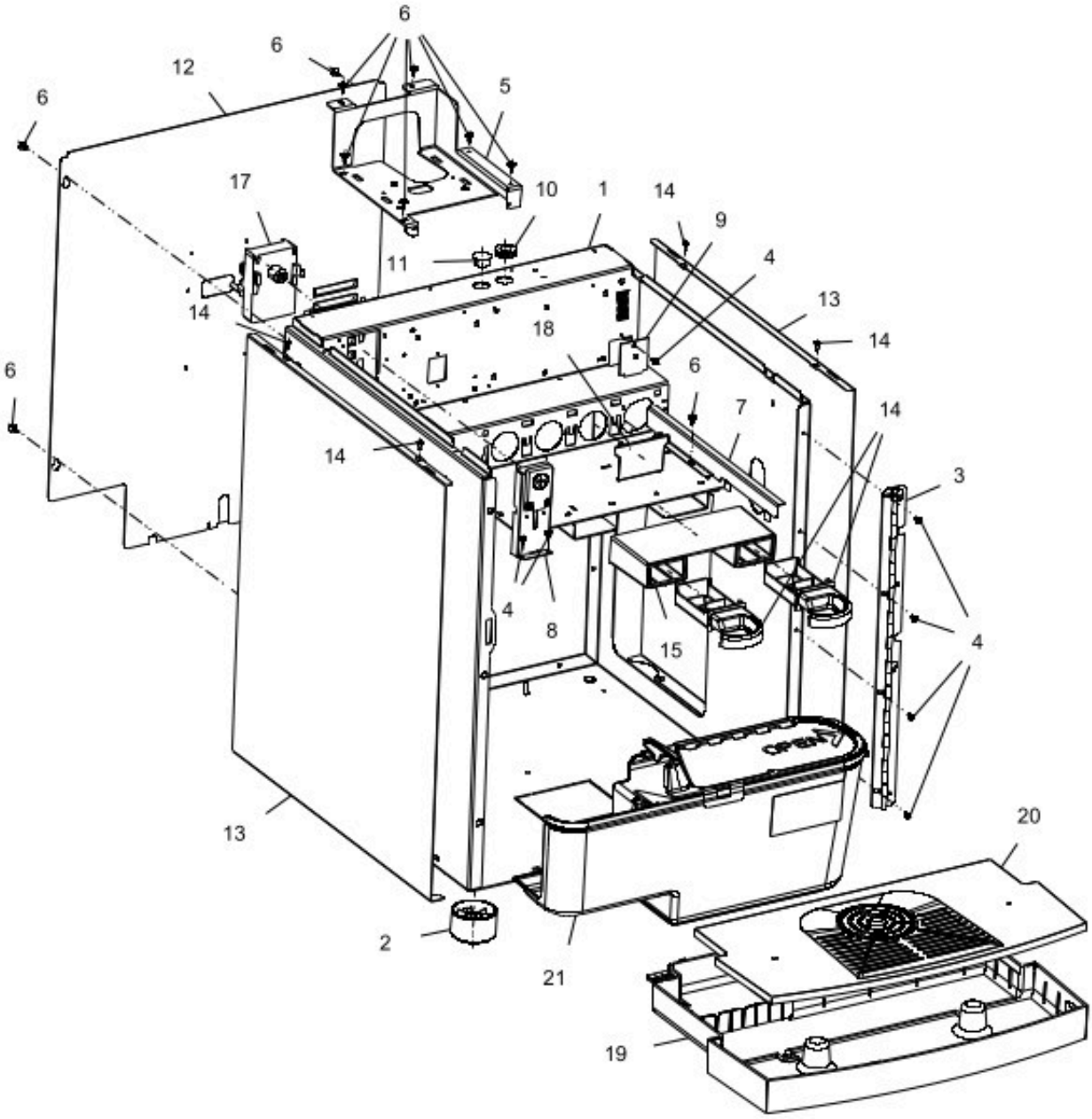

www.rheavendors.com tel: 0039 02 966 551 fax: 0039 02 96 55 086 email: rheavendors@rheavendors.com exclusive property of rheavendors group

cabinet		
Pos.	**Code**	**Description**
1	Z0012400147NA	CABINET
2	Z0010024111CL1	§ MACHINE FOOT D.50X29 RAL9005
3	Z001A122121	DOOR HINGE
4	VIT0002009	SCREW ST HEAD CAP M3.5X6.5
5	Z0010024190NA	GRINDER SUPPORT
6	VIT0002401	SCREW ST HEAD CAP M3.5X9.5
7	Z0010024187NA	WIRING SUPPORT (BLACK)
8	Z0010024162CL1	§ COFFEE BEANS SENSOR
9	Z0010024186NA	PRODUCTS SENSOR COVER BLACK
10	H00025008	CABLE GROMMET
11	GUA0011044	PLUG
12	Z0012400358NA	REAR CABINET PRO XS 08
13	Z0010024183NA	SIDE COVER SX-DX XS
14	VIT0000106	SCREW COUNT FLAT HEAD M4X8
15	Z0010027037	TRAP DRAWER
16	Z0010027022	TRAP DRAWER REMOVABLE
17	Z0090002113	MOTOR 24 DC 97 RPM
18	Z0010020029NA	GEARBOX MOTOR PLUG BLACK
19	Z0020039036CL	§ DRIP TRAY+SPRING BLACK
20	Z0020039035NA	DRIP TRAY GRID BLACK
21		See table COFFEE GROUNDS CONTAINER

www.rheavendors.com tel: 0039 02 966 551 fax: 0039 02 96 55 086 email: rheavendors@rheavendors.com exclusive property of rheavendors group

UPPER COVER

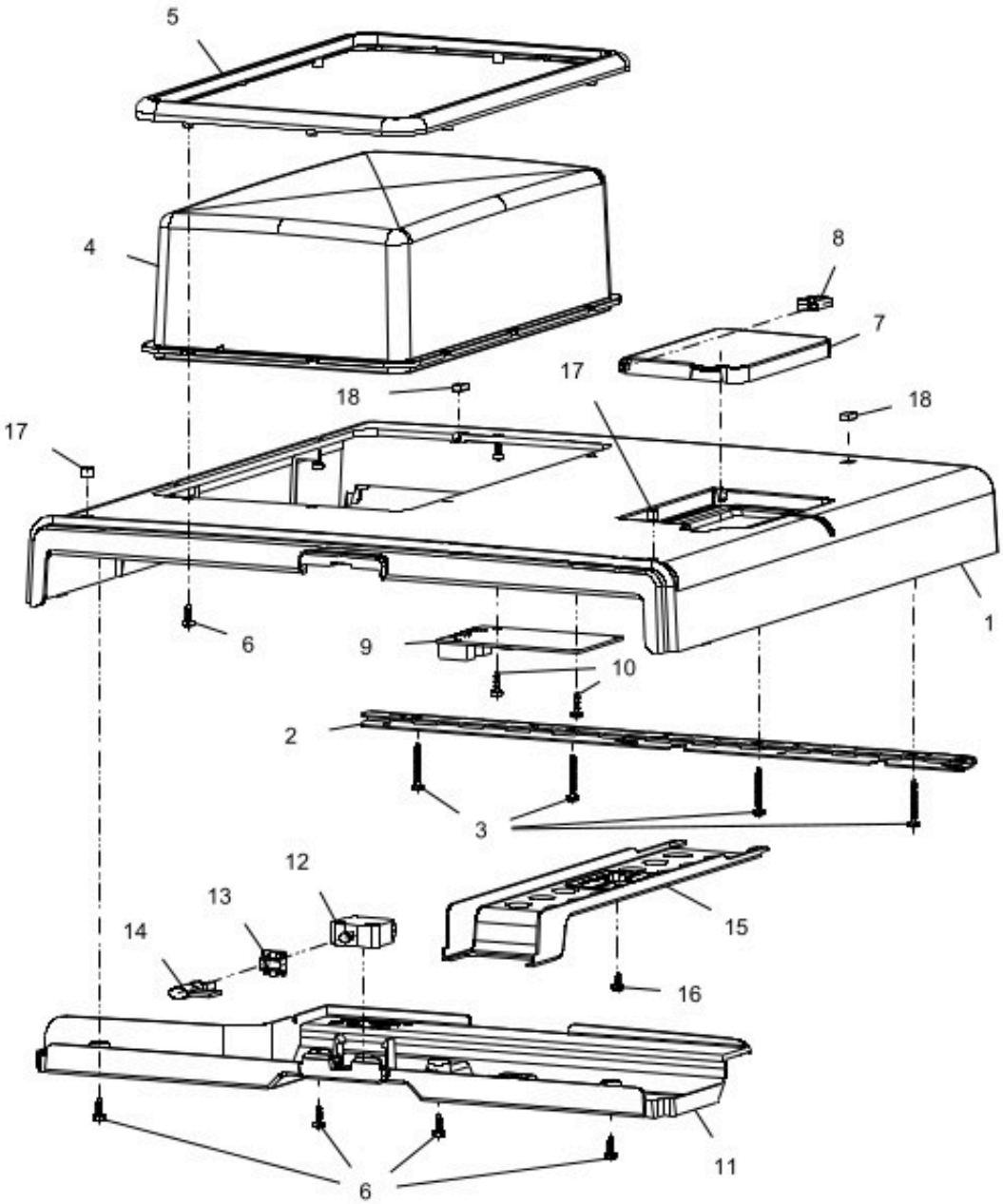

www.rheavendors.com tel: 0039 02 966 551 fax: 0039 02 96 55 086 email: rheavendors@rheavendors.com exclusive property of rheavendors group

UPPER COVER		
Pos.	**Code**	**Description**
1	Z0010024140NA	UPPER COVER RAL 9005
2	Z0010024012	HINGE D.5,5 L.390
3	VIT0002456	SCREW HEAD TAP M3.5X25
4	Z0230015255TR	COFFEE BEANS HOPPER COVER
5	Z0230015256NA	COFFEE BEANS HOPPER FRAME
6	VIT0002469	SCREW HEAD TAP M3.5X10
7	Z0010024118NA	INLET WATER LID XS08 RAL 9005
8	Z0020037124NA	PIN
9	SCH0006261	RFID CARD READER_1
10	VIT0002452	SCREW HEAD TAP M3.5X12
11	Z0010024114NA	UPPER COVER CLOSING BLACK
12	ELE0002019	SWITCH 16A 250V
13	Z0010028476	SAFETY INTERLOCK
14	Z0270011109IC	SERVICE KEY RAL2011
15	Z0010024119NA	CABLE COVER
16	VIT0002475	SCREW HEAD TAP M3.5X8
17	Z0010027344	RING PLUG
18	Z0010027343	PLUG SUPPORT COVER

www.rheavendors.com tel: 0039 02 966 551 fax: 0039 02 96 55 086 email: rheavendors@rheavendors.com exclusive property of rheavendors group

rear cabinet

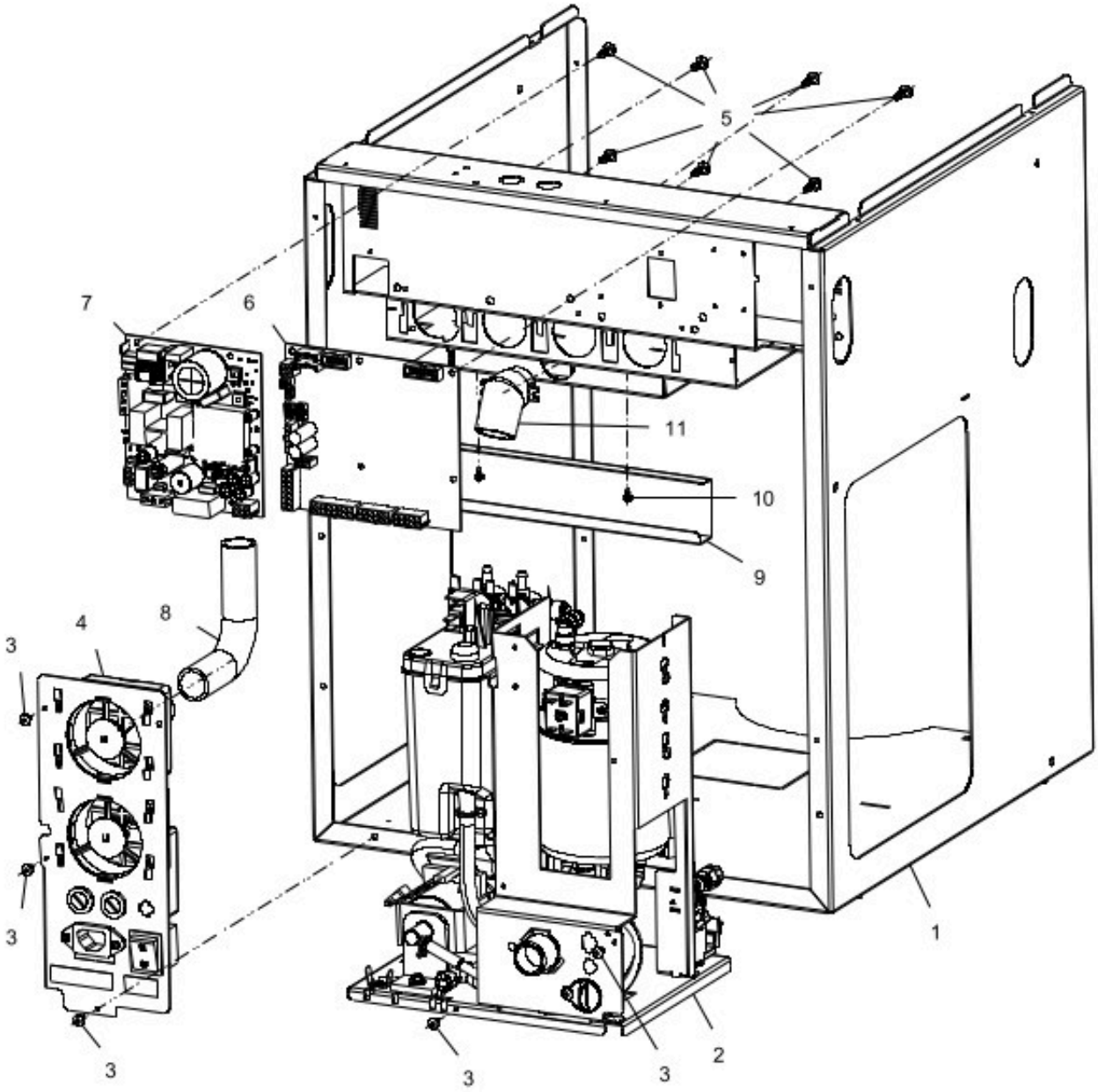

www.rheavendors.com tel: 0039 02 966 551 fax: 0039 02 96 55 086 email: rheavendors@rheavendors.com exclusive property of rheavendors group

rear cabinet		
Pos.	**Code**	**Description**
1	Z0012400147NA	CABINET
2		See table HYDRAULIC CIRCUIT
3	VIT0000021	SCREW HEAD TAP CAP M4X6
4/a		See table control panel
4/b		See table CONTROL PANEL 120V
5	ELE0062020	BOARD SUPPORT
6	BRD03009R-02	§CARRIER BOARD+SOM TT
7/a	BRD05003	POWER BOARD TT 220V
7/b	BRD05004A-01	POWER BOARD TT 110V
8	TEOL000001CL1	EXTRACTOR TUBE D.20 170MM
9	Z0010024161NA	WIRING SUPPORT (BLACK)
10	VIT0002009	SCREW ST HEAD CAP M3.5X6.5
11	Z0010027043NA	EXTRACTOR TUBE BLACK

www.rheavendors.com tel: 0039 02 966 551 fax: 0039 02 96 55 086 email: rheavendors@rheavendors.com exclusive property of rheavendors group

DOOR

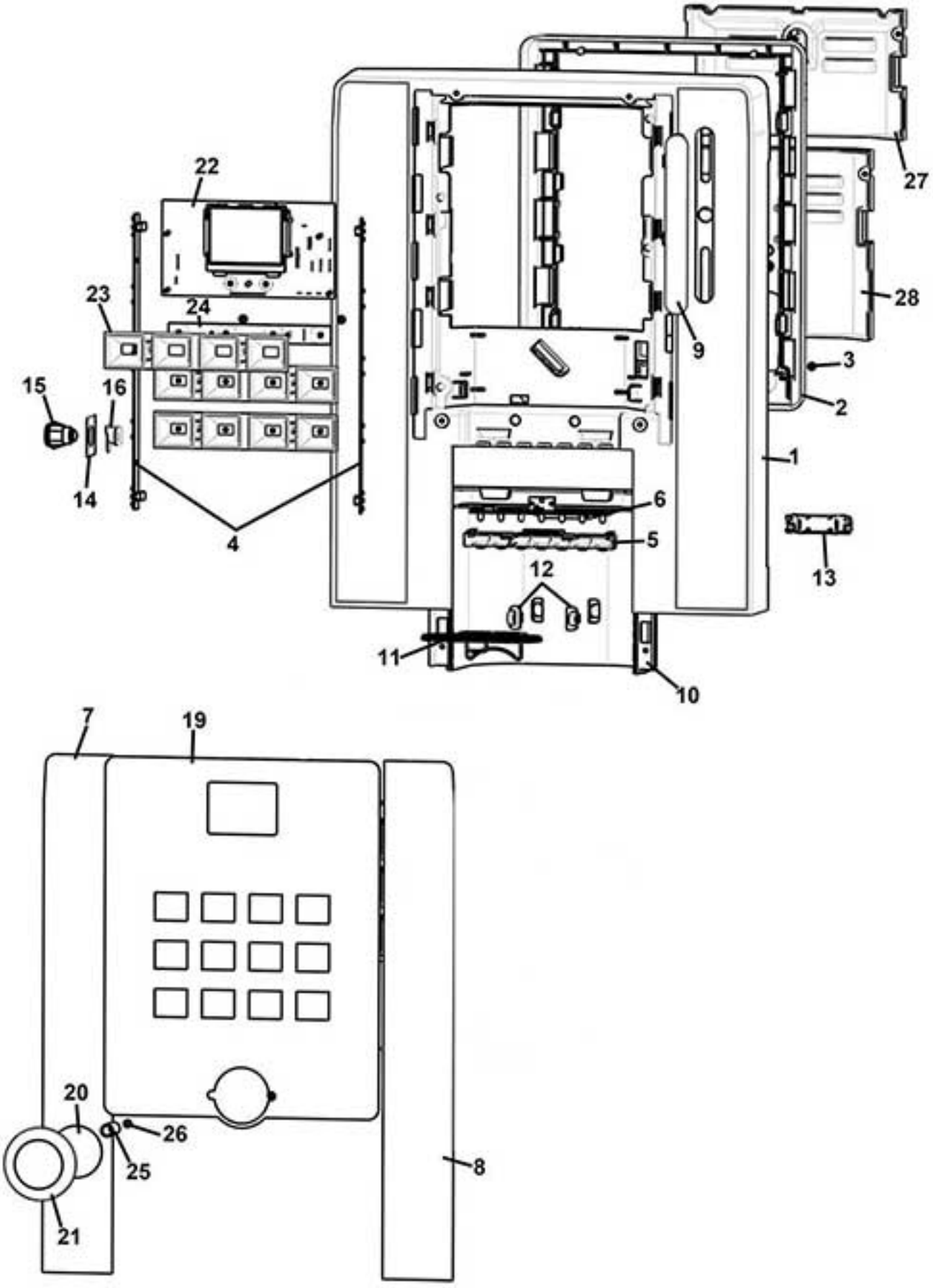

www.rheavendors.com tel: 0039 02 966 551 fax: 0039 02 96 55 086 email: rheavendors@rheavendors.com exclusive property of rheavendors group

DOOR		
Pos.	**Code**	**Description**
1	Z0020039131NA	DOOR (RAL9005)
2	Z0020039132NA	DOOR FRAME (BLACK)
3	VIT0002466	SCREW HEAD TAP M3.5X16
4	SCH0008120	LIGHTING BOARD
5	Z0020039078TR	CUP STAT.ENLIGHTENMENT SUPPORT
6	SCH0008144	LIGHTING CUP STATION BOARD
7/a	Z0020039043	LEFT PANEL RAL9005
7/b	1030000075	SIDE PANEL LEFT
8/a	Z0020039049	RIGHT PANEL W/O LOGO RAL9005
8/b	1030000074	SIDE PANEL RIGHT
9	Z0020039537NA	COIN ENTRY BLANK.PLATE
10	Z0020039071NA	CUPS STATION FRAME BLACK
11	Z0020039072NA-02	CUP SUPPORT BLACK
12	Z0020039073NA	CUP SUPPORT PIN BLACK
13	Z0020039087-03IC	CUP HOLDER BRACKET
14	Z0020037014	LOCK PLATE
15	SER0000024/1	LOCK INOX RVI MM20 C.3374
16	Z0020037015	LOCK PLATE
19	1030000160R	§PLEX+CAP.KEYPD+BLACK PANEL
20	1030000297	BL LOGO
21	Z0020039084CL	§ DOOR LOGO FRAME CROMO
22	SCH0009983-01	3,5" DISPLAY BOARD
23	Z0020037675AB	LIGHT BUTTONS GUIDE
24	SCH0010060	KEYPAD LIGHTING BOARD
25	Z0020039137	SPACER
26	VIT0002461	SCREW HEAD TAP M4.2X26
27	Z0020039134IC	UPPER DOOR RAL2011
28	Z0020039076-01NA	LOWER INTER. DOOR COVER BLACK

www.rheavendors.com tel: 0039 02 966 551 fax: 0039 02 96 55 086 email: rheavendors@rheavendors.com exclusive property of rheavendors group

COFFEE GROUNDS CONTAINER

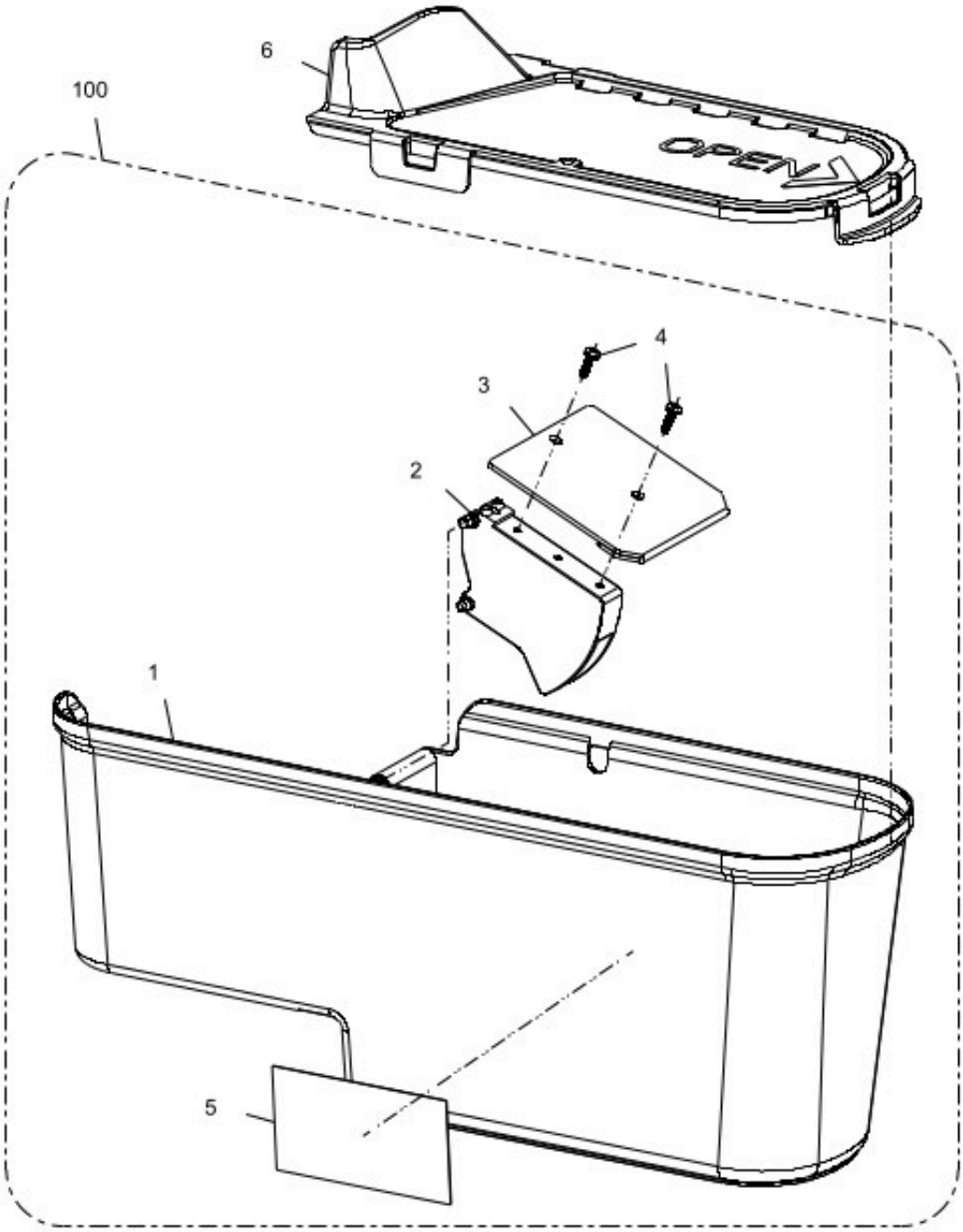

www.rheavendors.com tel: 0039 02 966 551 fax: 0039 02 96 55 086 email: rheavendors@rheavendors.com exclusive property of rheavendors group

COFFEE GROUNDS CONTAINER		
Pos.	**Code**	**Description**
1	Z0010024154	GROUNDS CONTAINER
2	Z0010024164-02	GROUNDS EJECTOR
3	Z0010024165	GROUNDS EJECTOR PLATE
4	VIT0002027	SCREW ST HEAD CAP M3.5X13
5	1010100214	STICKER GROUND EJECTOR
6	Z001A128000NA-03	WASTE PADS CONTAINERLID
100	Z0010024154CL	§GROUNDS HOPPER

www.rheavendors.com tel: 0039 02 966 551 fax: 0039 02 96 55 086 email: rheavendors@rheavendors.com exclusive property of rheavendors group

mixer plan (espresso version)

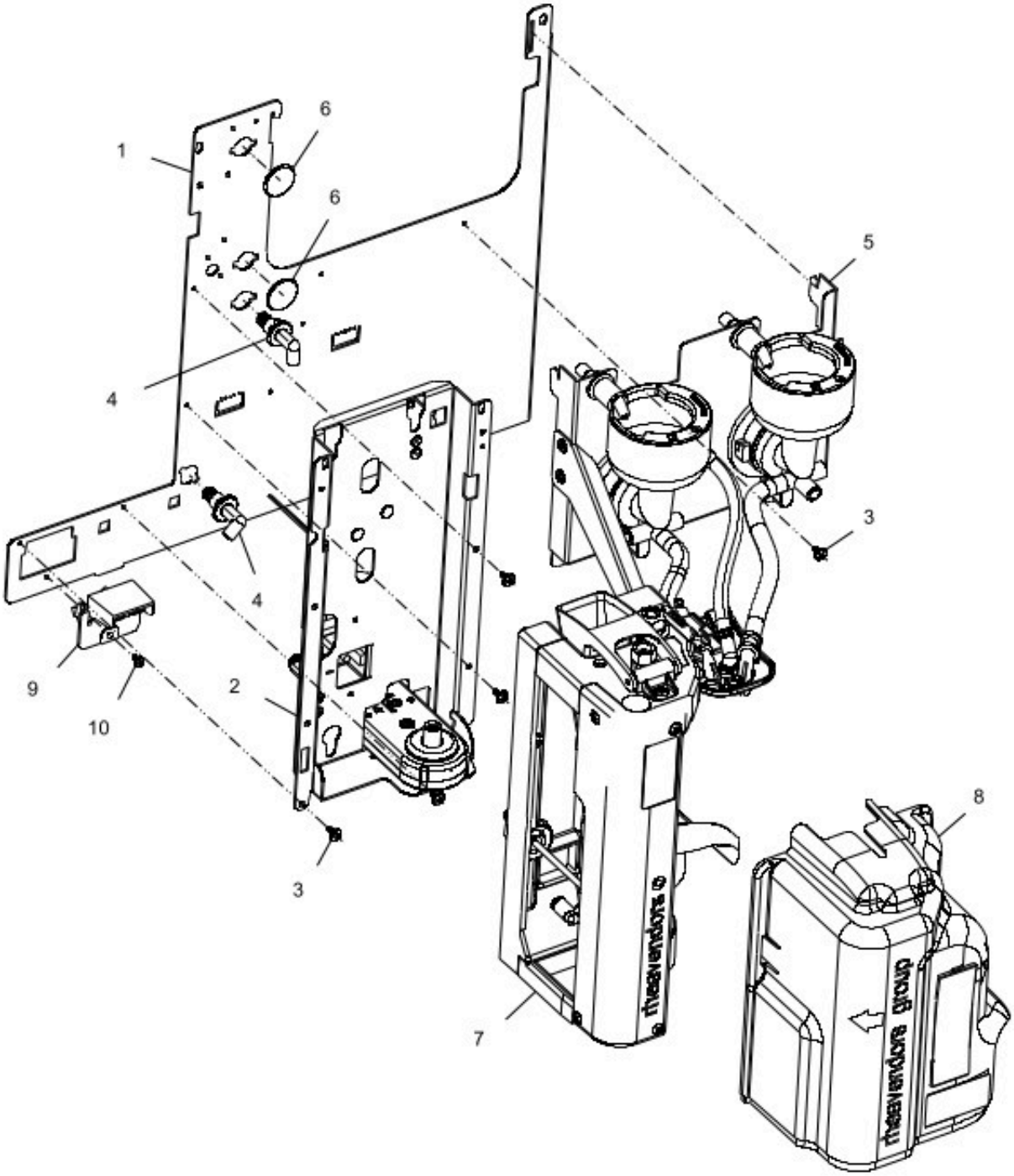

www.rheavendors.com tel: 0039 02 966 551 fax: 0039 02 96 55 086 email: rheavendors@rheavendors.com exclusive property of rheavendors group

mixer plan (espresso version)		
Pos.	**Code**	**Description**
1	Z0262300049NA	Grande-F60 EXPRES.MIXER PLATE
2		See table PRO BREWER SUPPORT+MOTOR
3	VIT0002401	SCREW ST HEAD CAP M3.5X9.5
4	Z0080100084	90° CONNECTOR
5		See table 2 MIXERS SUPPORT ASSEMBLY
6	Z0080100035NA	CONNECTOR PLUG BLACK
7/a		See table PROFESSIONAL BREWER GROUP D.45
7/b		See table PROFESSIONAL BREWER GROUP D.36
8	Z0250014007CL1	§ VARIFLEX BREWER COVER-TT
9	Z0010020836CL	§DRIP TRAY SENSOR
10	VIT0002009	SCREW ST HEAD CAP M3.5X6.5

www.rheavendors.com tel: 0039 02 966 551 fax: 0039 02 96 55 086 email: rheavendors@rheavendors.com exclusive property of rheavendors group

HYDRAULIC CIRCUIT

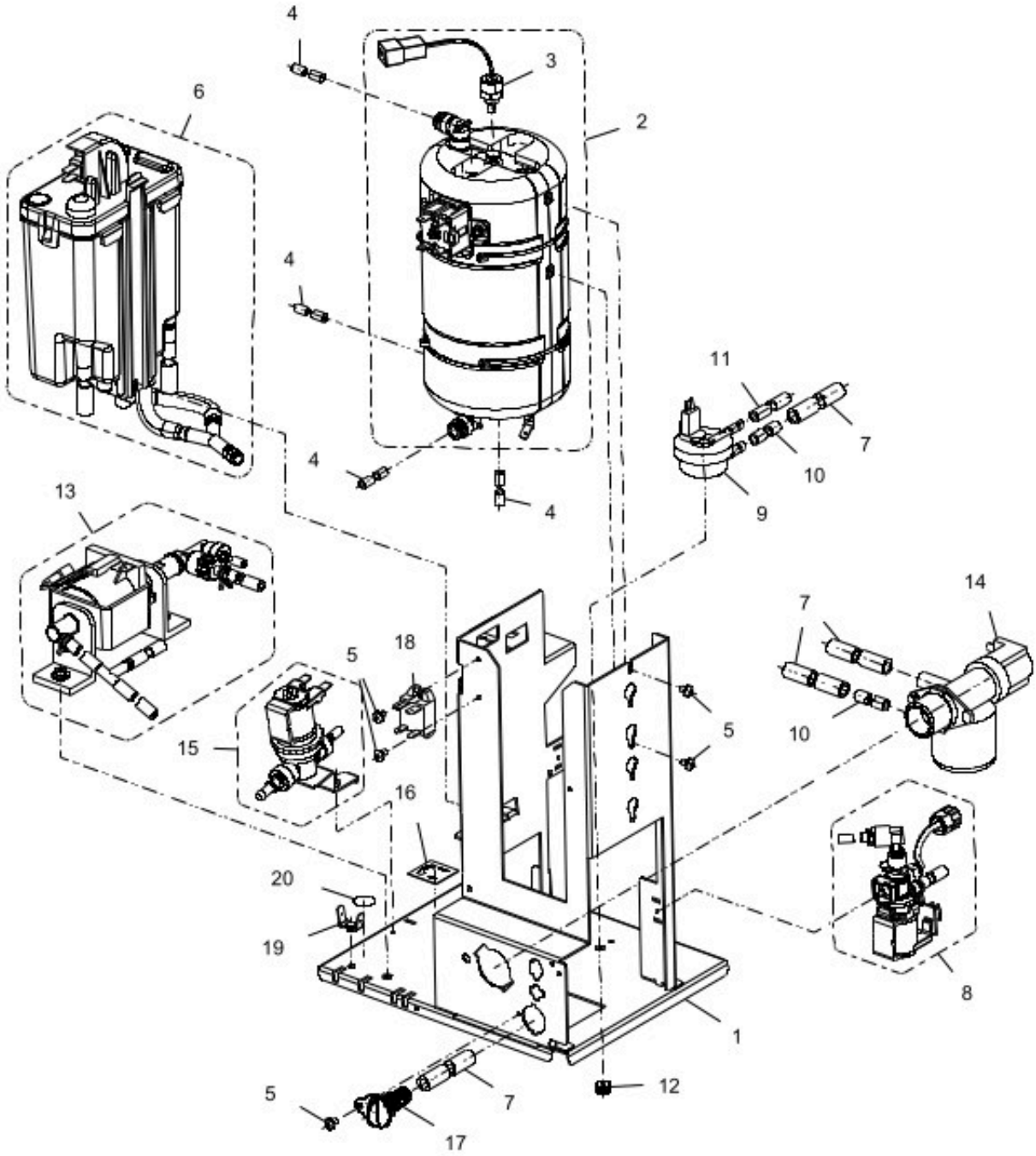

www.rheavendors.com tel: 0039 02 966 551 fax: 0039 02 96 55 086 email: rheavendors@rheavendors.com exclusive property of rheavendors group

HYDRAULIC CIRCUIT		
Pos.	**Code**	**Description**
1	Z0262300051	HYDRAULIC COMPONENTS SUPPORT
2	Z0600019852-01	§ BOILER
3	ELE0000991	TEMPERATURE PROBE
4	TTEF04/06T	PTFE PIPE 4X6
5	VIT0000021	SCREW HEAD TAP CAP M4X6
6		See table water inlet panel
7/a	TSIL07/11T-10	SILICON HOSE 7X11 MT.10
7/b	TSIL07/11T-50	SILICON HOSE 7X11 MT.50
8		See table COFFEE VALVE
9	Z0110007003	VOLUMETRIC COUNTER
10/a	TSIL04/06T-10	SILICON HOSE 4X6 MT.10
10/b	TSIL04/06T-50	SILICON HOSE 4X6 MT.50
11/a	TSIL05/08T-10	SILICON HOSE 5X8 MT.10
11/b	TSIL05/08T-50	SILICON HOSE 5X8 MT.50
12	GUA0010551	ELECTRICAL GROMMET
13		See table COFFEE PUMP
14	Z0110001058	WATER INLET VALVE 24V DC
15		See table BOILER DISCHARGE VALVE
16	1032300003	INDICATION LABEL
17	Z0600016455	H2O OUTLET PLUG
18	ELE0001021	RELAY
19	ELE0060520	GROUND PIN
20	1010100111	GROUND WIRING LABEL

www.rheavendors.com tel: 0039 02 966 551 fax: 0039 02 96 55 086 email: rheavendors@rheavendors.com exclusive property of rheavendors group

BOILER DISCHARGE VALVE

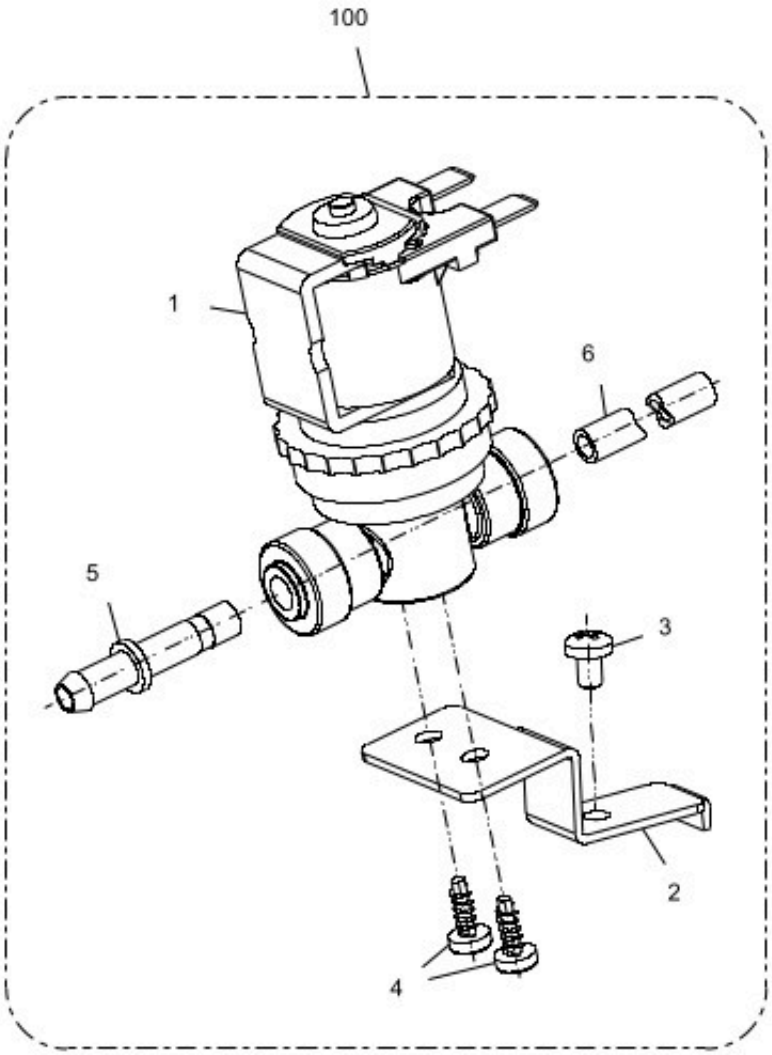

www.rheavendors.com tel: 0039 02 966 551 fax: 0039 02 96 55 086 email: rheavendors@rheavendors.com exclusive property of rheavendors group

BOILER DISCHARGE VALVE		
Pos.	**Code**	**Description**
1	Z011B185022	VALVE 2 WAY 24DC
2	Z0602400008	DRAIN VALVE BRACKET
3	VIT0000021	SCREW HEAD TAP CAP M4X6
4	VIT0002469	SCREW HEAD TAP M3.5X10
5	Z0100001237	STRAIGHT STEM CONNECTOR
6	TTEF04/06T	PTFE PIPE 4X6
100	Z011B185022R1	§ DRAIN VALVE

www.rheavendors.com tel: 0039 02 966 551 fax: 0039 02 96 55 086 email: rheavendors@rheavendors.com exclusive property of rheavendors group

SOLUBLES VALVES

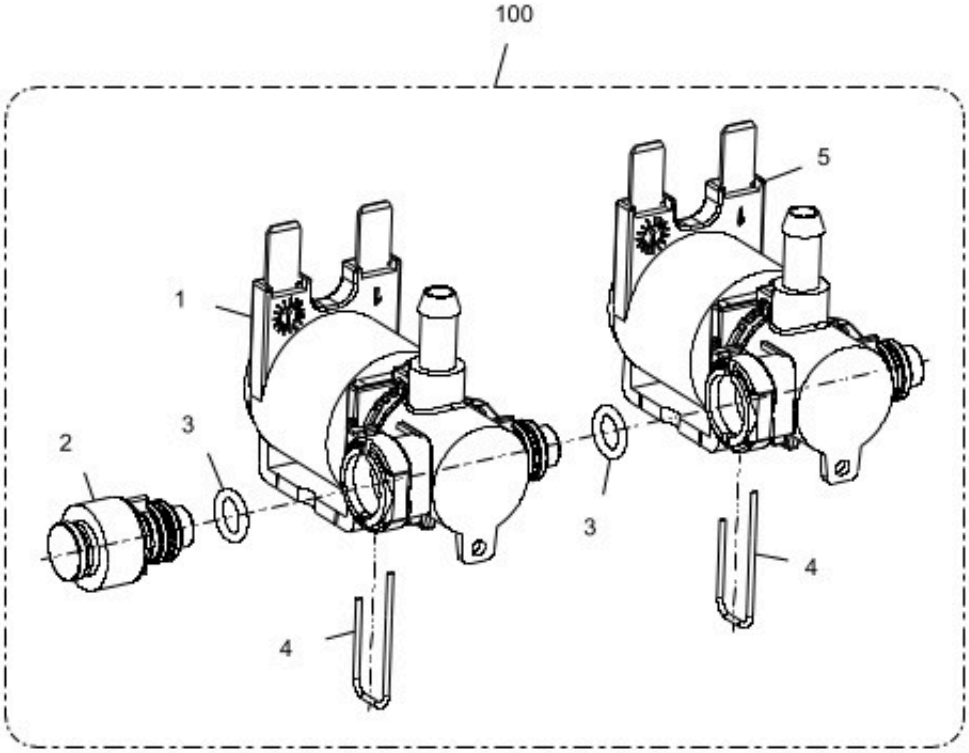

www.rheavendors.com tel: 0039 02 966 551 fax: 0039 02 96 55 086 email: rheavendors@rheavendors.com exclusive property of rheavendors group

SOLUBLES VALVES		
Pos.	**Code**	**Description**
1	Z0112300017	TU EV
2	Z0112300018	TU INPUT CONNECTION
3	GUA2300006	O-RING TU
4	Z0112300015	FORK ASSEMBLY TU
5	Z0112300016	EV TU PLUGGED RIGHT
100	Z0112400011CL	§ BLOCK 2 EV TU

www.rheavendors.com tel: 0039 02 966 551 fax: 0039 02 96 55 086 email: rheavendors@rheavendors.com exclusive property of rheavendors group

COFFEE VALVE

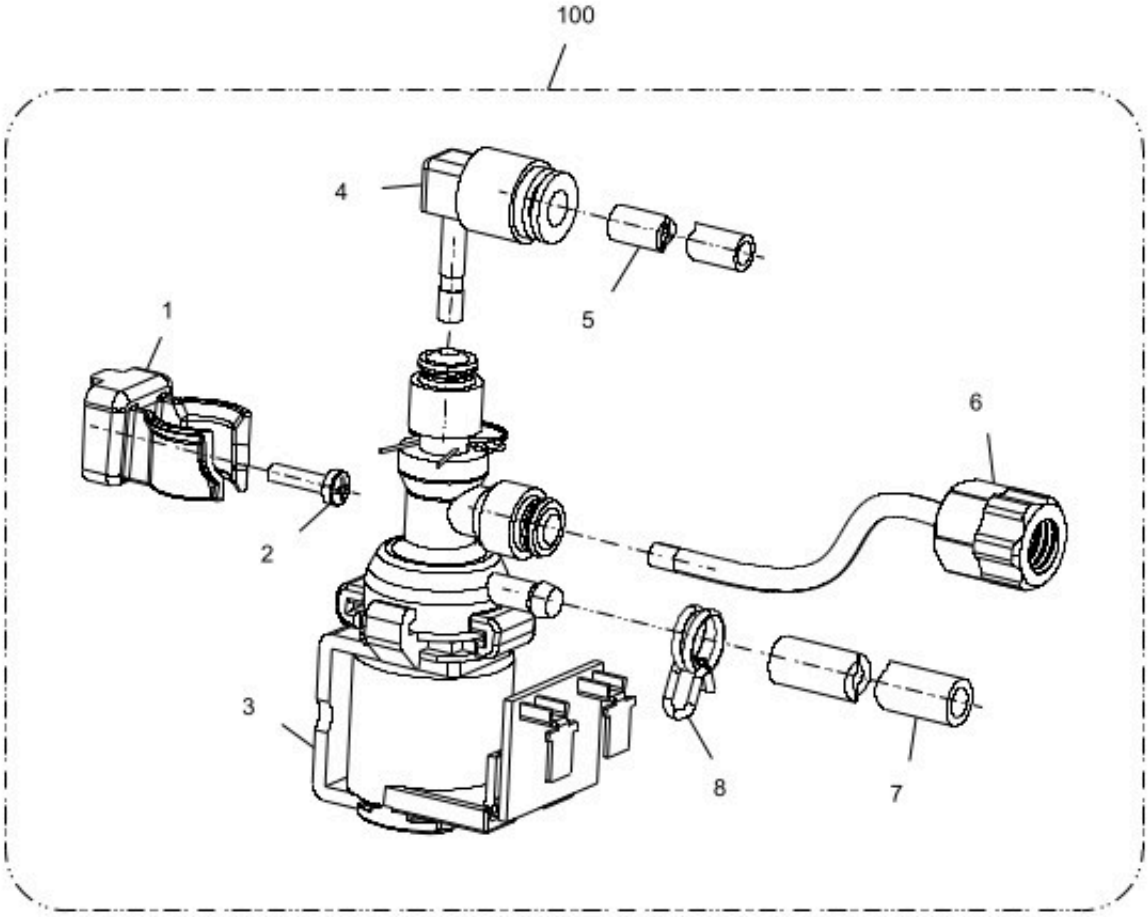

www.rheavendors.com tel: 0039 02 966 551 fax: 0039 02 96 55 086 email: rheavendors@rheavendors.com exclusive property of rheavendors group

COFFEE VALVE		
Pos.	**Code**	**Description**
1	Z060B185111NA	3 WAYS SUPPORT
2	VIT0000005	SCREW HEAD TAP CAP M3X12
3	Z011B185023	VALVE 3/2 24V+BOARD PWM
4	Z0100001238	ELBOW CONNECTOR
5	TTEF04/06T	PTFE PIPE 4X6
6	Z0250014086R9	§WATER INLET TUBE 0,125 mt
7/a	TSIL05/08T-10	SILICON HOSE 5X8 MT.10
7/b	TSIL05/08T-50	SILICON HOSE 5X8 MT.50
8	FASC000111	TUBE FIXING CLIP
100	Z011B185023R	§ EV COFEE

www.rheavendors.com tel: 0039 02 966 551 fax: 0039 02 96 55 086 email: rheavendors@rheavendors.com exclusive property of rheavendors group

COFFEE PUMP

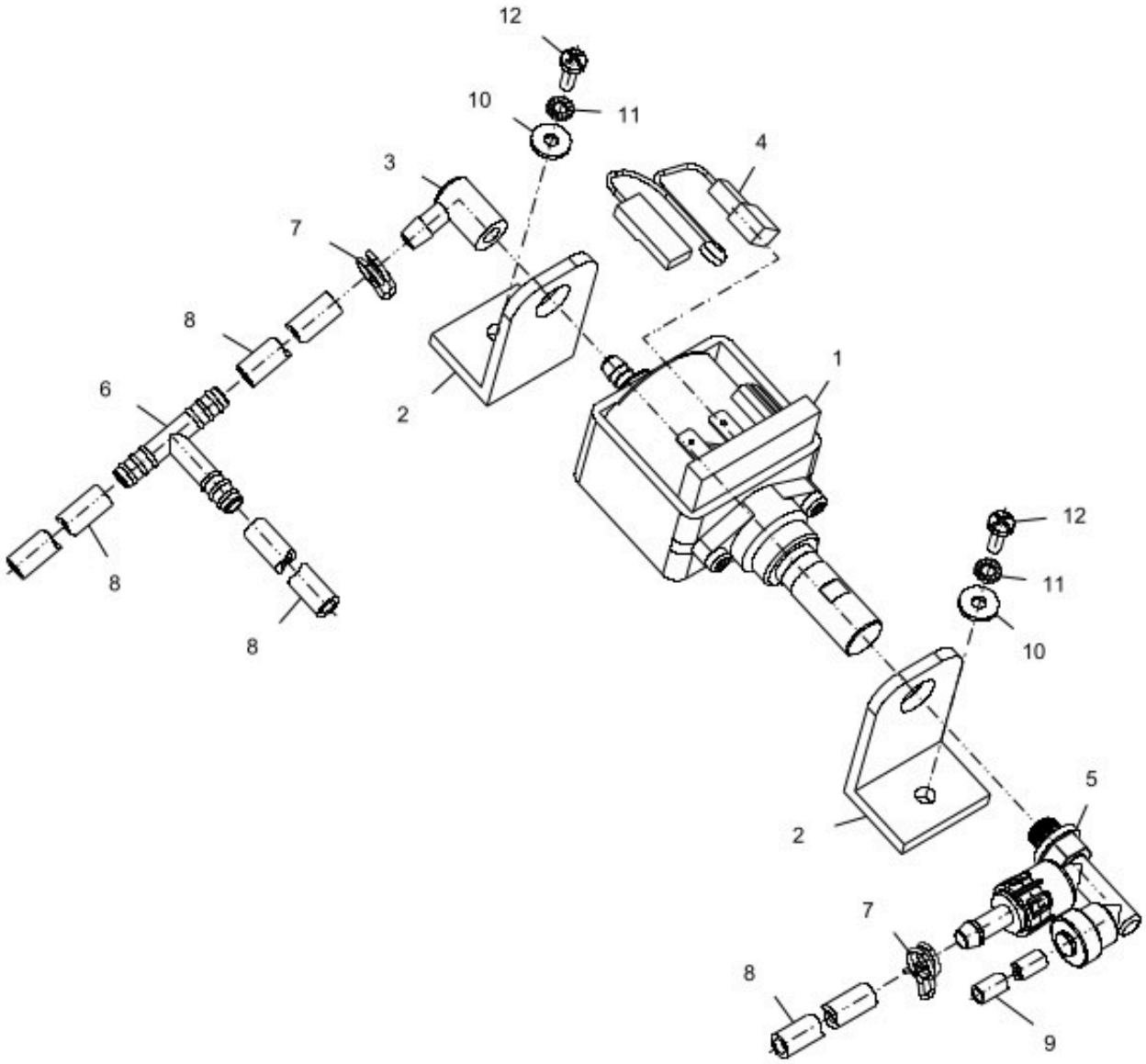

www.rheavendors.com tel: 0039 02 966 551 fax: 0039 02 96 55 086 email: rheavendors@rheavendors.com exclusive property of rheavendors group

COFFEE PUMP		
Pos.	**Code**	**Description**
1/a	Z0110004065	PUMP PLUS PGØ7 230V-50HZ
1/b	Z0112400017	PUMP PLUS PGØ7 120V 60HZ
1/c	Z0112400018	PUMP PLUS 100V 50/60HZ
2	Z0110004022	SUPPORT
3	Z0110004023	CONNECTOR
4	ELE0000915	PUMP THERMOPROTECTOR
5	Z0112300012	VALVE 11BAR
6	Z0100003022	T CONNECTOR 461 TS UL
7	FASC000105	CLAMP
8/a	TSIL05/08T-10	SILICON HOSE 5X8 MT.10
8/b	TSIL05/08T-50	SILICON HOSE 5X8 MT.50
9	TTEF04/06T	PTFE PIPE 4X6
10	VIT0003301	WASHER 4,3X12X1,5
11	VIT0003103	SPRING WASHER 4,3
12	VIT0000013	SCREW HEAD TAP CAP M4X12

www.rheavendors.com tel: 0039 02 966 551 fax: 0039 02 96 55 086 email: rheavendors@rheavendors.com exclusive property of rheavendors group

control panel

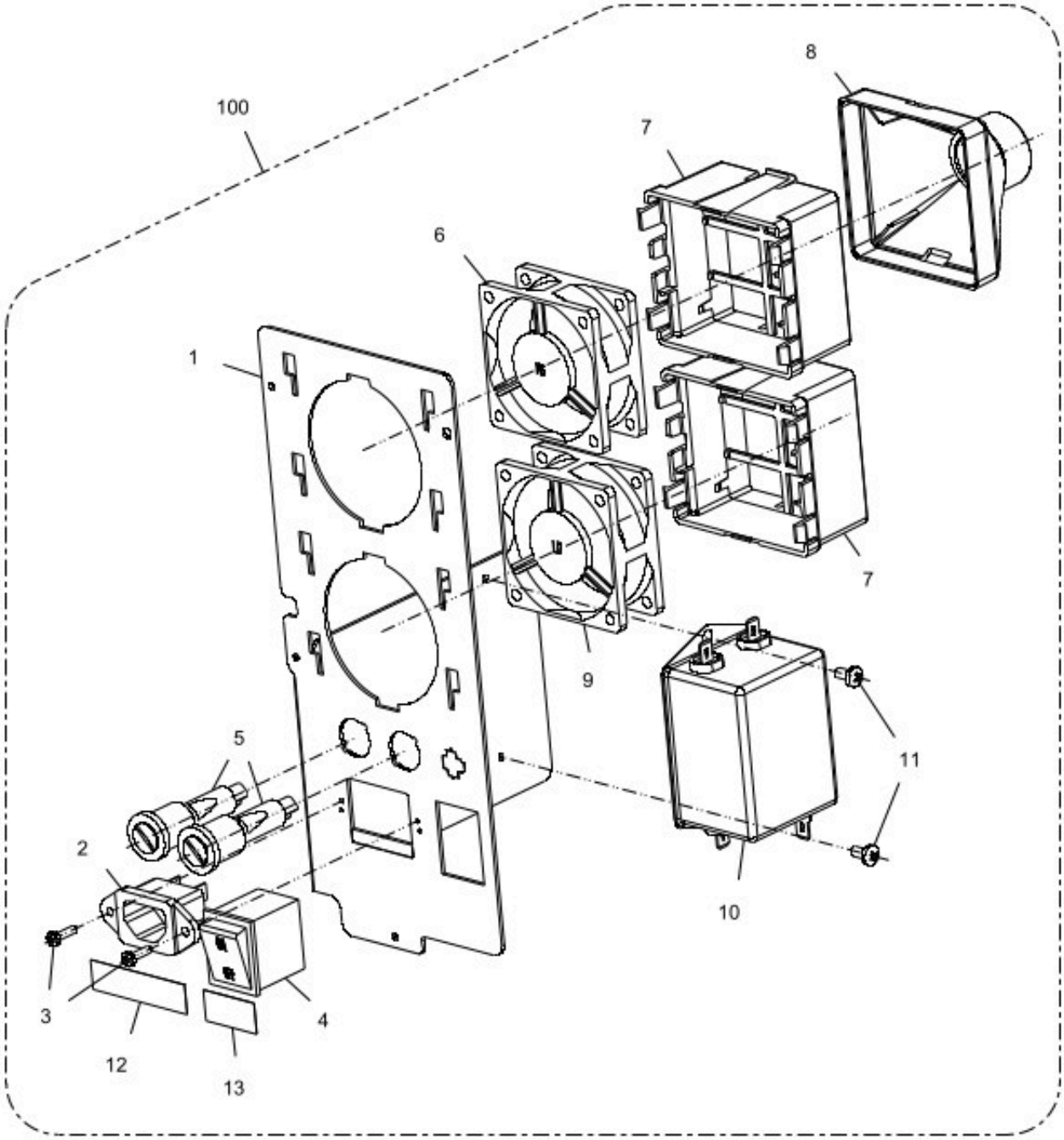

www.rheavendors.com tel: 0039 02 966 551 fax: 0039 02 96 55 086 email: rheavendors@rheavendors.com exclusive property of rheavendors group

control panel		
Pos.	**Code**	**Description**
1	Z0132400025	SOCKET SUPPORT + FANS
2	ELE0002310	MAINS SOCKET IEC 250V 15A
3	VIT0001010	M 3x12 TCB SCREW
4	ELE0002014	BIPOLAR SWITCH 15A 250V
5	ELE0003508CL	FUSE HOLDER+FUSE 12A
6	ELE0000461	FAN 24V DC-HIGH SPEED
7	Z0010027064	FAN SUPPORT
8	Z0010027065	FAN CONNECTOR
9	ELE0000462	FAN 24V DC-LOW SPEED
10	ELE0009066	NOISE FILTER 16A
11	VIT0000032	SCREW HEAD TAP CAP M4X8
12	1010100124	FUSE 12A LABEL
13	1010100149	230V LABEL
100	Z0132400032CL	§ELECTRIC PANEL 230V

www.rheavendors.com tel: 0039 02 966 551 fax: 0039 02 96 55 086 email: rheavendors@rheavendors.com exclusive property of rheavendors group

CONTROL PANEL 120V

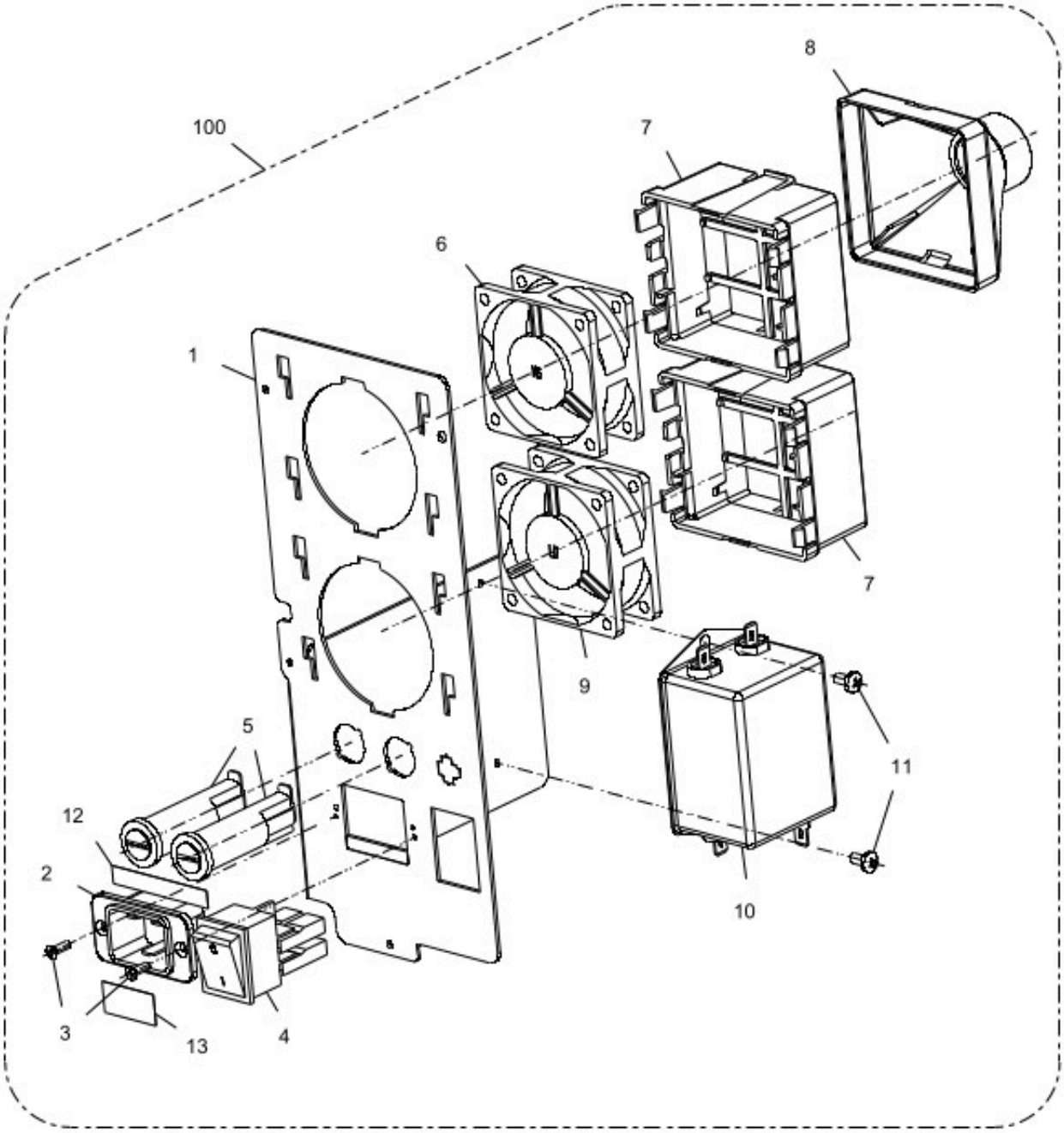

www.rheavendors.com tel: 0039 02 966 551 fax: 0039 02 96 55 086 email: rheavendors@rheavendors.com exclusive property of rheavendors group

CONTROL PANEL 120V		
Pos.	**Code**	**Description**
1	Z0132400025	SOCKET SUPPORT + FANS
2	ELE0002350	MAINS SOCKET 16A
3	VIT0001010	M 3x12 TCB SCREW
4	ELE0002014	BIPOLAR SWITCH 15A 250V
5	ELE0003509CL2	FUSE HOLDER+FUSE 15A UL
6	ELE0000461	FAN 24V DC-HIGH SPEED
7	Z0010027064	FAN SUPPORT
8	Z0010027065	FAN CONNECTOR
9	ELE0000462	FAN 24V DC-LOW SPEED
10	ELE0009066	NOISE FILTER 16A
11	VIT0000032	SCREW HEAD TAP CAP M4X8
12	1010100213	FUSE LABEL 15A (2 FUS)
13	1010100148	TENSION 120V LABEL
100	Z0132400033CL	ELECTRIC PANEL 120V BOLL.

www.rheavendors.com tel: 0039 02 966 551 fax: 0039 02 96 55 086 email: rheavendors@rheavendors.com exclusive property of rheavendors group

2 MIXERS SUPPORT ASSEMBLY

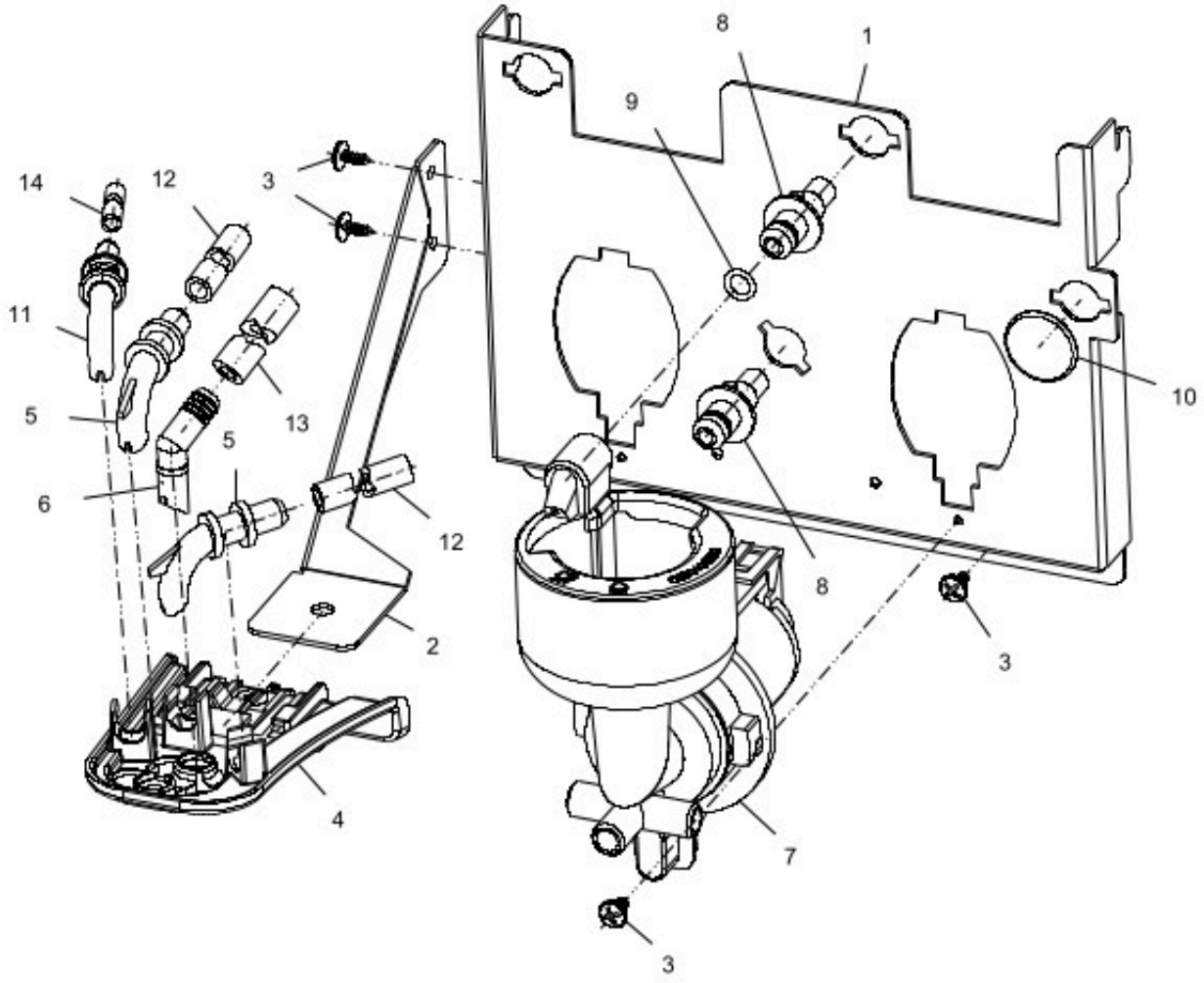

www.rheavendors.com tel: 0039 02 966 551 fax: 0039 02 96 55 086 email: rheavendors@rheavendors.com exclusive property of rheavendors group

2 MIXERS SUPPORT ASSEMBLY		
Pos.	**Code**	**Description**
1	Z026A145009NA	MIXER SUPPORT 60 ESPRESSO BE
2	Z0080200014NA	HOSES SUPPORT
3	VIT0002401	SCREW ST HEAD CAP M3.5X9.5
4	Z0020039552	NOZZLES HOLDER (BLACK)
5	Z0010020052	PRODUCT NOZZLE
6	Z0020039533	SPOUT DELIVERY 30° D.6
7		See table mixer
8	Z0080100043	MIXER CONNECTOR BLACK
9	GUA0000085	OR 106 RED SILICONE A70
10	Z0080100035NA	CONNECTOR PLUG BLACK
11	Z0020039539	SPOUT DELIVERY D.4
12/a	TSIL06/09TC-10	SILICON HOSE 5,6X8,8 MT.10
12/b	TSIL06/09TC-50	SILICON HOSE 5,6X8,8 MT.50
13/a	TSIL06/11T-10	SILICON HOSE 6X11 MT.10
13/b	TSIL06/11T-50	SILICON HOSE 6X11 MT.50
14/a	TSIL04/06T-10	SILICON HOSE 4X6 MT.10
14/b	TSIL04/06T-50	SILICON HOSE 4X6 MT.50

www.rheavendors.com tel: 0039 02 966 551 fax: 0039 02 96 55 086 email: rheavendors@rheavendors.com exclusive property of rheavendors group

mixer

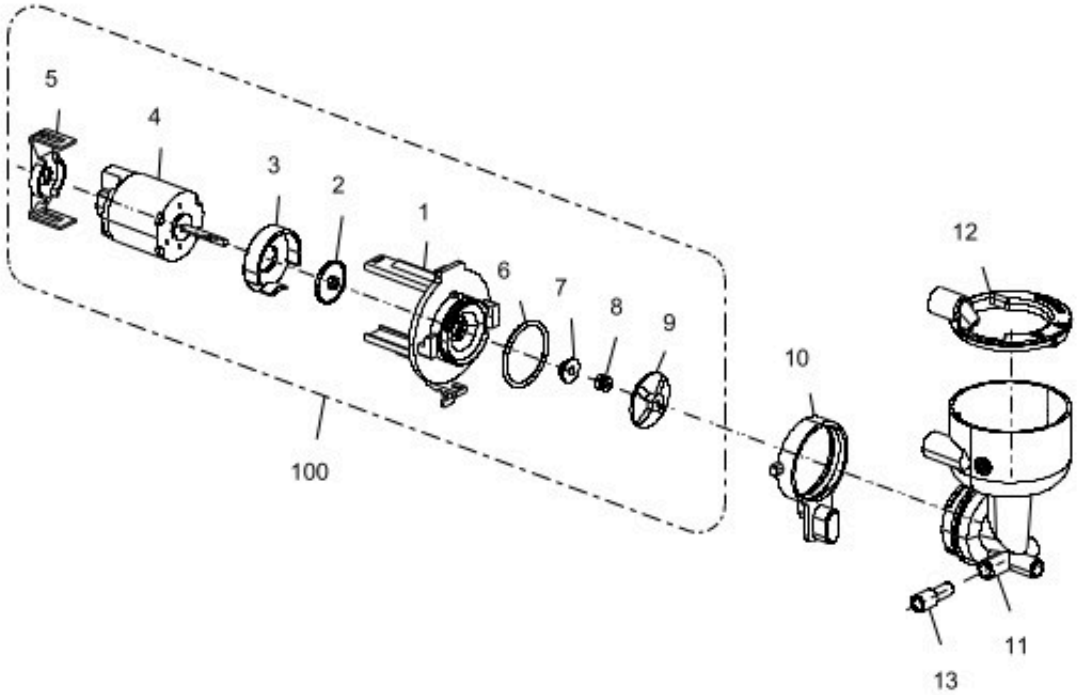

www.rheavendors.com tel: 0039 02 966 551 fax: 0039 02 96 55 086 email: rheavendors@rheavendors.com exclusive property of rheavendors group

mixer		
Pos.	**Code**	**Description**
1	Z0080100005	MOTOR MIXER BASE
2	Z0080100024	MIXER FAN
3	Z0080100023IC	MIXER COVER RAL2011
4	Z0090003023	MIXER MOTOR 24V DC SHAFT D.4
5	Z0080100009IC	MIXER MOTOR SUPPORT RAL2011
6	GUA0000084	OR 3131 RED SILICONE A60
7	Z0080100015	MIXER BUSH
8	Z0080100101	MIXER SHAFT GASKET
9	Z0080100011	MIXER FAN
10	Z0080100006IC	LOCK RING RAL2011
11/a	Z0080200110L	MIXING BOWL L.W/H20 BREAKER
11/b	Z0080200112C	MIXING BOWL F.W/H20 BREAKER
12	Z0080100080	MIXER RING W/PIPE X2,5 GREY
13	Z0080100095	TUBE REDUCER D.4
100	Z0080100001R	§ MIXER BOWL BASE+MOTOR

www.rheavendors.com tel: 0039 02 966 551 fax: 0039 02 96 55 086 email: rheavendors@rheavendors.com exclusive property of rheavendors group

water inlet panel

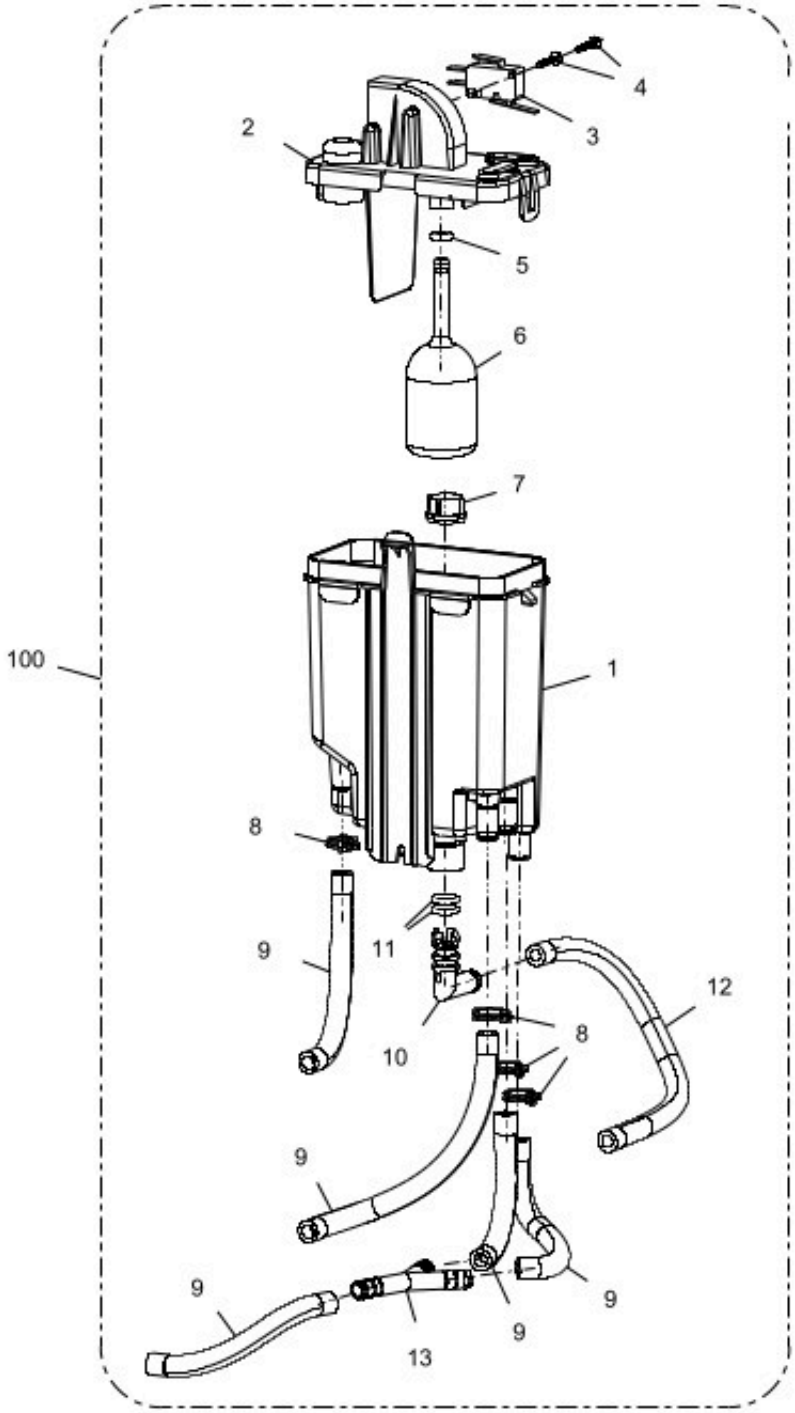

www.rheavendors.com tel: 0039 02 966 551 fax: 0039 02 96 55 086 email: rheavendors@rheavendors.com exclusive property of rheavendors group

water inlet panel		
Pos.	**Code**	**Description**
1	Z0800013041	AIR BREAK TANK
2	Z0800013043	AIR BREAK COVER
3	ELE0001514	MICROSWITCH 3A 125-250VA
4	VIT0002013	SCREW ST HEAD CAP M2.9X19
5	GUA0000082	SILICON GASKET D.6
6	Z0800013046	AIR BREAK WASTE FLOAT
7	Z0110020007	PLASTIC FILTER DIAM. 20
8	FASC000109	CLAMP
9/a	TSIL07/11T-10	SILICON HOSE 7X11 MT.10
9/b	TSIL07/11T-50	SILICON HOSE 7X11 MT.50
10	Z0800009211	ELBOW CONNECTOR
11	GUA0000043	OR 109 NBR AL 75 BLACK
12/a	TSIL06/11T-10	SILICON HOSE 6X11 MT.10
12/b	TSIL06/11T-50	SILICON HOSE 6X11 MT.50
13	Z0100001065	CONNECTOR "Y"
100	Z0802400000CL	§PLUMBED AIR BREAK

www.rheavendors.com tel: 0039 02 966 551 fax: 0039 02 96 55 086 email: rheavendors@rheavendors.com exclusive property of rheavendors group

GRINDER

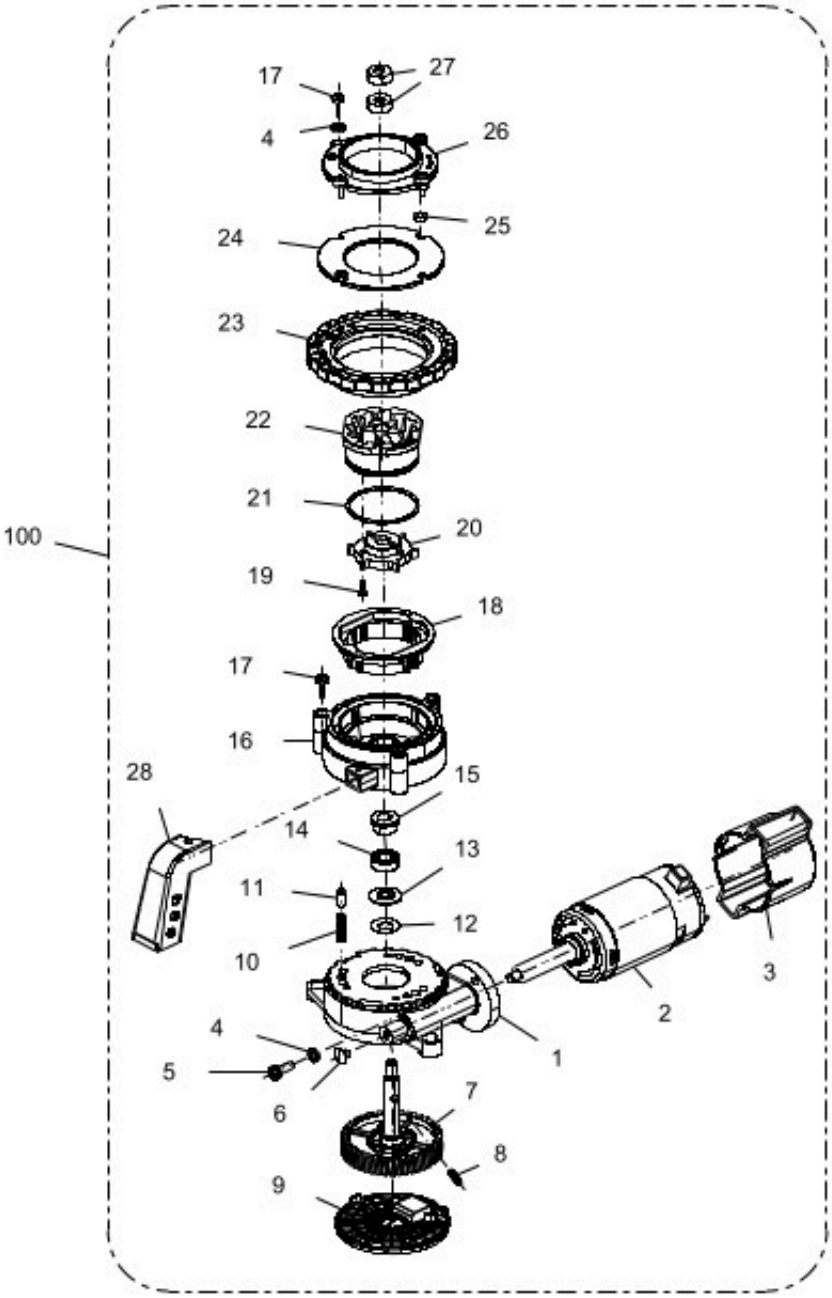

www.rheavendors.com tel: 0039 02 966 551 fax: 0039 02 96 55 086 email: rheavendors@rheavendors.com exclusive property of rheavendors group

GRINDER		
Pos.	**Code**	**Description**
1	Z0320001639NA	MOTOR SUPPORT (BLACK)
2/a	Z0090003047	GRINDER MOTOR 230V DC
2/b	Z0090002236	GRINDER MOTOR 100V
2/c	Z0090003048	GRINDER MOTOR 120V
3	Z0320001615NA	GRINDER SENSOR COVER BLACK
4	VIT0003103	SPRING WASHER 4,3
5	VIT0000013	SCREW HEAD TAP CAP M4X12
6	GUA0011023	PLUG (BLACK)
7	Z0320001608R	TRANSMISSION WHEEL
8	Z0320001704	GRINDER ROTATION PIN REINFORCE
9	Z0320001604NA	PLUG BLACK
10	Z0320001643	SPRING D.4X15X0,6
11	Z0320001624	REGULATION PIN
12	Z0320001629	CUP SPRING 16x8,2 SP. 0,4
13	Z0320001625	BUSH
14	VIT0009325	BEARING
15	Z0320001641	BUSHING
16	Z0320001602NAR	GRINDER BLADES SUPPORT
17	VIT0002469	SCREW HEAD TAP M3.5X10
18	Z0320001635-03NA	GRINDER SUPPORT BLACK
19	VIT0000121	SCREW COUNT FLAT HEAD M3X8
20	Z0320001636	EJECTOR
21	GUA0000124	SILICONE OR 2137
22	Z0320001680	CONIC BLADES PLUS
23	Z0320001605NAR	§ REGULATION RING NUT BLACK
24	Z0320001622	UPPER GRINDER FIXING
25	Z0320001666	SPACER D.4x7x2
26	Z0320001607NA	DUCT BLACK
27	Z0320001642	LOWER GRINDER FIXING NUT
28	Z0320004736-04	GRINDER CHUTE R.2011
100/a	Z0320001601CL3AL	§GRINDER VRFX 15° BREWER PLUS
100/b	Z0320001601CLE	§ GRINDER-BLACK 15° 120V

www.rheavendors.com tel: 0039 02 966 551 fax: 0039 02 96 55 086 email: rheavendors@rheavendors.com exclusive property of rheavendors group

PRO BREWER SUPPORT+MOTOR

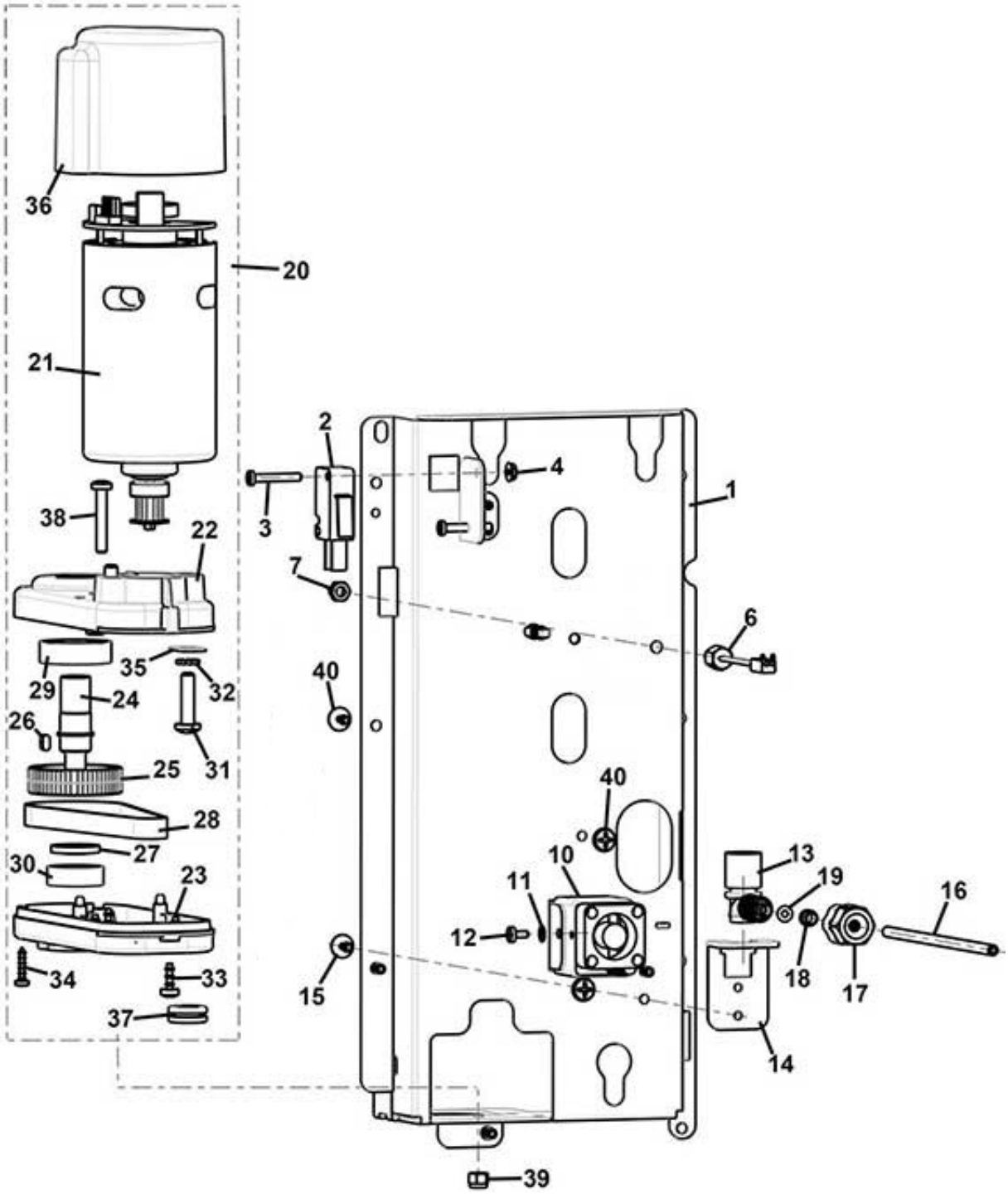

www.rheavendors.com tel: 0039 02 966 551 fax: 0039 02 96 55 086 email: rheavendors@rheavendors.com exclusive property of rheavendors group

PRO BREWER SUPPORT+MOTOR		
Pos.	**Code**	**Description**
1	Z0260014002	VARIFLEX BREWER SUPPORT
2	ELE0001522	MICROSWITCH
3	VIT0000006	SCREW HEAD TAP CAP M3X16
4	VIT0004701	NUT M3
6	ELE0000931	PROBE NTC 10K/TE
7	VIT0004816	NUT M4
10	ELE0000467-02	FAN HEATER 24V DC + BOARD
11	VIT0003102	SPRING WASHER 3,2
12	VIT0000002	SCREW HEAD TAP CAP M3X6
13	Z0250014084-02	FEMALE CONNECTOR
14	Z0260014009-01	H2O CONNECTOR SUPPORT
15	VIT0002009	SCREW ST HEAD CAP M3.5X6.5
16	TTEF02/04T	PTFE PIPE 2X4
17	Z0250014086	NUT
18	Z0100002014	LOCKING RING SO1-4
19	GUA0000061	OR 2010 VITON 80 BLACK
20	Z0090002250R	§ VARIFLEX BREW. GEARBOX MOTOR
21	Z0090002252-01	§ MOTOR 24V DC
22	Z0090002222NA	MOTOR UPPER CASE RAL9005
23	Z0090002223NA	MOTOR LOWER CASE RAL9005
24	Z0090002224	FEMALE CONNECTOR SHAFT
25	Z0090002255AN	PULLEY
26	VIT0006703	CLAMP
27	Z0090002226	SPACER
28	Z0090002258	BELT
29	VIT0009324	BEARING
30	VIT0009320	BEARING
31	VIT0000017	SCREW HEAD TAP CAP M5X20
32	VIT0003104	SPRING WASHER 5,3
33	VIT0002469	SCREW HEAD TAP M3.5X10
34	VIT0002014	SCREW ST HEAD CAP M2.9X13
35	Z0090002240	MOTOR SPACER
36	Z0090002235CK	MR GV BOARD COVER R.7037
37	GUA0010501	ELECTRICAL GROMMET DG 7,5
38	VIT0000015	SCREW HEAD TAP CAP M4X25
39	VIT0004815	NUT M4
40	VIT0002401	SCREW ST HEAD CAP M3.5X9.5
100	Z0250014086R	§ WATER INLET TUBE 0,15 mt
101	Z0090002224R	§ FEMALE CONNECTOR SHAFT

www.rheavendors.com tel: 0039 02 966 551 fax: 0039 02 96 55 086 email: rheavendors@rheavendors.com exclusive property of rheavendors group

PROFESSIONAL BREWER GROUP D.45

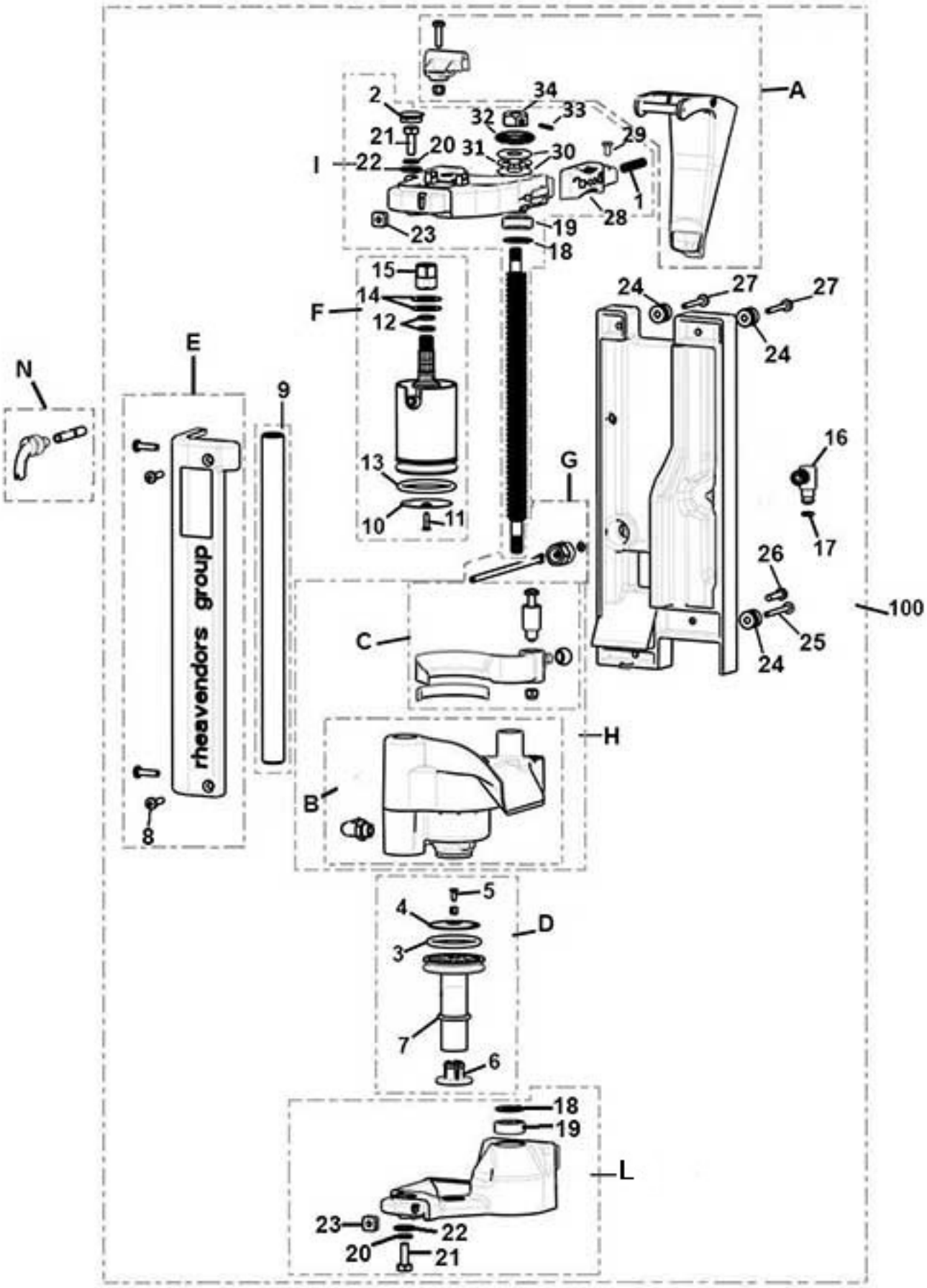

www.rheavendors.com tel: 0039 02 966 551 fax: 0039 02 96 55 086 email: rheavendors@rheavendors.com exclusive property of rheavendors group

PROFESSIONAL BREWER GROUP D.45		
Pos.	**Code**	**Description**
A	Z0250014008R	§ CHUTE D. 45
1	Z0250014081	SPRING
2	GUA0011022	PLUG
B	Z0250014022R	§ INFUSION CHAMBER D.45 included internal components and elbow
C	Z0250014024R	§ BRUSH D.45
D	Z0250014028R	§ LOWER FILTER HOLDER D.45
3	GUA0000097	OR 4131 RED SILICONE LSR70
4	Z0250014029	COFFEE FILTER DIAM. 37.3
5	VIT0000121	SCREW COUNT FLAT HEAD M3X8
6	Z0250014027R1	LOWER PISTON LOCK+SET SCREW
7	GUA0000103	OR 3075 SILICON
E	Z0250014019R	§ FRONTAL COVER
8	VIT0001009	SCREW HEAD TAP CAP M4X16
9	Z0250014013-04	CYLINDRICAL GUIDE
F	Z0250014045R	§ UPPER FILTER HOLDER D.45
10	Z0250008211	COFFEE FILTER 37,3
11	VIT0000129	SCREW COUNT HEAD M3X12
12	GUA0000045	OR 108 VITON 80 BLACK
13	GUA0000067	OR 4143 RED SILICONE LSR70
14	Z0250014048	SPRING
15	Z0250014086	NUT
16	Z0250014085	MALE CONNECTOR
17	GUA0000004	OR 104 NBR AL 75 BLACK
G	Z0250014086CL1	§WATER INLET TUBE 0,119 mt
H	Z0250014020R	§ INFUSION CHAMBER D.45
I	Z0250014005R2	§UPPER SUPPORT WITHOUT CHUTE
L	Z0250014012R	§ LOWER SUPPORT
18	Z0250014077	SPACER
19	VIT0009320	BEARING
20	VIT0003113	SPRING WASHER 6,4
21	VIT0000249	SCREW HEX HEAD M6X16
22	Z0250014079	WASHER D.15 D.6,5 SP.1,5
23	VIT0009112	NUT M4
24	Z0250014072	PIN
25	VIT0000033	SCREW HEAD TAP CAP M4X35
26	VIT0001011	SCREW HEAD TAP CAP M4X20
27	VIT0001006	SCREW HEAD TAP CAP M4X30
28	Z0250014082	BREWER STOPPER BUTTON
29	VIT0002009	SCREW ST HEAD CAP M3.5X6.5
30	VIT0009318	SPACER WASHER
31	VIT0009317	BEARING
32	GUA0001007	V RING GASKET VA16
33	VIT0007011	SET SCREW 4X4
34	Z0250014071	NUT M8
N	Z0020039539R	§ SPOUT DELIVERY D.4
100	Z0250014000CL	COFFEE BREWER VARIFLEX D 45

www.rheavendors.com tel: 0039 02 966 551 fax: 0039 02 96 55 086 email: rheavendors@rheavendors.com exclusive property of rheavendors group

PROFESSIONAL BREWER GROUP D.36

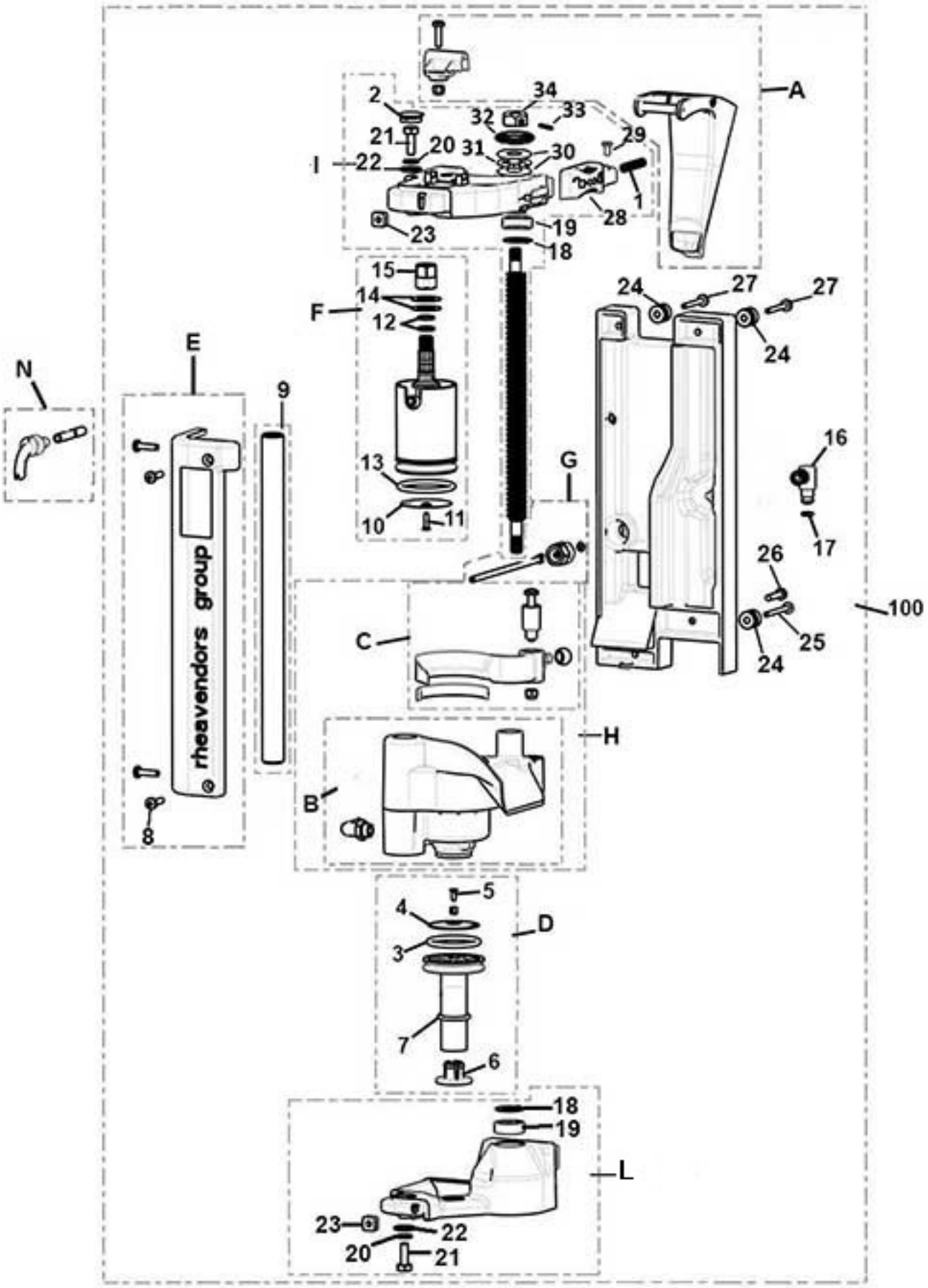

www.rheavendors.com tel: 0039 02 966 551 fax: 0039 02 96 55 086 email: rheavendors@rheavendors.com exclusive property of rheavendors group

PROFESSIONAL BREWER GROUP D.36		
Pos.	**Code**	**Description**
A	Z0250014033R	§ CHUTE D. 36
1	Z0250014081	SPRING
2	GUA0011022	PLUG
B	Z0250014032R	§ INFUSION CHAMBER D.36 included internal components and elbow
C	Z0250014034R	§ BRUSH D.36
D	Z0250014038R	§ LOWER FILTER HOLDER D.36
3	GUA0000080	OR 4112 RED SILICONE LSR70
4	Z0250008019	COFFEE FILTER
5	VIT0000121	SCREW COUNT FLAT HEAD M3X8
6	Z0250014027R1	LOWER PISTON LOCK+SET SCREW
7	GUA0000103	OR 3075 SILICON
E	Z0250014019R	§ FRONTAL COVER
8	VIT0001009	SCREW HEAD TAP CAP M4X16
9	Z0250014013-04	CYLINDRICAL GUIDE
F	Z0250014040R	§ UPPER FILTER HOLDER D.36
10	Z0250008099	COFFEE FILTER 33,4
11	VIT0000129	SCREW COUNT HEAD M3X12
12	GUA0000045	OR 108 VITON 80 BLACK
13	GUA0000080	OR 4112 RED SILICONE LSR70
14	Z0250014048	SPRING
15	Z0250014086	NUT
16	Z0250014085	MALE CONNECTOR
17	GUA0000004	OR 104 NBR AL 75 BLACK
G	Z0250014086CL1	§WATER INLET TUBE 0,119 mt
H	Z0250014030R	§ CHAMBER D.36
I	Z0250014005R2	§UPPER SUPPORT WITHOUT CHUTE
L	Z0250014012R	§ LOWER SUPPORT
18	Z0250014077	SPACER
19	VIT0009320	BEARING
20	VIT0003113	SPRING WASHER 6,4
21	VIT0000249	SCREW HEX HEAD M6X16
22	Z0250014079	WASHER D.15 D.6,5 SP.1,5
23	VIT0009112	NUT M4
24	Z0250014072	PIN
25	VIT0000033	SCREW HEAD TAP CAP M4X35
26	VIT0001011	SCREW HEAD TAP CAP M4X20
27	VIT0001006	SCREW HEAD TAP CAP M4X30
28	Z0250014082	BREWER STOPPER BUTTON
29	VIT0002009	SCREW ST HEAD CAP M3.5X6.5
30	VIT0009318	SPACER WASHER
31	VIT0009317	BEARING
32	GUA0001007	V RING GASKET VA16
33	VIT0007011	SET SCREW 4X4
34	Z0250014071	NUT M8
N	Z0020039539R	§ SPOUT DELIVERY D.4
100	Z0250014060CL	§ COFFEE BREWER VARIFLEX D.36

www.rheavendors.com tel: 0039 02 966 551 fax: 0039 02 96 55 086 email: rheavendors@rheavendors.com exclusive property of rheavendors group

products container

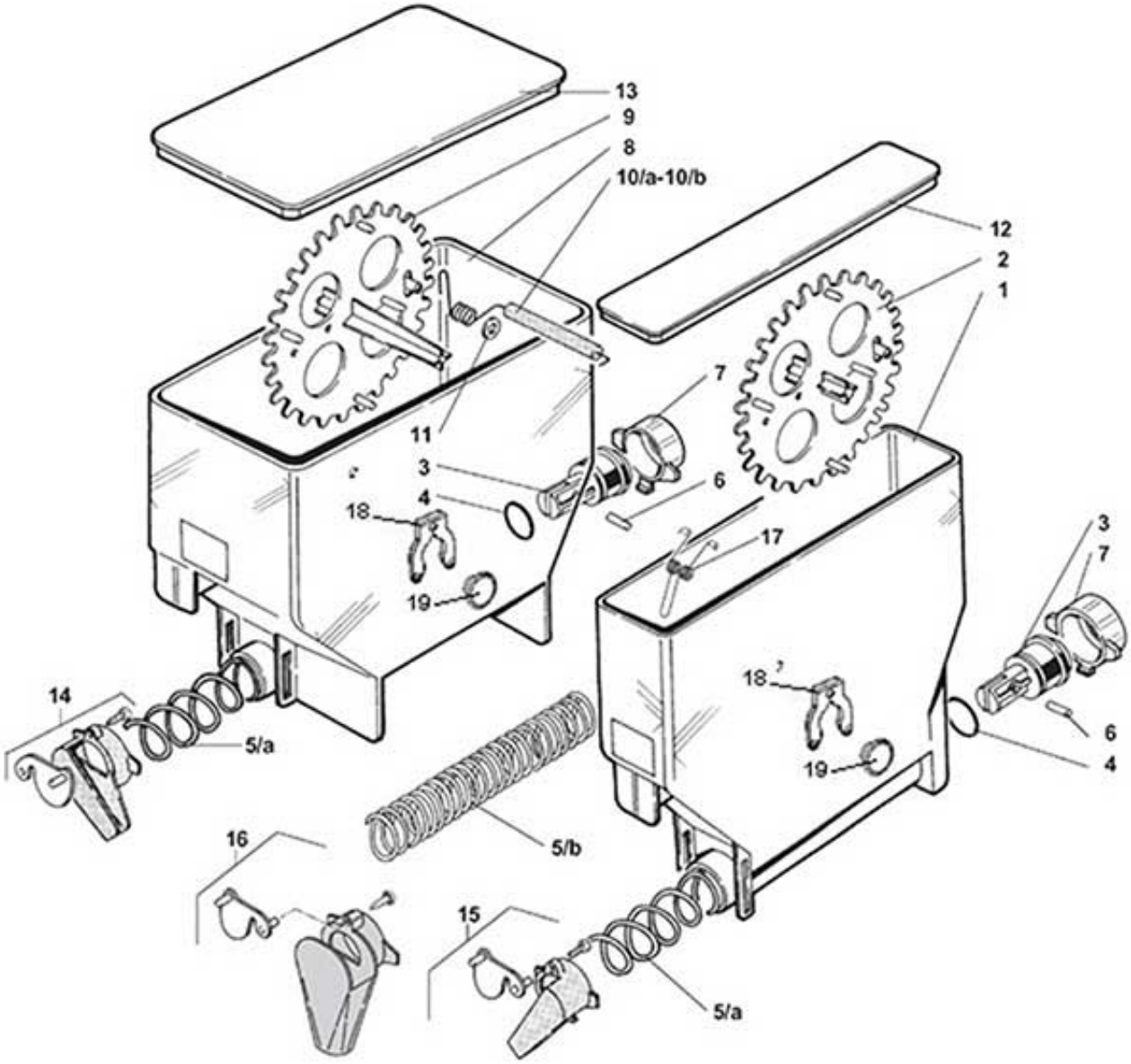

www.rheavendors.com tel: 0039 02 966 551 fax: 0039 02 96 55 086 email: rheavendors@rheavendors.com exclusive property of rheavendors group

products container		
Pos.	**Code**	**Description**
1	Z0230030500	INGREDIENT CANISTER 54 190
2	Z0230030236AB	§ WHEEL MM54
3	Z0230030012	SPIRAL PIN
4	GUA0000083	OR 123 RED SILICONE A70
5/a	Z0230030014	SPIRAL 18
5/b	Z0230030013	SPIRAL 9
6	VIT0005106	PIN 2X14
7	Z0230030011	REAR BUSH
8	Z0230030520	INGREDIENT CANISTER 110-190
9	Z0230030237AB	§ WHEEL MM110
10/a	Z0230030064	AGITATOR 112 - RIGHT OUTLET
10/b	Z0230030062	AGITATOR 112 - LEFT OUTLET
11	VIT0003210	WASHER 8,4X16X1,6
12	Z0230030156	CANISTER 54 LID
13	Z0230030158	CANISTER 110 LID
14/a	Z0230030058R	§ INGRED. CHUTE-RIGHT ORANGE
14/b	Z0230030044R	§ INGREDIENT CHUTE-RIGHT RED
15/a	Z0230030057R	§ INGREDIENT CHUTE-LEFT ORANGE
15/b	Z0230030043R	§ INGREDIENT CHUTE-LEFT RED
16	Z0230030059R	§ INGRED. CHUTE-FRONTALORANGE
17	Z0230030060-05	PRODUCT AGITATOR
18	Z0230030239	WHEEL PIN FORK
19	Z0230030238-02	WHEEL PIN
100	Z0230030522R	§ CAN. 110-190 AGIT.18 W/LID-R
101	Z0230030525R	§ CAN. 110-190 AGIT.18 W/LID-L
102	Z0230030506R	§ CANIS. 54-190 WHEEL18 W/LID
103	Z0230030502R	§ CANIS. 54-190 WHEEL9 W/LID

www.rheavendors.com tel: 0039 02 966 551 fax: 0039 02 96 55 086 email: rheavendors@rheavendors.com exclusive property of rheavendors group

coffee beans container

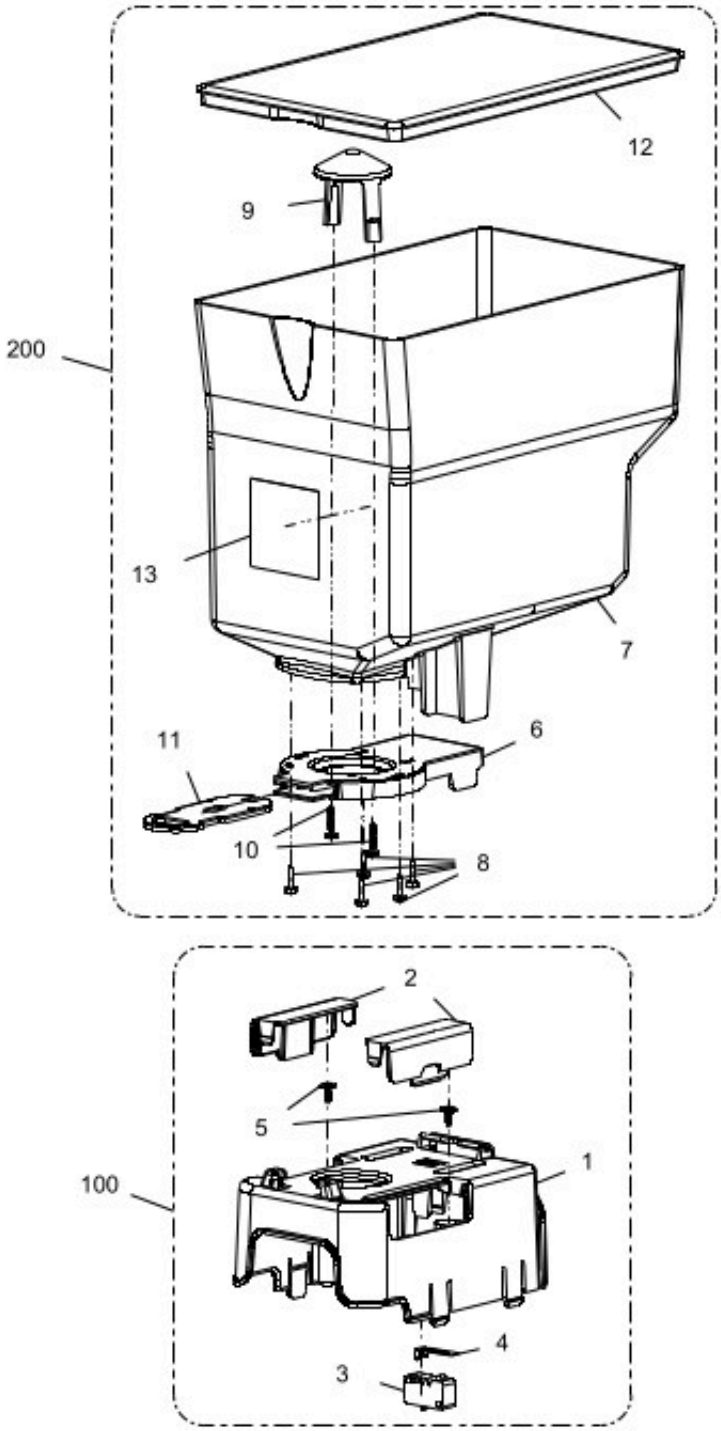

www.rheavendors.com tel: 0039 02 966 551 fax: 0039 02 96 55 086 email: rheavendors@rheavendors.com exclusive property of rheavendors group

coffee beans container		
Pos.	**Code**	**Description**
1	Z0230015738-03	GRINDER COVER
2	Z0230015229-02	REGULATION COVER
3	CBLB185022	MICRO SWITCH W/CABLE
4	ELE0001911	MICROSWITCH LEVER
5	VIT0002401	SCREW ST HEAD CAP M3.5X9.5
6	Z0230015231-02	COFFEE BEANS HOPPER ADAPTOR
7	Z0230015253-02TR	COFFEE CONTAINER W/O GUIDE 2KG
8	VIT0002479	SCREW HEAD TAP 3,5X12
9	Z0230015227TR	GRINDER COVER
10	VIT0002466	SCREW HEAD TAP M3.5X16
11	Z0230015224IC	COFFEE BEANS HOPPER STOPPER
12	Z0230015252-02TR	COFFEE CONTAINER COVER 2 KG.
13	1010100126	HANDS CRUSH ATTENTION LABEL
100	Z0230015738R3	§ GRINDER COVER
200	Z0230015250CL1-01	§ COFFEE BEANS HOPPER W/O SPLI

www.rheavendors.com tel: 0039 02 966 551 fax: 0039 02 96 55 086 email: rheavendors@rheavendors.com exclusive property of rheavendors group

OPTIONAL KIT

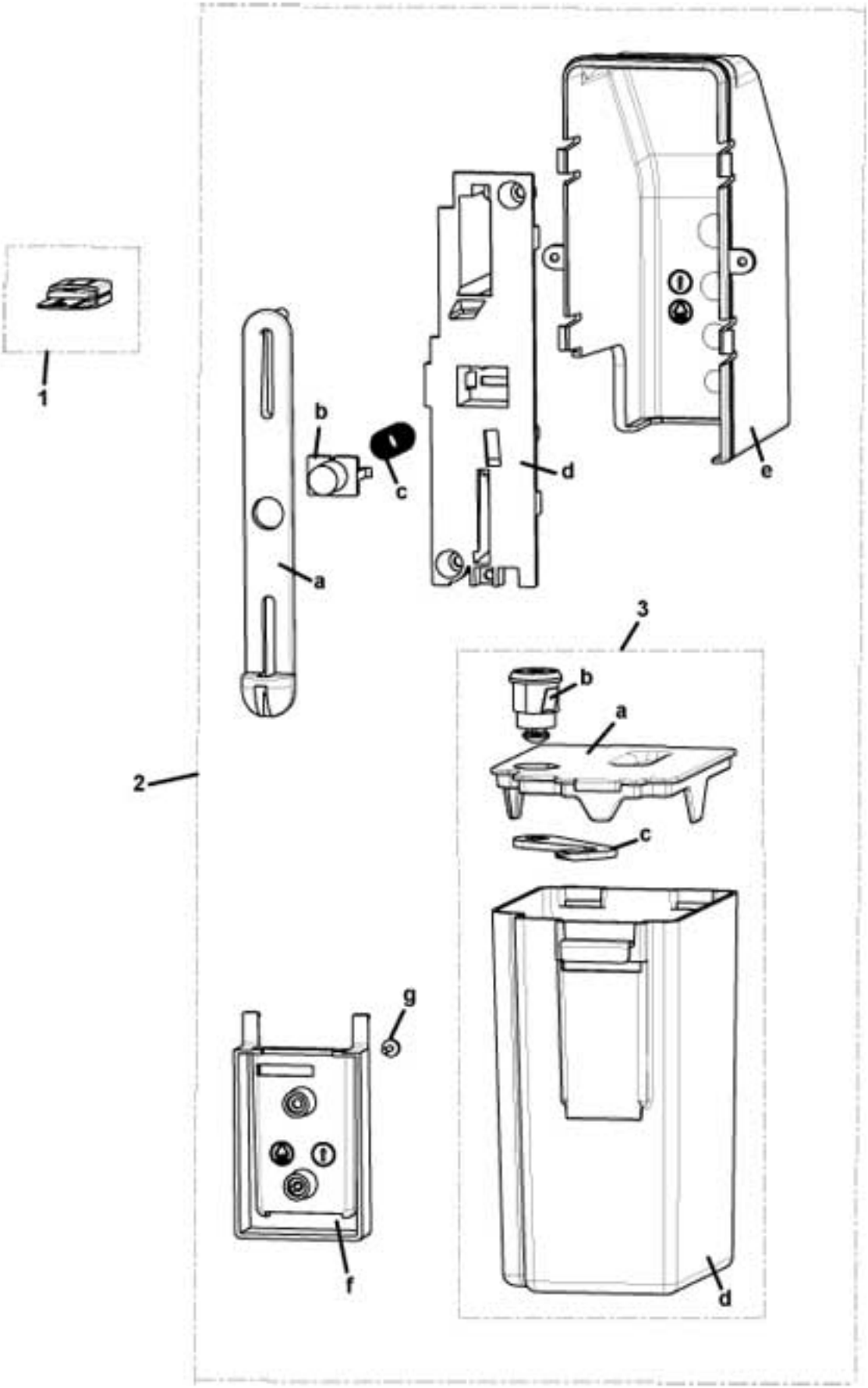

www.rheavendors.com tel: 0039 02 966 551 fax: 0039 02 96 55 086 email: rheavendors@rheavendors.com exclusive property of rheavendors group

OPTIONAL KIT		
Pos.	**Code**	**Description**
1	Z0020040310CL/2	RHEA FLASH MEMORY(RED)
2_1	D2109600A0000	KIT W/FIT W/O MECH RAL9005
2_2	D2109600A1000	KIT W/FIT W/O MECH RAL9006
2_1/a	Z0020035031NA	COIN ENTRY PLATE BLACK
2_2/a	Z0020035031CM	COIN ENTRY PLATE RAL9006
2/b	Z0020035033CM	COIN RETURN BUTTON RAL9006
2/c	Z0020035034	COIN RETURN BUTTON SPRING
2/d	Z0020035032NA	PAYM SYSTEM SUPPORT
2/e	Z0020039510NA	PAY. SYSTEM COVER BLACK
2/f	Z0020039528NA	COIN BOX SUPPORT
2/g	VIT0002469	SCREW HEAD TAP M3.5X10
3	Z0020039525R	§ COIN BOX
3/a	Z0020039527NA	COINS BOX LID BLACK
3/b	SER0000015	LOCK MM20 C.3430
3/c	Z0020037128	COIN BOX HOOK
3/d	Z0020039526NA	COIN BOX RAL 9005

www.rheavendors.com tel: 0039 02 966 551 fax: 0039 02 96 55 086 email: rheavendors@rheavendors.com exclusive property of rheavendors group

WIRINGS

www.rheavendors.com tel: 0039 02 966 551 fax: 0039 02 96 55 086 email: rheavendors@rheavendors.com exclusive property of rheavendors group

WIRINGS		
Pos.	**Code**	**Description**
1	CBLB185001	DOOR SWITCH WIRING
2	CBLB185008	DOOR SWITCH WIRING
3	CBLB185022	MICRO SWITCH W/CABLE
4	CBLB185052	ACTUATOR WIRING 230V
5	CBLB241001	CABLE ATTUATORS 24V BE
6	CBLB241003	CABLE ATTUATORS 230V HU
7	CBLB241004	CABLE ATTUATORS 24V HU
8	CBLB241005	CABLE EV EB
9	CBLB241008	CABL.KLIXON-SSR
10	CBLB241010	CABL. IN SSR
11	CBLB241011	CABL.OUT 120V SSR E
12	CBLB241021	CABL OUT KLIXON
13	CBLXM00108	LOGO ENLIGHTENMENT WIRING
14	CBLXM00109	LIGHTING LABELS SHORT WIRING
15	CBLXM00110	MED LABELS ENLIGHTING WIRING
16	CBLXM00111	LABELS ENLIGHTENMENT WIRING
17	CBLXS00066	GROUND WIRING For 120V version
18	CBLXS00228	LED BOARD WIRING
19	CBLXS00278	POWER SUPPLY WIRING
20	CBLXS00296	120V SWITCHING BOARD WIRING
21	CBLXS00310	PIGGY-BACK 200 WIRING
22	CBLXS00310	PIGGY-BACK 200 WIRING
23	CBLXS00311	SUPPLY DOOR 5/24V WIRING
24	CBLXSC0002	POWER WIRING 230V
25	CBLXSC0051	FUSE FILTER WIRING
26	ELT0030657	FLAT CABLE 16P F+F CM130

www.rheavendors.com tel: 0039 02 966 551 fax: 0039 02 96 55 086 email: rheavendors@rheavendors.com exclusive property of rheavendors group