vending machine

file immagini/ricambi/copertine/rhea business line grande vho.jpg NOT exists!!!!!!

spare parts manual

www.rheavendors.com tel: 0039 02 966 551 fax: 0039 02 96 55 086 email: rheavendors@rheavendors.com exclusive property of rheavendors group

cabinet

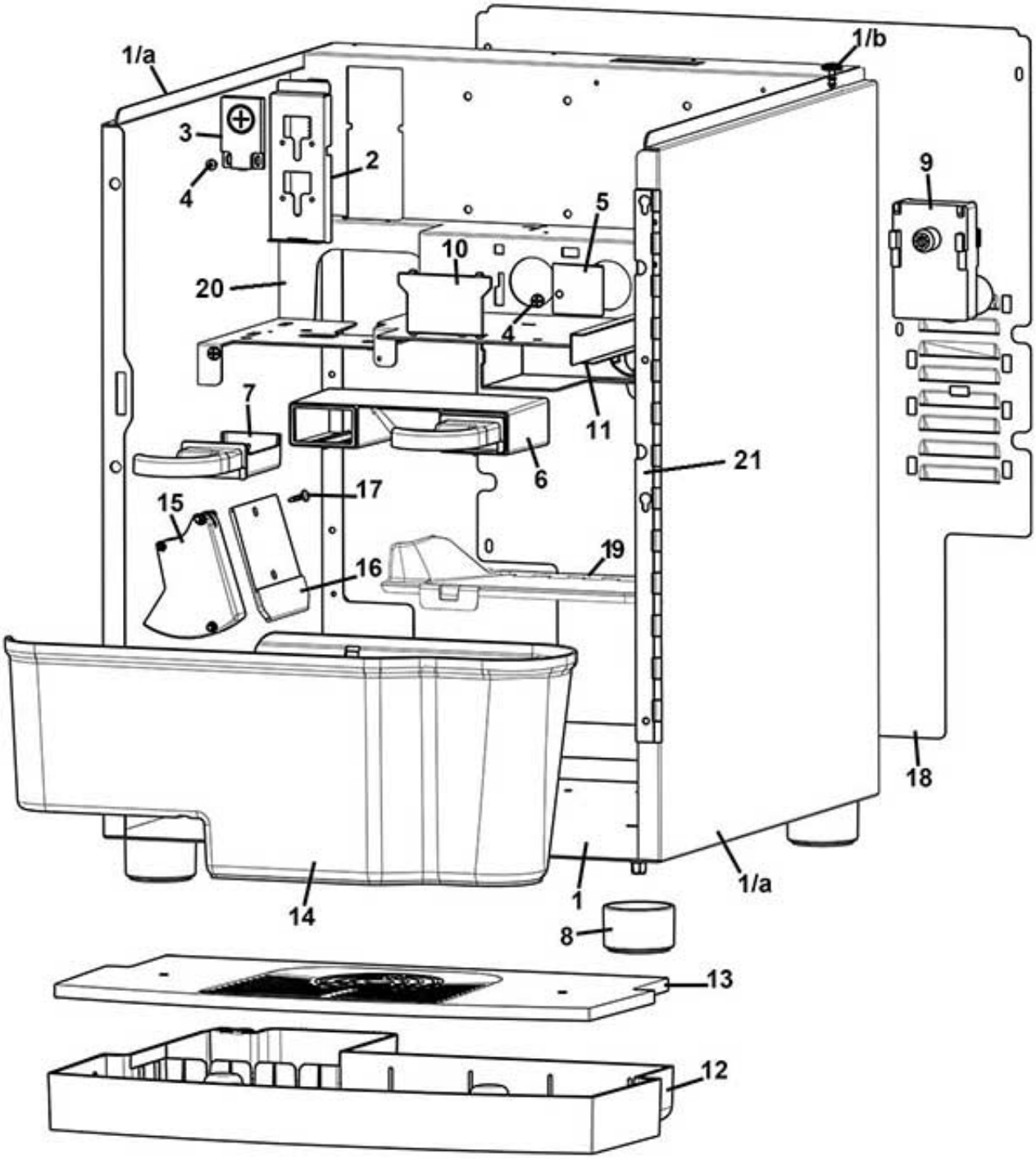

www.rheavendors.com tel: 0039 02 966 551 fax: 0039 02 96 55 086 email: rheavendors@rheavendors.com exclusive property of rheavendors group

cabinet		
Pos.	**Code**	**Description**
1	Z001A122100NAR	BLACK CABINET + PACKAGE
1/a	Z0010024183NA	SIDE COVER SX-DX XS
1/b	VIT0000106	SCREW COUNT FLAT HEAD M4X8
2	Z0010024162	COFFEE BEAN HOPPER SENSOR SUP.
3	ELE0004001	§ CAPACITIVE SENSOR
4	VIT0001010	M 3x12 TCB SCREW
5	Z0010024186NA	PRODUCTS SENSOR COVER BLACK
6	Z0010027037	TRAP DRAWER
7	Z0010027022	TRAP DRAWER REMOVABLE
8	Z0010024111CL1	§ MACHINE FOOT D.50X29 RAL9005
9	Z0090002113	MOTOR 24 DC 97 RPM
10	Z0010020029NA	GEARBOX MOTOR PLUG BLACK
11	Z0010024187NA	WIRING SUPPORT (BLACK)
12	Z0020039036CL	§ DRIP TRAY+SPRING BLACK
13	Z0020039035NA	DRIP TRAY GRID BLACK
14	Z0010024154	GROUNDS CONTAINER
15	Z0010024164-02	GROUNDS EJECTOR
16	Z0010024165	GROUNDS EJECTOR PLATE
17	VIT0002027	SCREW ST HEAD CAP M3.5X13
18	Z0010024192NA	REAR PANEL (BLACK)
19	Z001A128000NA-03	WASTE PADS CONTAINERLID
20	Z0010024191NA	GRINDER MOTORIZED SUPPORT
21	Z001A122121	DOOR HINGE
100	Z0010024164R	§ GROUNDS EJECTOR Pos.15+16+17

www.rheavendors.com tel: 0039 02 966 551 fax: 0039 02 96 55 086 email: rheavendors@rheavendors.com exclusive property of rheavendors group

UPPER COVER

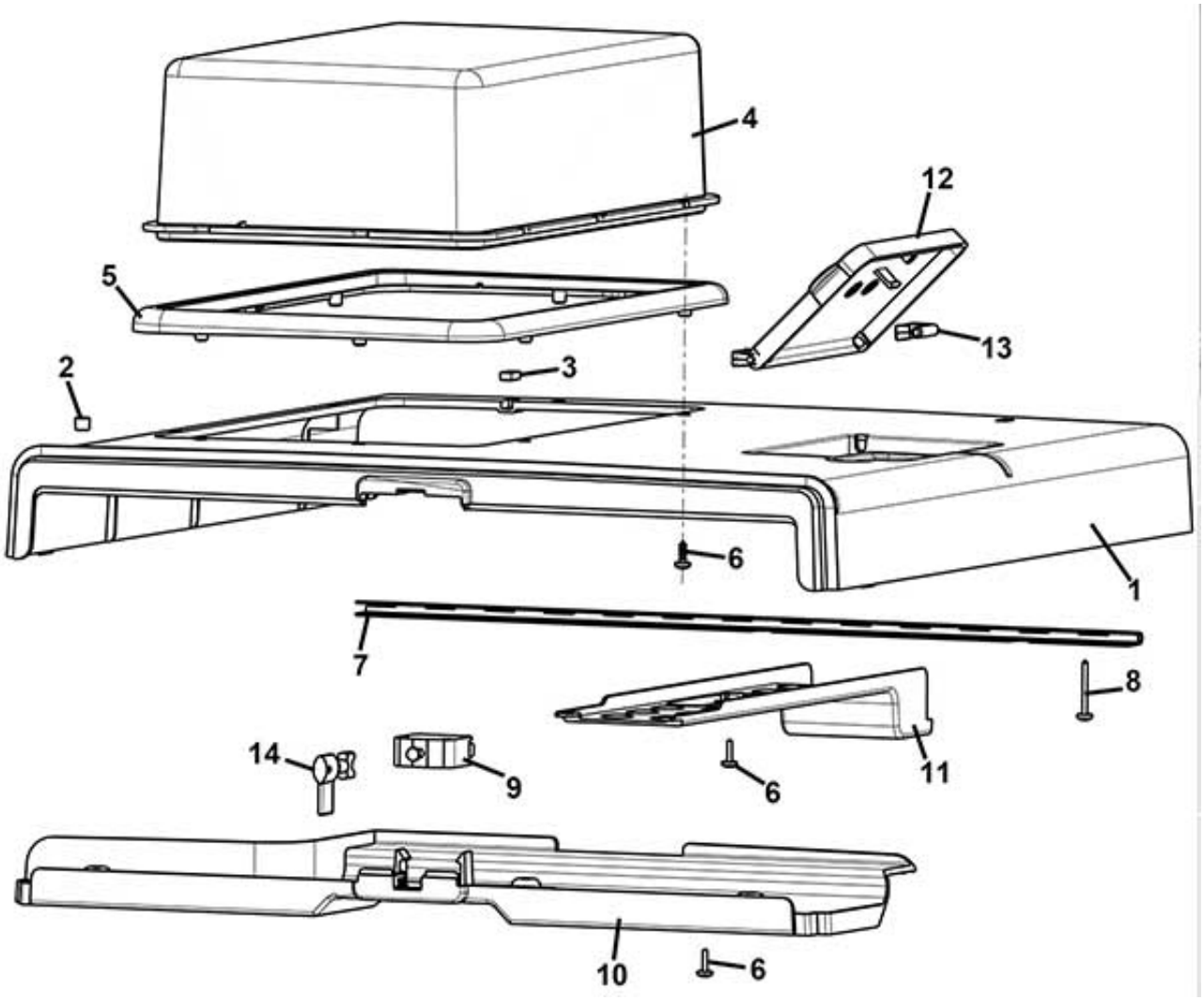

www.rheavendors.com tel: 0039 02 966 551 fax: 0039 02 96 55 086 email: rheavendors@rheavendors.com exclusive property of rheavendors group

UPPER COVER		
Pos.	**Code**	**Description**
1/a	Z0010024140NA	UPPER COVER RAL 9005
1/b	Z0010024140UL	UPPER COVER RAL 9005 For 120V version
2	Z0010027344	RING PLUG
3	Z0010027343	PLUG SUPPORT COVER
4	Z0230015255TR	COFFEE BEANS HOPPER COVER
5	Z0230015256NA	COFFEE BEANS HOPPER FRAME
6	VIT0002469	SCREW HEAD TAP M3.5X10
7	Z0010024012	HINGE D.5,5 L.390
8	VIT0002456	SCREW HEAD TAP M3.5X25
9	ELE0002019	SWITCH 16A 250V
10/a	Z0010024114NA	UPPER COVER CLOSING BLACK
10/b	Z0010024114UL	UPPER COVER CLOSING BLACK For 120V version
11/a	Z0010024119NA	CABLE COVER
11/b	Z0010024119UL	CABLE COVER (RAL9005) For 120V version
12/a	Z0010024118NA	INLET WATER LID XS08 RAL 9005
12/b	Z0010024118UL	INLET WATER LID RAL 9005 For 120V version
13	Z0020037124NA	PIN
14	Z0270011109IC	SERVICE KEY RAL2011

www.rheavendors.com tel: 0039 02 966 551 fax: 0039 02 96 55 086 email: rheavendors@rheavendors.com exclusive property of rheavendors group

rear cabinet

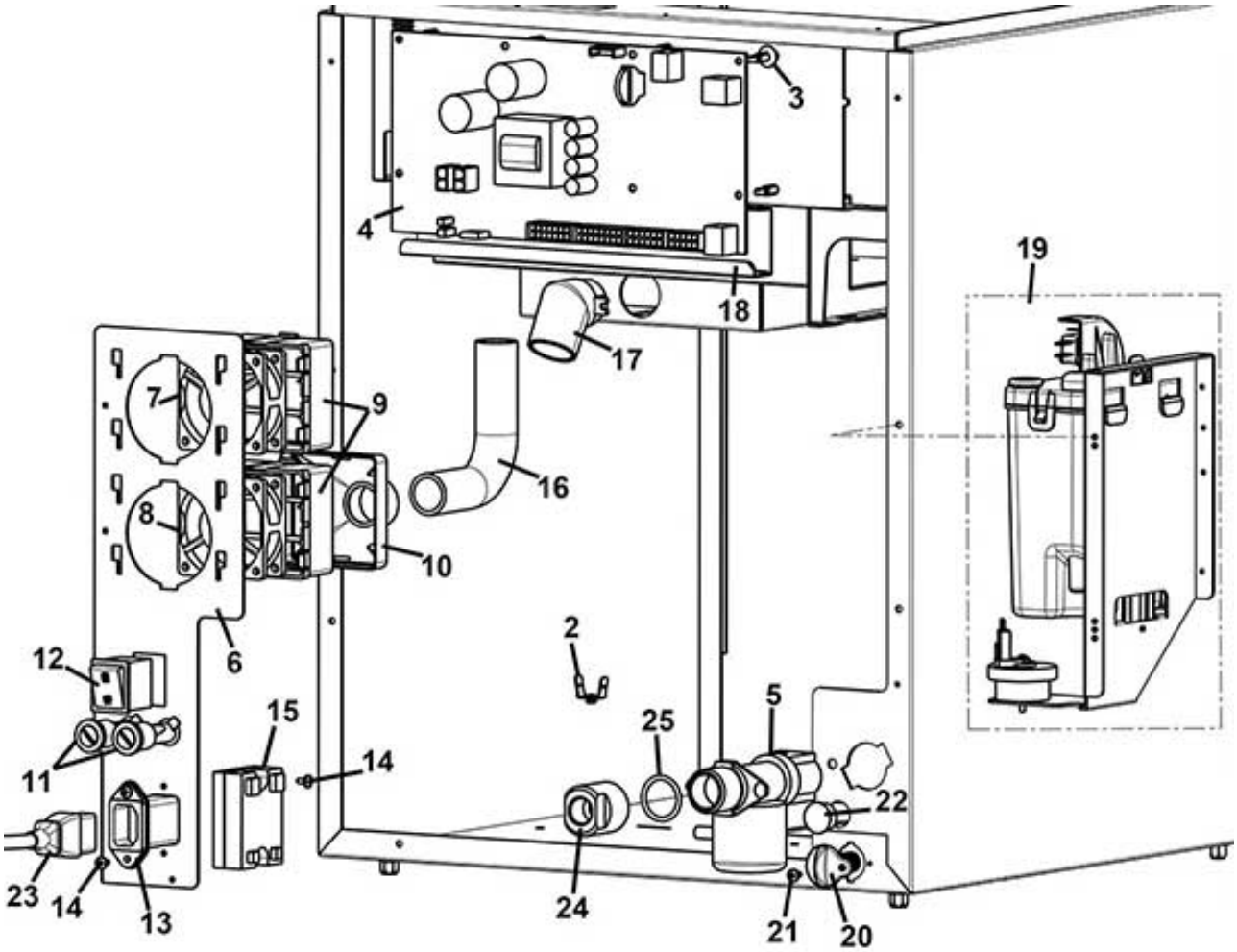

www.rheavendors.com tel: 0039 02 966 551 fax: 0039 02 96 55 086 email: rheavendors@rheavendors.com exclusive property of rheavendors group

rear cabinet		
Pos.	**Code**	**Description**
2	ELE0060520	GROUND PIN
3	ELE0062020	BOARD SUPPORT
4/a	SCH0008964-01	CPU/POWER BOARD
4/b	SCH0008964CL	§CPU/PWR BOARD 100/120V For 100/120V version
5	Z0110001058	WATER INLET VALVE 24V DC
6/a	Z0130013030NA	PLUG+FAN (BLACK)
6/b	Z0130013034NA	PLUG+FAN 16A (BLACK) For 120V version
7	ELE0000462	FAN 24V DC-LOW SPEED
8	ELE0000461	FAN 24V DC-HIGH SPEED
9	Z0010027064	FAN SUPPORT
10	Z0010027065	FAN CONNECTOR
11/a	ELE0003508CL	FUSE HOLDER+FUSE 12A
11/b	ELE0003509CL2	FUSE HOLDER+FUSE 15A UL For 120V version
12/a	ELE0002014CL3	BIPOLAR SWITCH 15A 250V
12/b	ELE0002014	BIPOLAR SWITCH 15A 250V For 120V version
13/a	ELE0002322	MAINS SOCKET 250V 10A
13/b	ELE0002318	MAINS SOCKET 115/250V 20/16A For 120V version
14	VIT0002010	SCREW ST HEAD CAP M3.5X9.5
15	ELE0001012R	§ RELAY Check the heating element connectors status
16	TEOL000001CL3	EXTRACTOR TUBE D.20 220MM
17	Z0010027043NA	EXTRACTOR TUBE BLACK
18	Z0010024161NA	WIRING SUPPORT (BLACK)
19		See table water inlet panel
20	Z0600016455	H2O OUTLET PLUG
21	VIT0002009	SCREW ST HEAD CAP M3.5X6.5
22	GUA0011010	PLUG
23	ELE0055008	SUPPLY CABLE+PLUG+SCHUK.SOCKET
24	Z0100006001-01	F/F CYLINDRIC 3/4-3/8 REDUCT.
25	GUA0000021	OR 130 NBR AL 75 BLACK

www.rheavendors.com tel: 0039 02 966 551 fax: 0039 02 96 55 086 email: rheavendors@rheavendors.com exclusive property of rheavendors group

DOOR

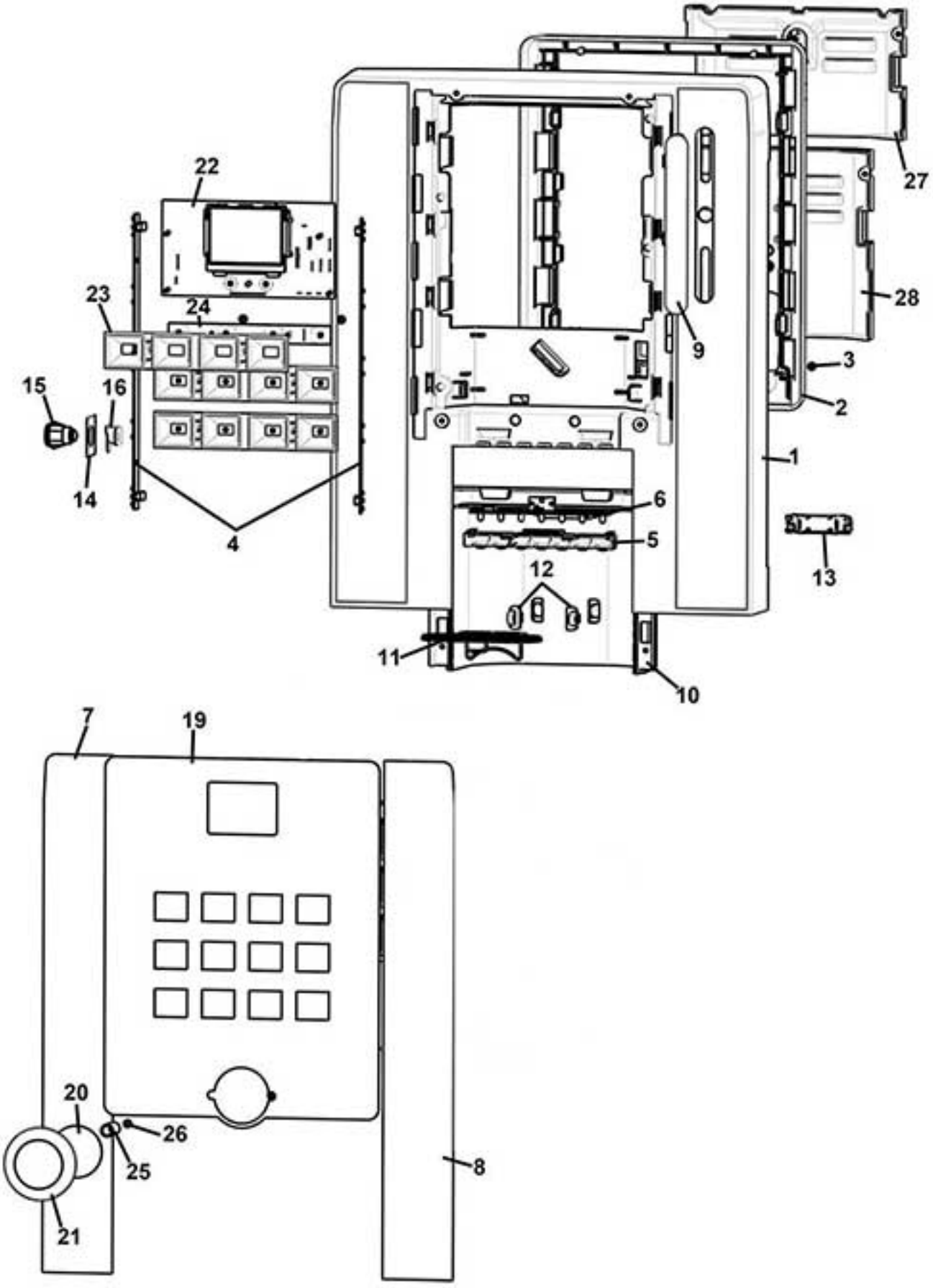

www.rheavendors.com tel: 0039 02 966 551 fax: 0039 02 96 55 086 email: rheavendors@rheavendors.com exclusive property of rheavendors group

DOOR		
Pos.	**Code**	**Description**
1	Z0020039131NA	DOOR (RAL9005)
2	Z0020039132NA	DOOR FRAME (BLACK)
3	VIT0002466	SCREW HEAD TAP M3.5X16
4	SCH0008120	LIGHTING BOARD
5	Z0020039078TR	CUP STAT.ENLIGHTENMENT SUPPORT
6	SCH0008144	LIGHTING CUP STATION BOARD
7/a	Z0020039043	LEFT PANEL RAL9005
7/b	1030000075	SIDE PANEL LEFT
8/a	Z0020039049	RIGHT PANEL W/O LOGO RAL9005
8/b	1030000074	SIDE PANEL RIGHT
9	Z0020039537NA	COIN ENTRY BLANK.PLATE
10	Z0020039071NA	CUPS STATION FRAME BLACK
11	Z0020039072NA-02	CUP SUPPORT BLACK
12	Z0020039073NA	CUP SUPPORT PIN BLACK
13	Z0020039087-03IC	CUP HOLDER BRACKET
14	Z0020037014	LOCK PLATE
15	SER0000024/1	LOCK INOX RVI MM20 C.3374
16	Z0020037015	LOCK PLATE
19	1030000160R	§PLEX+CAP.KEYPD+BLACK PANEL
20	1030000297	BL LOGO
21	Z0020039084CL	§ DOOR LOGO FRAME CROMO
22	SCH0009983-01	3,5" DISPLAY BOARD
23	Z0020037675AB	LIGHT BUTTONS GUIDE
24	SCH0010060	KEYPAD LIGHTING BOARD
25	Z0020039137	SPACER
26	VIT0002461	SCREW HEAD TAP M4.2X26
27	Z0020039134IC	UPPER DOOR RAL2011
28	Z0020039076-01NA	LOWER INTER. DOOR COVER BLACK

www.rheavendors.com tel: 0039 02 966 551 fax: 0039 02 96 55 086 email: rheavendors@rheavendors.com exclusive property of rheavendors group

mixer plan (espresso version)

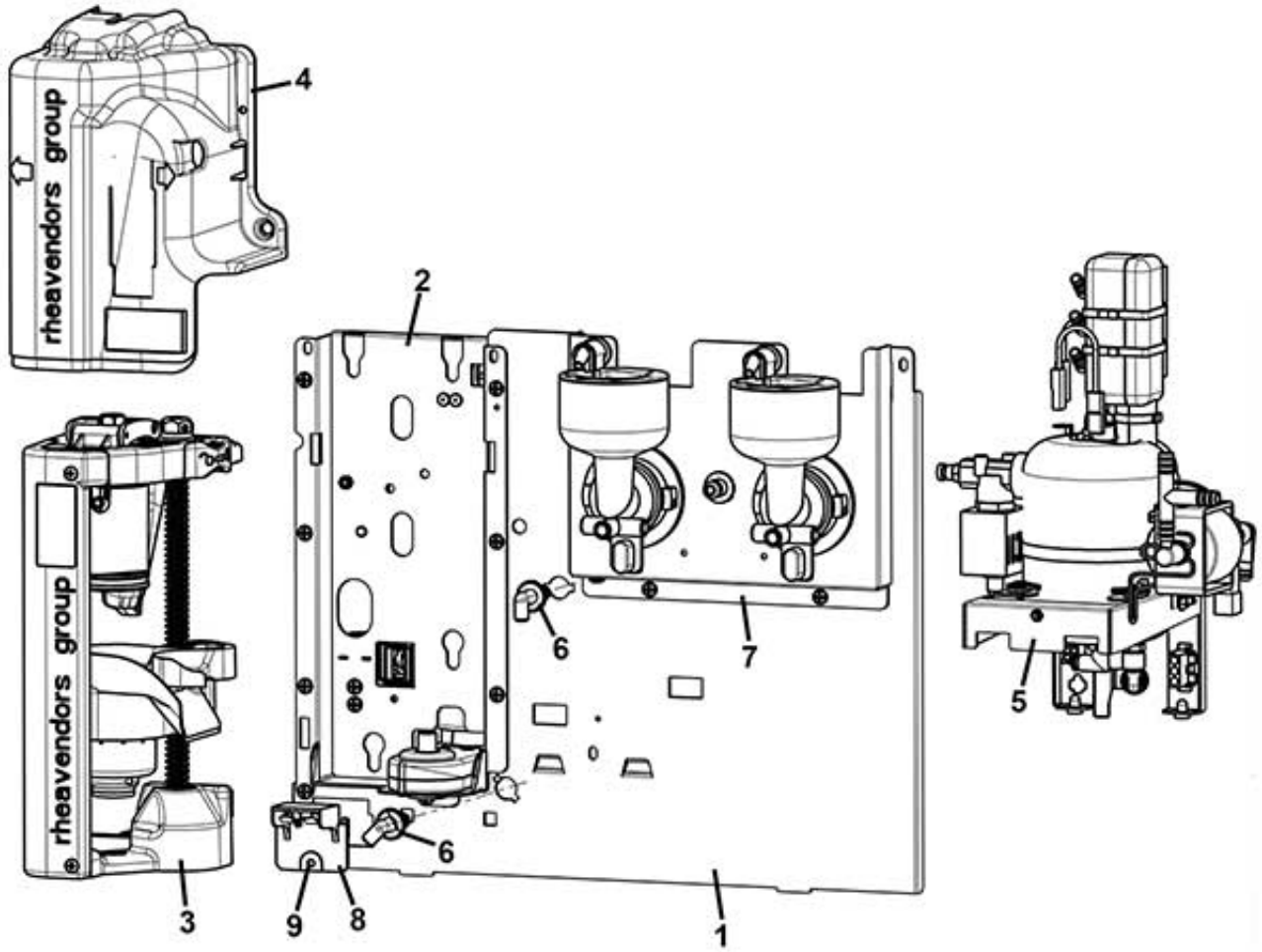

www.rheavendors.com tel: 0039 02 966 551 fax: 0039 02 96 55 086 email: rheavendors@rheavendors.com exclusive property of rheavendors group

mixer plan (espresso version)		
Pos.	**Code**	**Description**
1	Z0260014031-04NA	VARIFLEX MOUNTING PLATE BLACK
2		See table PRO BREWER SUPPORT+MOTOR
3		See table PROFESSIONAL BREWER GROUP D.45
4	Z0250014007CL1	§ VARIFLEX BREWER COVER-TT
5		See table ESPRESSO boiler support
6	Z0080100084	90° CONNECTOR
7		See table 2 MIXERS SUPPORT ASSEMBLY
8	Z0010020836CL	§DRIP TRAY SENSOR
9	VIT0002009	SCREW ST HEAD CAP M3.5X6.5

www.rheavendors.com tel: 0039 02 966 551 fax: 0039 02 96 55 086 email: rheavendors@rheavendors.com exclusive property of rheavendors group

ESPRESSO boiler support

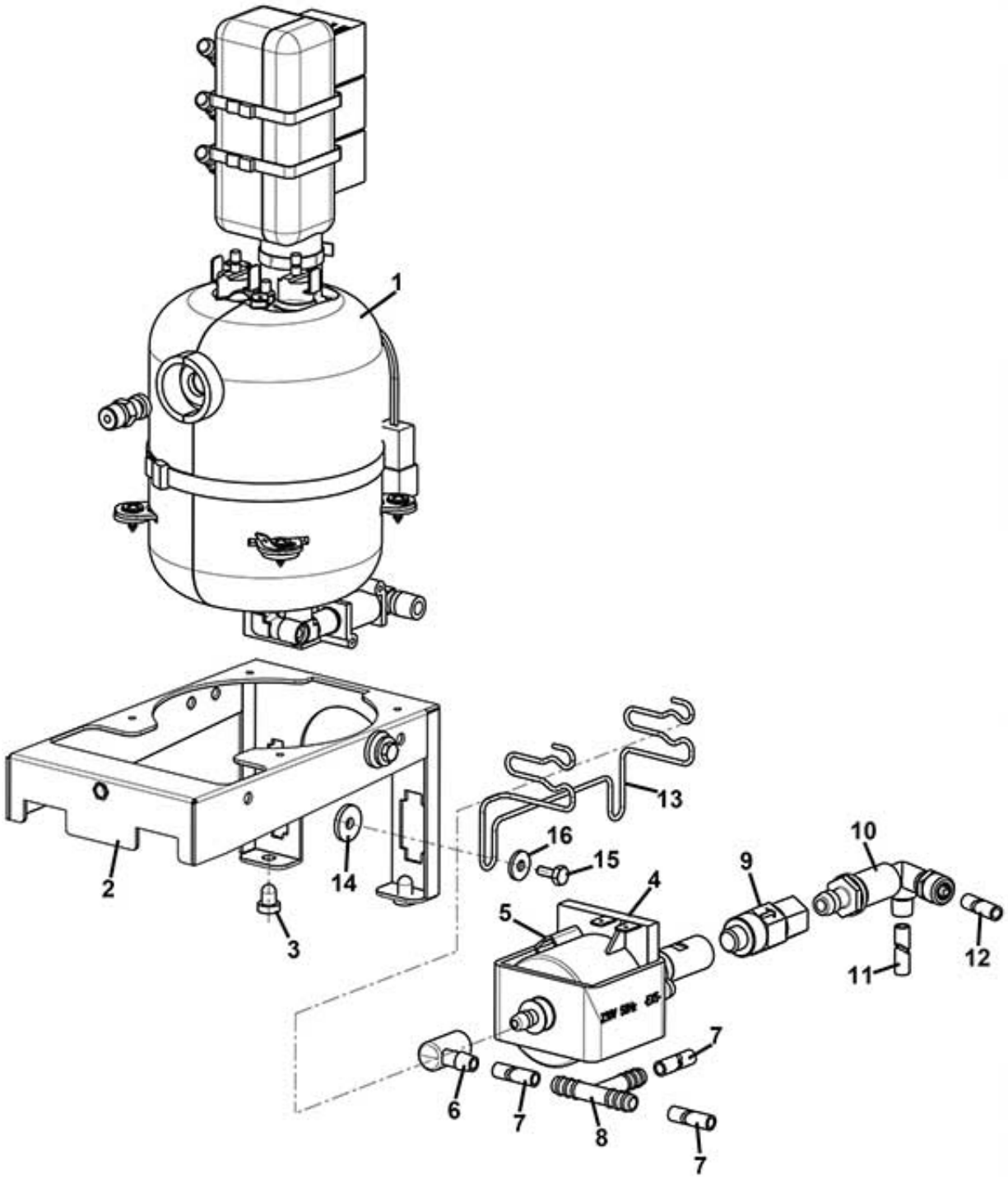

www.rheavendors.com tel: 0039 02 966 551 fax: 0039 02 96 55 086 email: rheavendors@rheavendors.com exclusive property of rheavendors group

ESPRESSO boiler support		
Pos.	**Code**	**Description**
1		See table express coffee group boiler
2	Z0600019740NA	BOILER SUPPORT BLACK
3	Z0020018061	SELECTION BUTTON PLUG
4/a	Z0110004041	PUMP EX5 230V-50HZ
4/b	Z0110004046	PUMP EX5 200V-60HZ
4/c	Z0110004103	PUMP EP5 120V 60HZ For 120V version
4/d	Z0110004042	PUMP EX5 220V 50-60HZ For version 220V
5	ELE0000915	PUMP THERMOPROTECTOR
6	Z0110004023	CONNECTOR
7/a	TSIL05/08T-10	SILICON HOSE 5X8 MT.10
7/b	TSIL05/08T-50	SILICON HOSE 5X8 MT.50
8	Z0100003022	T CONNECTOR 461 TS UL
9	Z0110002012R	§ SAFETY VALVE E:1/8M O:1/8F
10/a	Z0110004070	BY PASS VALVE 11 BAR
10/b	Z0110001151R	VALVE 3W W/BY-PASS 11BAR For 120V version
11/a	TSIL05/08T-10	SILICON HOSE 5X8 MT.10
11/b	TSIL05/08T-50	SILICON HOSE 5X8 MT.50
12	TTEF04/06T	PTFE PIPE 4X6
13	Z0110004038	PUMP SUPPORT
14	1600001098	RUBBER SPACER D. 4,5
15	VIT0000205	SCREW HEX HEAD M4X10
16	VIT0003301	WASHER 4,3X12X1,5

www.rheavendors.com tel: 0039 02 966 551 fax: 0039 02 96 55 086 email: rheavendors@rheavendors.com exclusive property of rheavendors group

express coffee group boiler

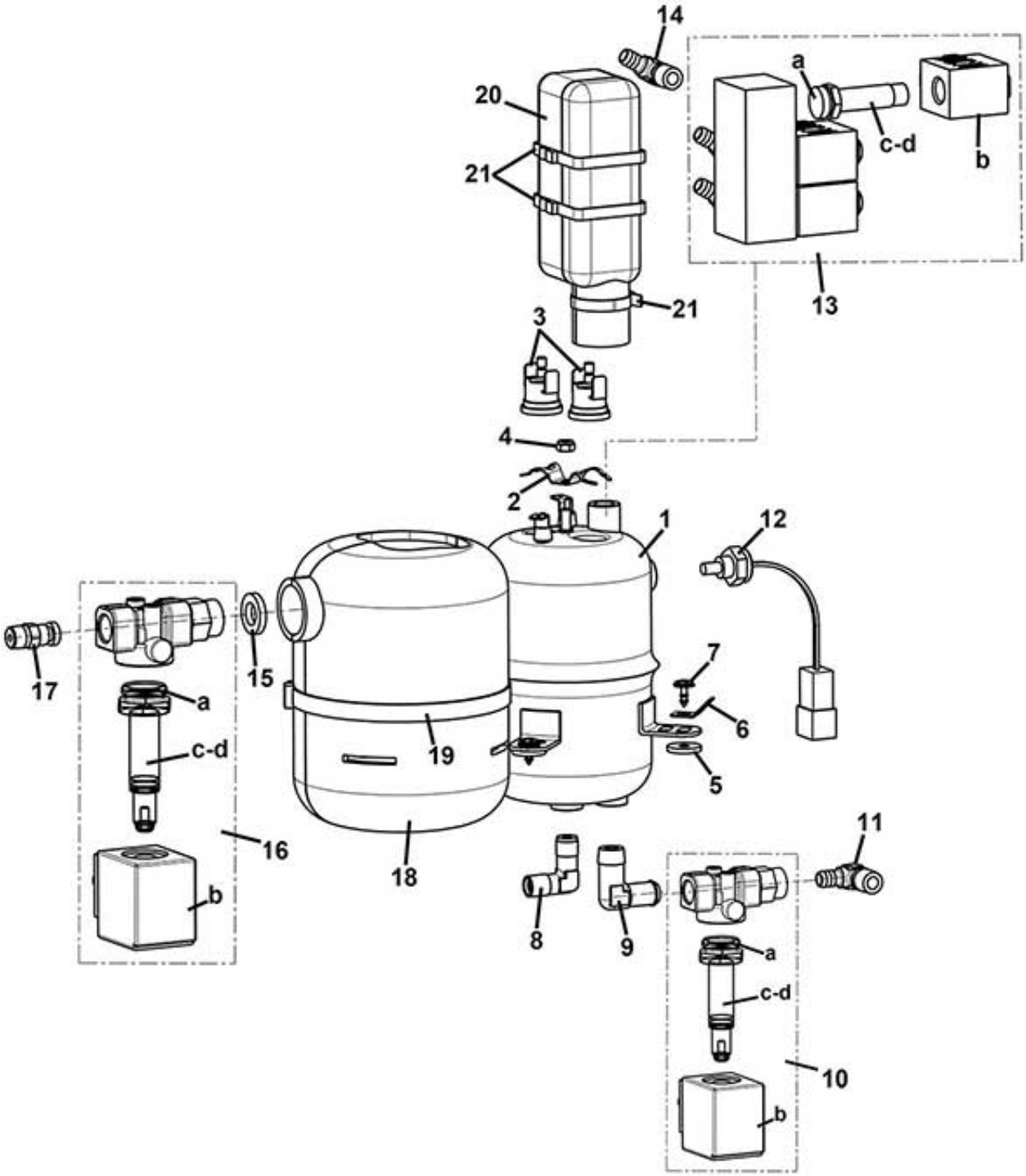

www.rheavendors.com tel: 0039 02 966 551 fax: 0039 02 96 55 086 email: rheavendors@rheavendors.com exclusive property of rheavendors group

express coffee group boiler		
Pos.	**Code**	**Description**
1/a	Z0600019703CL	§ PRESS.BOIL.800CC 2000W 230V From pos.1 to pos. 4
1/b	Z0600019706CL	§BOILER INOX 800CC 120VUL1500W From pos.1 to pos. 4
2	Z0600019188	THERMOSTAT CLIP
3	ELE0000982	CLIXSON 127°
4	VIT0004826	NUT M4X0,7
5	1600001098	RUBBER SPACER D. 4,5
6	Z0600019012	GROUND WIRING
7	VIT0002401	SCREW ST HEAD CAP M3.5X9.5
8	Z0100001109	ELBOW CONNECTOR 6-1/8+OR
9	Z0100001110	ELBOW CONNECTOR 6-1/8
10	Z0110001126	VALVE 2W 1/8 24V DC 6W
10/a	Z0110010150	SLEEVE
10/b	Z0110010145	COIL 6W 24V DC 70%
10/c-d		PARTS NO MORE AVAILABLE
11	Z0100001102	CONNECTOR 1/8"-Ø7,2 90°
12	ELE0000975	PROBE
13	Z0110001125	VALVE BLOCK 3-2W 24V DC 6W
13/a	Z0110010150	SLEEVE
13/b	Z0110010145	COIL 6W 24V DC 70%
13/c-d		PARTS NO MORE AVAILABLE
14	Z0100001112	RUBBER HOLDER
15	VIT0003513	WASHER 18X10X3
16	Z0110001072	VALVE 3W 1/8 24DC O
16/a		
16/b	Z0110010065	COIL 8 W 24 DC
16/c-d		COMPONENT NO MORE SELLING
17	Z0100001111	CONNECTOR 4-1/8+OR
18	Z0600019198	800CC BOILER HOUSING INSULAT.
19	FASC000214	PLASTIC CLIP BLACK 7,8X365
20	Z0600019199	EV HOUSING INSULATION
21	FASC000215	PLASTIC CLIP BLACK 2,6X200
100	Z0600019750CL	§ PRESS.BOIL.800CC 2000W 230V
101	Z0600019751CL	§ INOX BOILER 800 3+1EV 120V

www.rheavendors.com tel: 0039 02 966 551 fax: 0039 02 96 55 086 email: rheavendors@rheavendors.com exclusive property of rheavendors group

2 MIXERS SUPPORT ASSEMBLY

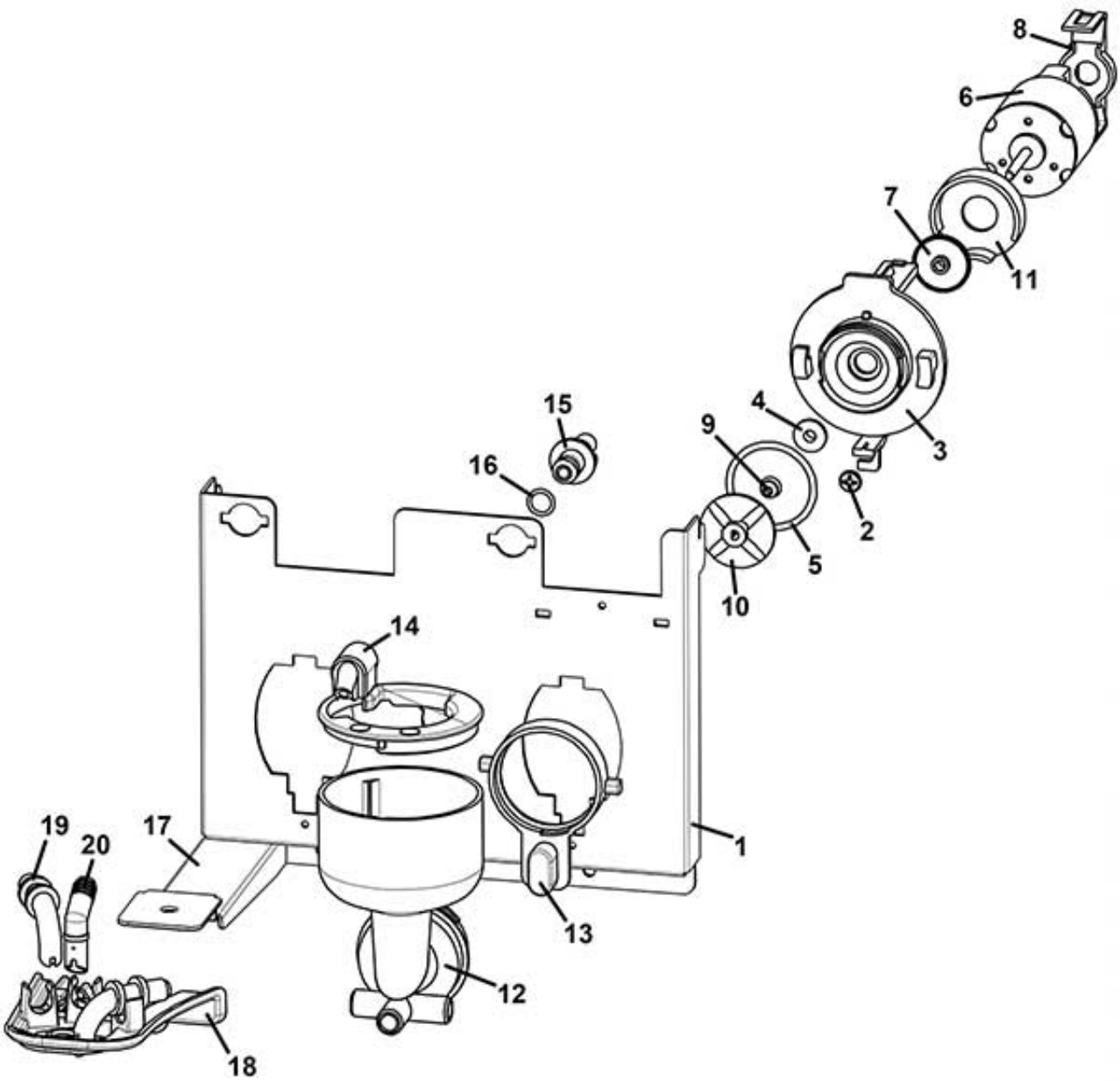

www.rheavendors.com tel: 0039 02 966 551 fax: 0039 02 96 55 086 email: rheavendors@rheavendors.com exclusive property of rheavendors group

2 MIXERS SUPPORT ASSEMBLY		
Pos.	**Code**	**Description**
1	Z0080200012NA	MIXER PLATE
2	VIT0002401	SCREW ST HEAD CAP M3.5X9.5
3	Z0080100005	MOTOR MIXER BASE
4	Z0080100015	MIXER BUSH
5	GUA0000084	OR 3131 RED SILICONE A60
6	Z0090003023	MIXER MOTOR 24V DC SHAFT D.4
7	Z0080100024	MIXER FAN
8	Z0080100009IC	MIXER MOTOR SUPPORT RAL2011
9	Z0080100102	MIXER SHAFT GASKET
10	Z0080100011	MIXER FAN
11	Z0080100023IC	MIXER COVER RAL2011
12/a	Z0080200110L	MIXING BOWL L.W/H20 BREAKER
12/b	Z0080200111R	MIXING BOWL R.W/H20 BREAKER
12/c	Z0080200112C	MIXING BOWL F.W/H20 BREAKER
13	Z0080100006IC	LOCK RING RAL2011
14	Z0080100080	MIXER RING W/PIPE X2,5 GREY
15	Z0080100043	MIXER CONNECTOR BLACK
16	GUA0000085	OR 106 RED SILICONE A70
17	Z0080200014NA	HOSES SUPPORT
18	Z0020039552	NOZZLES HOLDER (BLACK)
19	Z0010020052	PRODUCT NOZZLE
20	Z0020039533	SPOUT DELIVERY 30° D.6
100	Z0080100001R	§ MIXER BOWL BASE+MOTOR From pos.3 to pos. 11
101	Z0080200010R	§ 2 MIXER SUPPORT

www.rheavendors.com tel: 0039 02 966 551 fax: 0039 02 96 55 086 email: rheavendors@rheavendors.com exclusive property of rheavendors group

water inlet panel

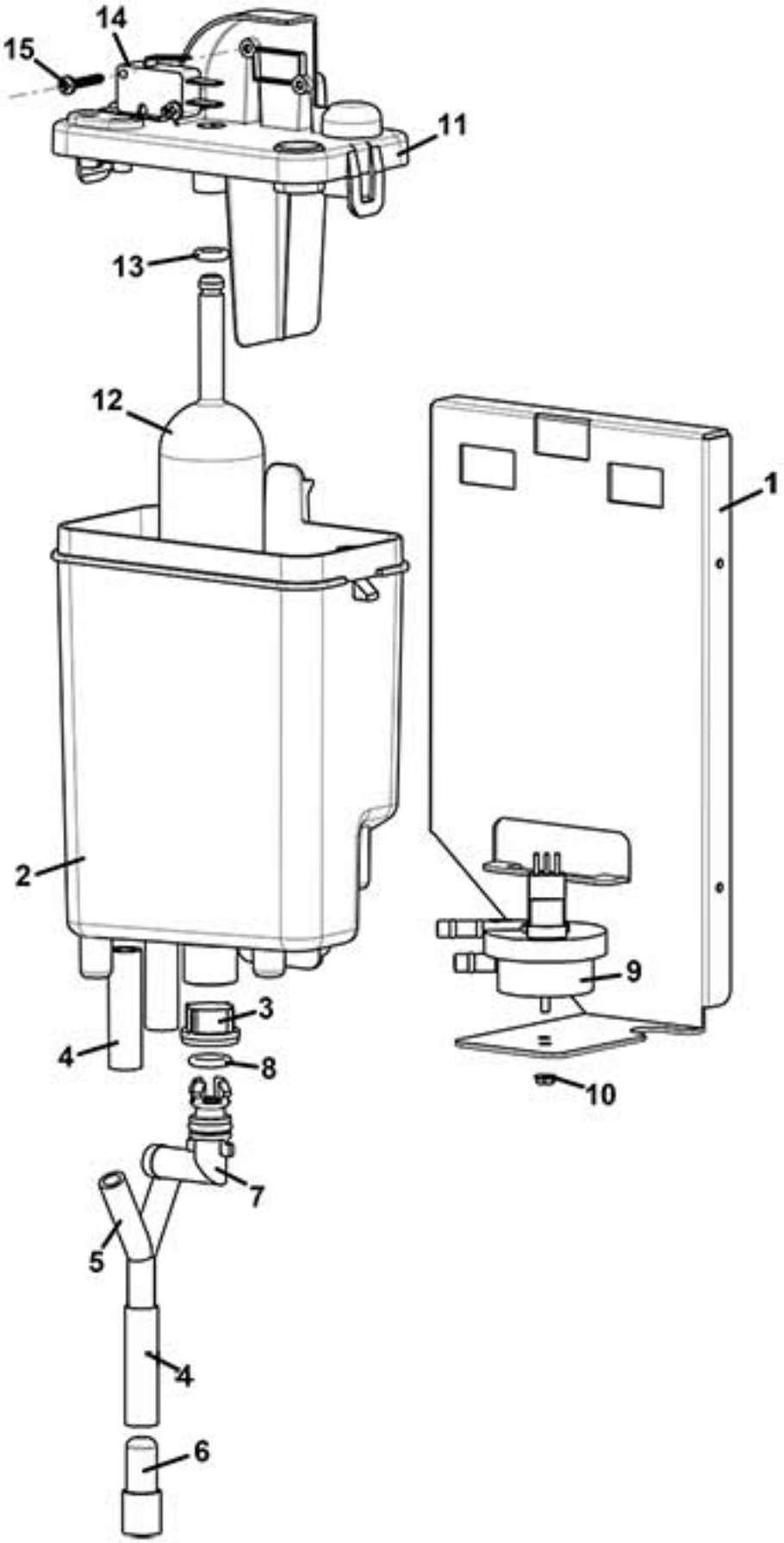

www.rheavendors.com tel: 0039 02 966 551 fax: 0039 02 96 55 086 email: rheavendors@rheavendors.com exclusive property of rheavendors group

water inlet panel		
Pos.	**Code**	**Description**
1/a	Z0010027244-05	AIR BREAK HOLDER BRACKET
1/b	Z0010028248-06	HYDRAULIC HOLDER
2	Z0800013041	AIR BREAK TANK
3	Z0110020007	PLASTIC FILTER DIAM. 20
4/a	TSIL07/11T-10	SILICON HOSE 7X11 MT.10
4/b	TSIL07/11T-50	SILICON HOSE 7X11 MT.50
5	Z0100001065	CONNECTOR "Y"
6	650001057	DRAINER PLUG
7	Z0800009211	ELBOW CONNECTOR
8	GUA0000043	OR 109 NBR AL 75 BLACK
9	Z0110007003	VOLUMETRIC COUNTER
10	VIT0004701	NUT M3
11	Z0800013043	AIR BREAK COVER
12	Z0800013046	AIR BREAK WASTE FLOAT
13	GUA0000082	SILICON GASKET D.6
14	ELE0001514	MICROSWITCH 3A 125-250VA
15	VIT0002013	SCREW ST HEAD CAP M2.9X19

www.rheavendors.com tel: 0039 02 966 551 fax: 0039 02 96 55 086 email: rheavendors@rheavendors.com exclusive property of rheavendors group

GRINDER

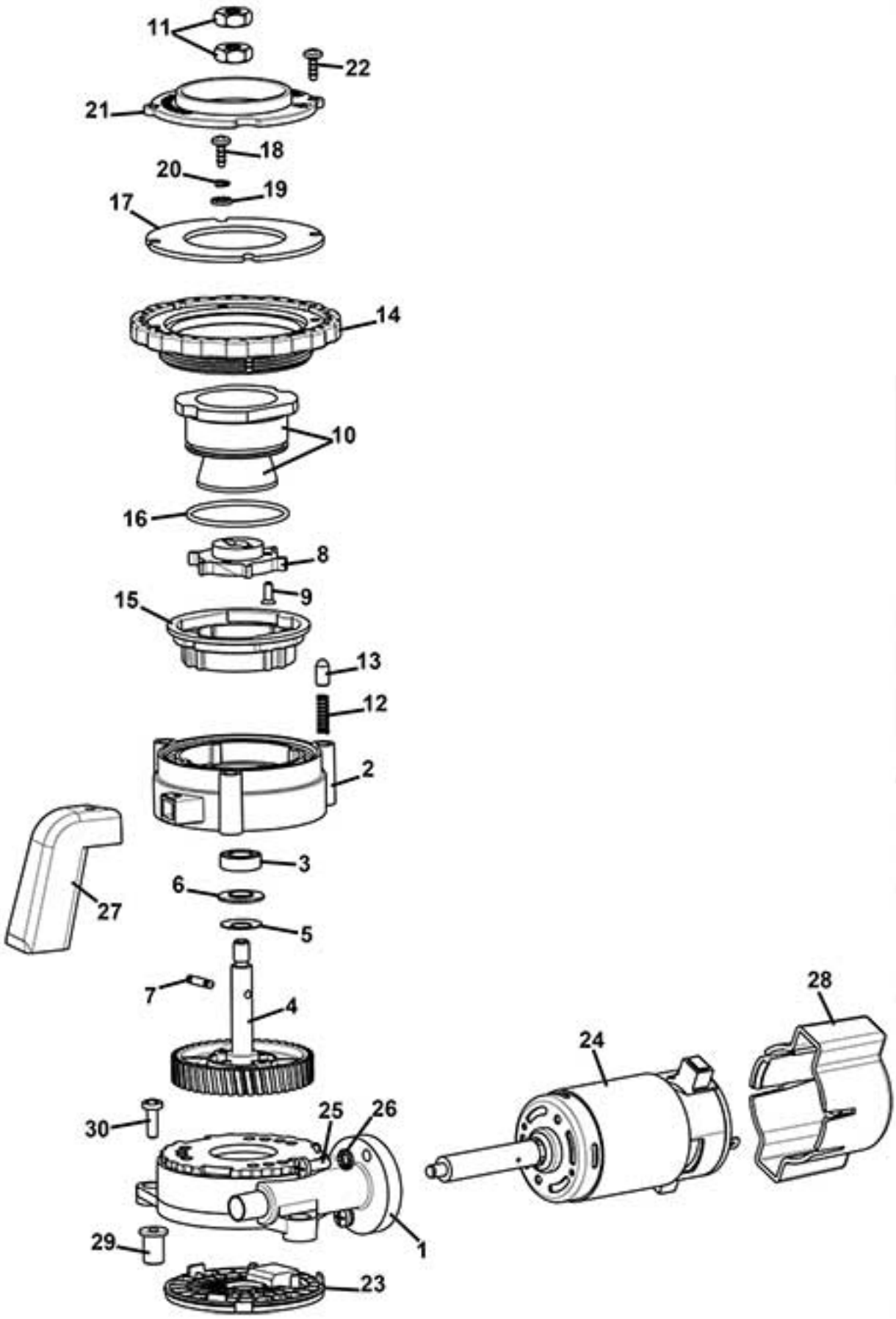

www.rheavendors.com tel: 0039 02 966 551 fax: 0039 02 96 55 086 email: rheavendors@rheavendors.com exclusive property of rheavendors group

GRINDER		
Pos.	**Code**	**Description**
1	Z0320001639NAR	§ MOTOR SUPPORT BLACK+PLUG
2	Z0320001602NAR	GRINDER BLADES SUPPORT
3	VIT0009325	BEARING
4	Z0320001608R	§ WHEEL+SHAFT+MAGNETS
5	Z0320001629	CUP SPRING 16x8,2 SP. 0,4
6	Z0320001625	BUSH
7	Z0320001704	GRINDER ROTATION PIN REINFORCE
8	Z0320001636	EJECTOR
9	VIT0000121	SCREW COUNT FLAT HEAD M3X8
10/a		Not more sold. Substituted from pos. 10/b
10	Z0320001680	CONIC BLADES PLUS
11	Z0320001642	LOWER GRINDER FIXING NUT
12	Z0320001643	SPRING D.4X15X0,6
13	Z0320001624	REGULATION PIN
14	Z0320001605NAR	§ REGULATION RING NUT BLACK
15	Z0320001635-03NA	GRINDER SUPPORT BLACK
16	GUA0000124	SILICONE OR 2137
17	Z0320001622	UPPER GRINDER FIXING
18	VIT0002469	SCREW HEAD TAP M3.5X10
19	Z0320001666	SPACER D.4x7x2
20	VIT0003103	SPRING WASHER 4,3
21	Z0320001607NA	DUCT BLACK
22	VIT0002010	SCREW ST HEAD CAP M3.5X9.5
23	Z0320001604NA	PLUG BLACK
24/a	Z0090003047	GRINDER MOTOR 230V DC
24/b	Z0090002237	GRINDER MOTOR 200V
24/c	Z0090003048	GRINDER MOTOR 120V
25	VIT0000013	SCREW HEAD TAP CAP M4X12
26	VIT0003103	SPRING WASHER 4,3
27	Z0320004736-04	GRINDER CHUTE R.2011
28	Z0320001615NA	GRINDER SENSOR COVER BLACK
29	Z0320001628	NO-VIBRATION BUSH
30	VIT0000012	SCREW HEAD TAP CAP M4X10
100	Z0320001601CL3AL	§GRINDER VRFX 15° BREWER PLUS From pos.1 to pos. 28
101	Z0320001601CL3CAL	§GRINDER VRFX 15° PREGR.PLUS From pos.1 to pos. 28
102	Z0320001601CL9C	§GRINDER VFX15°200V PREGR.PLUS From pos.1 to pos. 28

www.rheavendors.com tel: 0039 02 966 551 fax: 0039 02 96 55 086 email: rheavendors@rheavendors.com exclusive property of rheavendors group

PRO BREWER SUPPORT+MOTOR

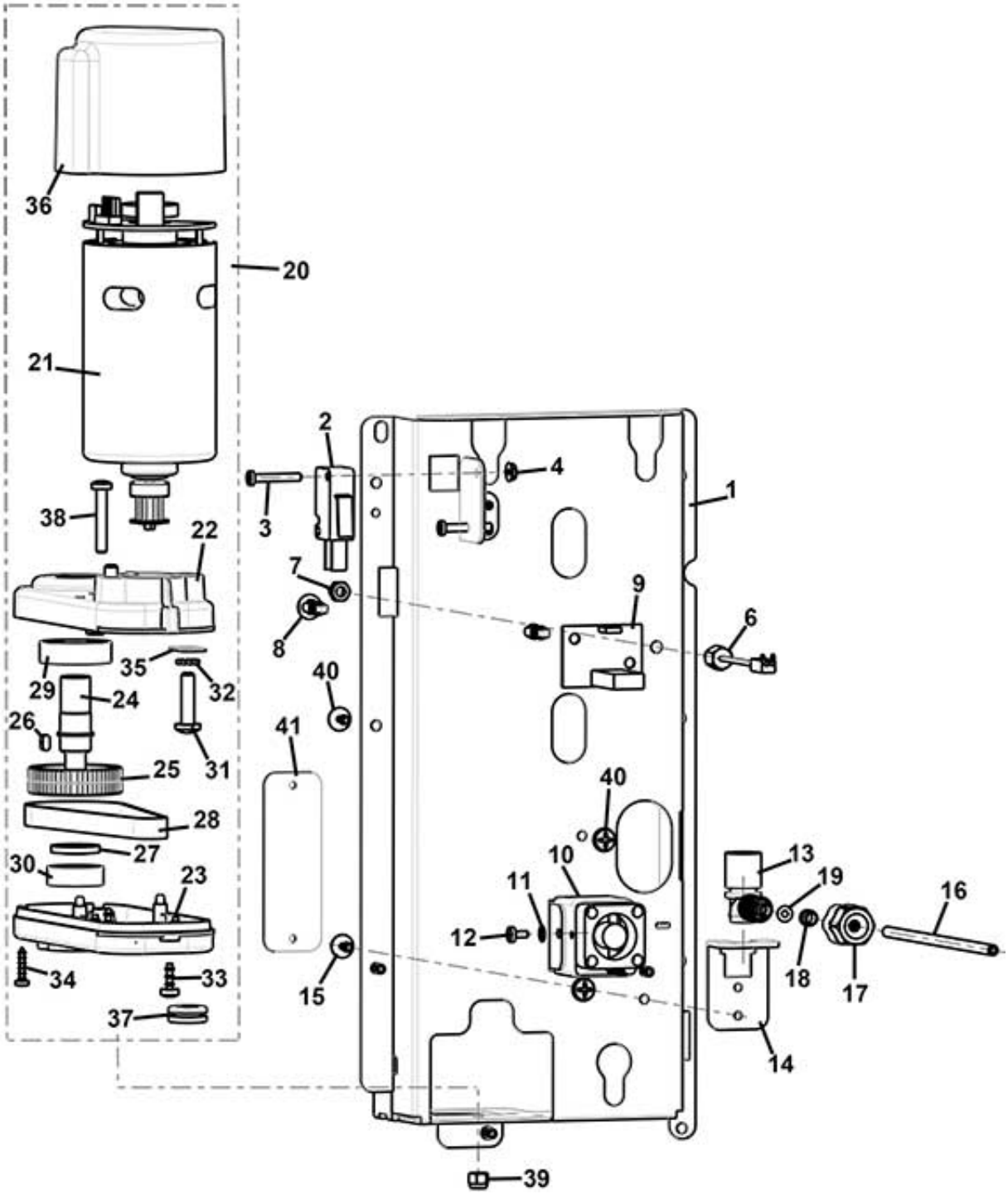

www.rheavendors.com tel: 0039 02 966 551 fax: 0039 02 96 55 086 email: rheavendors@rheavendors.com exclusive property of rheavendors group

PRO BREWER SUPPORT+MOTOR		
Pos.	**Code**	**Description**
1	Z0260014002	VARIFLEX BREWER SUPPORT
2	ELE0001522	MICROSWITCH
3	VIT0000006	SCREW HEAD TAP CAP M3X16
4	VIT0004701	NUT M3
6	ELE0000931	PROBE NTC 10K/TE
7	VIT0004816	NUT M4
8	ELE0062020	BOARD SUPPORT
9		Heater board sold with code ELE0000467-02
10	ELE0000467-02	FAN HEATER 24V DC + BOARD
11	VIT0003102	SPRING WASHER 3,2
12	VIT0000002	SCREW HEAD TAP CAP M3X6
13	Z0250014084-02	FEMALE CONNECTOR
14	Z0260014009-01	H2O CONNECTOR SUPPORT
15	VIT0002009	SCREW ST HEAD CAP M3.5X6.5
16	TTEF02/04T	PTFE PIPE 2X4
17	Z0250014086	NUT
18	Z0100002014	LOCKING RING SO1-4
19	GUA0000061	OR 2010 VITON 80 BLACK
20	Z0090002250R	§ VARIFLEX BREW. GEARBOX MOTOR From pos. 21 to pos. 37 (new version components)
21	Z0090002252-01	§ MOTOR 24V DC
22	Z0090002222NA	MOTOR UPPER CASE RAL9005
23	Z0090002223NA	MOTOR LOWER CASE RAL9005
24	Z0090002224	FEMALE CONNECTOR SHAFT
25	Z0090002255AN	PULLEY
26	VIT0006703	CLAMP
27	Z0090002226	SPACER
28	Z0090002258	BELT
29	VIT0009324	BEARING
30	VIT0009320	BEARING
31	VIT0000017	SCREW HEAD TAP CAP M5X20
32	VIT0003104	SPRING WASHER 5,3
33	VIT0002469	SCREW HEAD TAP M3.5X10
34	VIT0002014	SCREW ST HEAD CAP M2.9X13
35	Z0090002240	MOTOR SPACER
36	Z0090002235CK	MR GV BOARD COVER R.7037
37	GUA0010501	ELECTRICAL GROMMET DG 7,5
38	VIT0000015	SCREW HEAD TAP CAP M4X25
39	VIT0004815	NUT M4
40	VIT0002401	SCREW ST HEAD CAP M3.5X9.5
41		PARTS NO MORE AVAILABLE
100	Z0250014086R	§ WATER INLET TUBE 0,15 mt From pos. 16 to pos. 19
101	Z0090002224R	§ FEMALE CONNECTOR SHAFT From pos.24 to pos.30 excluded pos.28

www.rheavendors.com tel: 0039 02 966 551 fax: 0039 02 96 55 086 email: rheavendors@rheavendors.com exclusive property of rheavendors group

PROFESSIONAL BREWER GROUP D.45

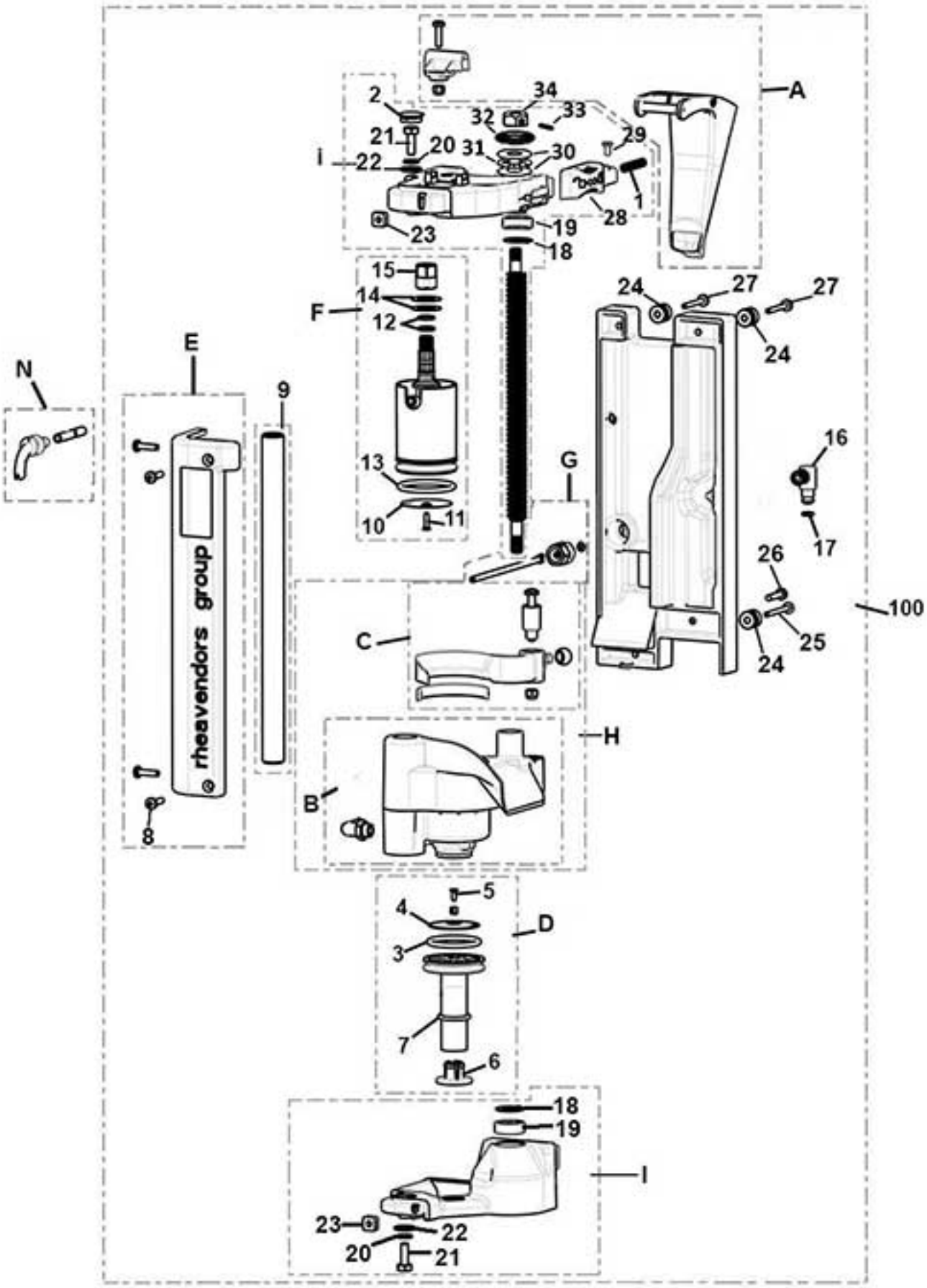

www.rheavendors.com tel: 0039 02 966 551 fax: 0039 02 96 55 086 email: rheavendors@rheavendors.com exclusive property of rheavendors group

PROFESSIONAL BREWER GROUP D.45		
Pos.	**Code**	**Description**
A	Z0250014008R	§ CHUTE D. 45
1	Z0250014081	SPRING
2	GUA0011022	PLUG
B	Z0250014022R	§ INFUSION CHAMBER D.45 included internal components and elbow
C	Z0250014024R	§ BRUSH D.45
D	Z0250014028R	§ LOWER FILTER HOLDER D.45
3	GUA0000097	OR 4131 RED SILICONE LSR70
4	Z0250014029	COFFEE FILTER DIAM. 37.3
5	VIT0000121	SCREW COUNT FLAT HEAD M3X8
6	Z0250014027R1	LOWER PISTON LOCK+SET SCREW
7	GUA0000103	OR 3075 SILICON
E	Z0250014019R	§ FRONTAL COVER
8	VIT0001009	SCREW HEAD TAP CAP M4X16
9	Z0250014013-04	CYLINDRICAL GUIDE
F	Z0250014045R	§ UPPER FILTER HOLDER D.45
10	Z0250008211	COFFEE FILTER 37,3
11	VIT0000129	SCREW COUNT HEAD M3X12
12	GUA0000045	OR 108 VITON 80 BLACK
13	GUA0000067	OR 4143 RED SILICONE LSR70
14	Z0250014048	SPRING
15	Z0250014086	NUT
16	Z0250014085	MALE CONNECTOR
17	GUA0000004	OR 104 NBR AL 75 BLACK
G	Z0250014086R	§ WATER INLET TUBE 0,15 mt
H	Z0250014020R	§ INFUSION CHAMBER D.45
I	Z0250014005R2	§UPPER SUPPORT WITHOUT CHUTE
L	Z0250014012R	§ LOWER SUPPORT
18	Z0250014077	SPACER
19	VIT0009320	BEARING
20	VIT0003113	SPRING WASHER 6,4
21	VIT0000249	SCREW HEX HEAD M6X16
22	Z0250014079	WASHER D.15 D.6,5 SP.1,5
23	VIT0009112	NUT M4
24	Z0250014072	PIN
25	VIT0000033	SCREW HEAD TAP CAP M4X35
26	VIT0001011	SCREW HEAD TAP CAP M4X20
27	VIT0001006	SCREW HEAD TAP CAP M4X30
28	Z0250014082	BREWER STOPPER BUTTON
29	VIT0002009	SCREW ST HEAD CAP M3.5X6.5
30	VIT0009318	SPACER WASHER
31	VIT0009317	BEARING
32	GUA0001007	V RING GASKET VA16
33	VIT0007011	SET SCREW 4X4
34	Z0250014071	NUT M8
N	Z0020039539R	§ SPOUT DELIVERY D.4
100	Z0250014000CL	COFFEE BREWER VARIFLEX D 45

www.rheavendors.com tel: 0039 02 966 551 fax: 0039 02 96 55 086 email: rheavendors@rheavendors.com exclusive property of rheavendors group

PROFESSIONAL BREWER GROUP D.36

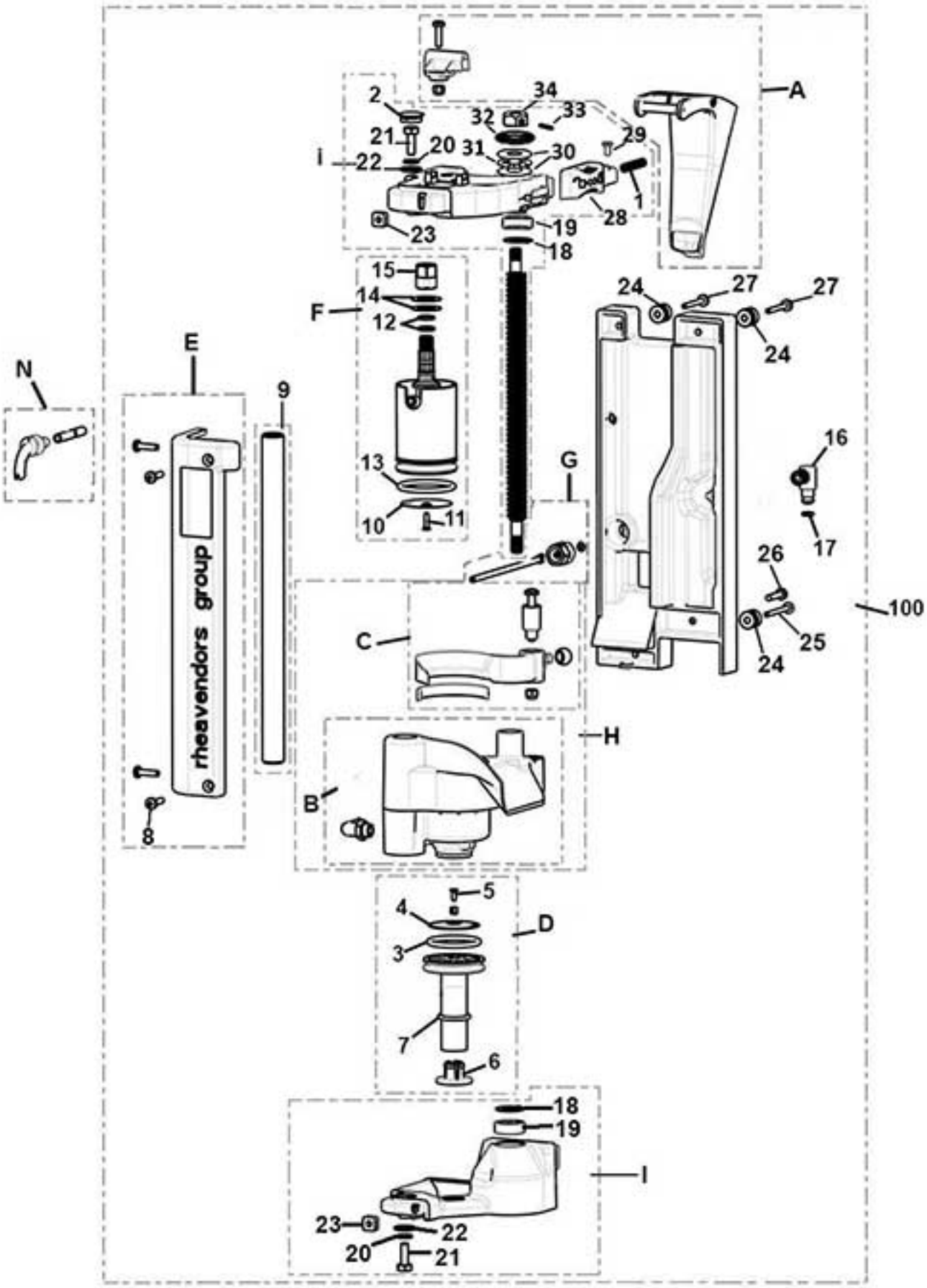

www.rheavendors.com tel: 0039 02 966 551 fax: 0039 02 96 55 086 email: rheavendors@rheavendors.com exclusive property of rheavendors group

PROFESSIONAL BREWER GROUP D.36		
Pos.	**Code**	**Description**
A	Z0250014033R	§ CHUTE D. 36
1	Z0250014081	SPRING
2	GUA0011022	PLUG
B	Z0250014032R	§ INFUSION CHAMBER D.36 included internal components and elbow
C	Z0250014034R	§ BRUSH D.36
D	Z0250014038R	§ LOWER FILTER HOLDER D.36
3	GUA0000080	OR 4112 RED SILICONE LSR70
4	Z0250008019	COFFEE FILTER
5	VIT0000121	SCREW COUNT FLAT HEAD M3X8
6	Z0250014027R1	LOWER PISTON LOCK+SET SCREW
7	GUA0000103	OR 3075 SILICON
E	Z0250014019R	§ FRONTAL COVER
8	VIT0001009	SCREW HEAD TAP CAP M4X16
9	Z0250014013	
F	Z0250014040R	§ UPPER FILTER HOLDER D.36
10	Z0250008099	COFFEE FILTER 33,4
11	VIT0000129	SCREW COUNT HEAD M3X12
12	GUA0000045	OR 108 VITON 80 BLACK
13	GUA0000080	OR 4112 RED SILICONE LSR70
14	Z0250014048	SPRING
15	Z0250014086	NUT
16	Z0250014085	MALE CONNECTOR
17	GUA0000004	OR 104 NBR AL 75 BLACK
G	Z0250014086R	§ WATER INLET TUBE 0,15 mt
H	Z0250014030R	§ CHAMBER D.36
I	Z0250014005R2	§UPPER SUPPORT WITHOUT CHUTE
L	Z0250014012R	§ LOWER SUPPORT
18	Z0250014077	SPACER
19	VIT0009320	BEARING
20	VIT0003113	SPRING WASHER 6,4
21	VIT0000249	SCREW HEX HEAD M6X16
22	Z0250014079	WASHER D.15 D.6,5 SP.1,5
23	VIT0009112	NUT M4
24	Z0250014072	PIN
25	VIT0000033	SCREW HEAD TAP CAP M4X35
26	VIT0001011	SCREW HEAD TAP CAP M4X20
27	VIT0001006	SCREW HEAD TAP CAP M4X30
28	Z0250014082	BREWER STOPPER BUTTON
29	VIT0002009	SCREW ST HEAD CAP M3.5X6.5
30	VIT0009318	SPACER WASHER
31	VIT0009317	BEARING
32	GUA0001007	V RING GASKET VA16
33	VIT0007011	SET SCREW 4X4
34	Z0250014071	NUT M8
N	Z0020039539R	§ SPOUT DELIVERY D.4
100	Z0250014060CL	§ COFFEE BREWER VARIFLEX D.36

www.rheavendors.com tel: 0039 02 966 551 fax: 0039 02 96 55 086 email: rheavendors@rheavendors.com exclusive property of rheavendors group

products container

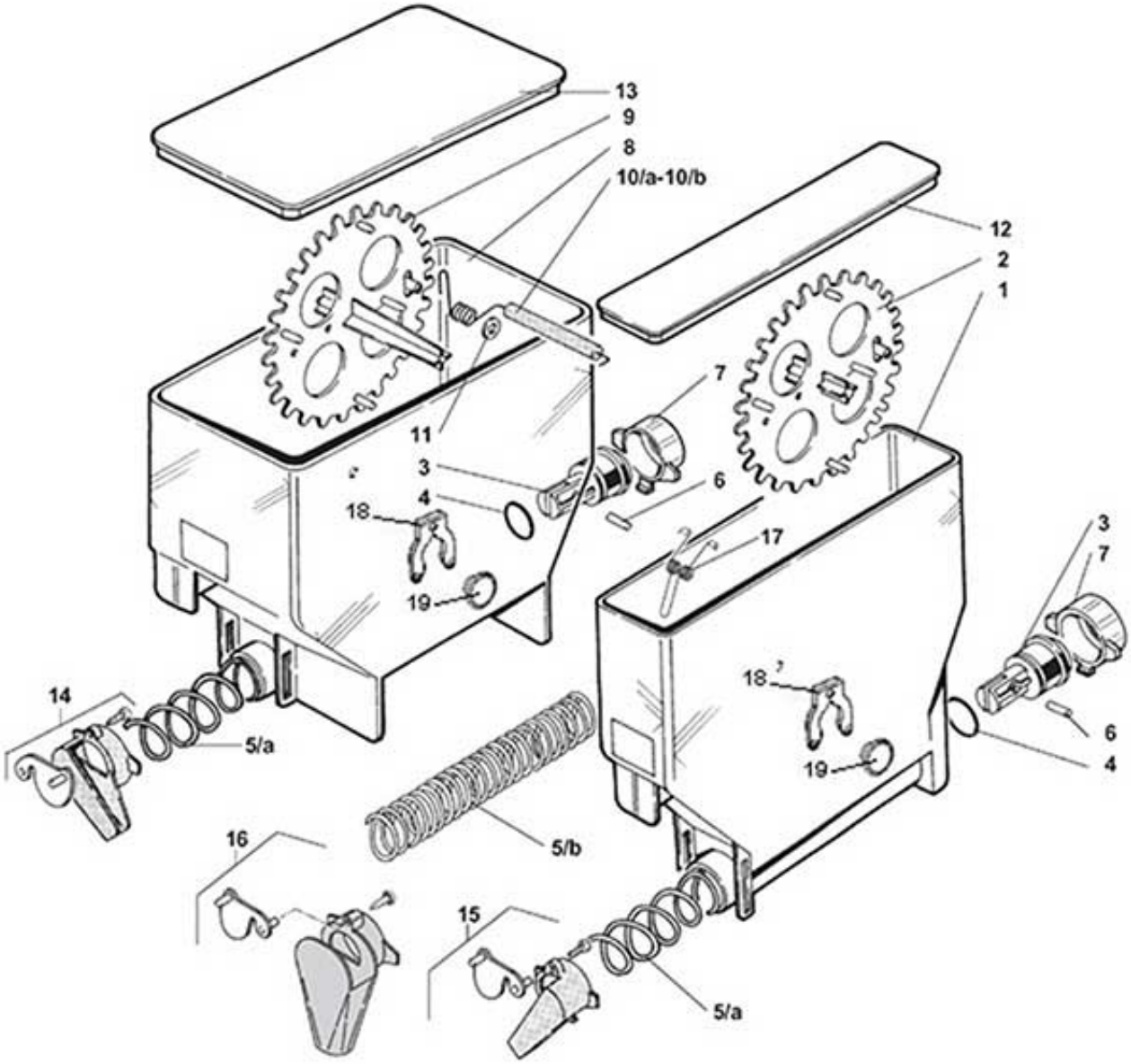

www.rheavendors.com tel: 0039 02 966 551 fax: 0039 02 96 55 086 email: rheavendors@rheavendors.com exclusive property of rheavendors group

products container		
Pos.	**Code**	**Description**
1	Z0230030500	INGREDIENT CANISTER 54 190
2	Z0230030236AB	§ WHEEL MM54
3	Z0230030012	SPIRAL PIN
4	GUA0000083	OR 123 RED SILICONE A70
5/a	Z0230030014	SPIRAL 18
5/b	Z0230030013	SPIRAL 9
6	VIT0005106	PIN 2X14
7	Z0230030011	REAR BUSH
8	Z0230030520	INGREDIENT CANISTER 110-190
9	Z0230030237AB	§ WHEEL MM110
10/a	Z0230030064	AGITATOR 112 - RIGHT OUTLET
10/b	Z0230030062	AGITATOR 112 - LEFT OUTLET
11	VIT0003210	WASHER 8,4X16X1,6
12	Z0230030156	CANISTER 54 LID
13	Z0230030158	CANISTER 110 LID
14/a	Z0230030058R	§ INGRED. CHUTE-RIGHT ORANGE
14/b	Z0230030044R	§ INGREDIENT CHUTE-RIGHT RED
15/a	Z0230030057R	§ INGREDIENT CHUTE-LEFT ORANGE
15/b	Z0230030043R	§ INGREDIENT CHUTE-LEFT RED
16	Z0230030059R	§ INGRED. CHUTE-FRONTALORANGE
17	Z0230030060-05	PRODUCT AGITATOR
18	Z0230030239	WHEEL PIN FORK
19	Z0230030238-02	WHEEL PIN
100	Z0230030522R	§ CAN. 110-190 AGIT.18 W/LID-R
101	Z0230030525R	§ CAN. 110-190 AGIT.18 W/LID-L
102	Z0230030506R	§ CANIS. 54-190 WHEEL18 W/LID
103	Z0230030502R	§ CANIS. 54-190 WHEEL9 W/LID

www.rheavendors.com tel: 0039 02 966 551 fax: 0039 02 96 55 086 email: rheavendors@rheavendors.com exclusive property of rheavendors group

coffee beans container

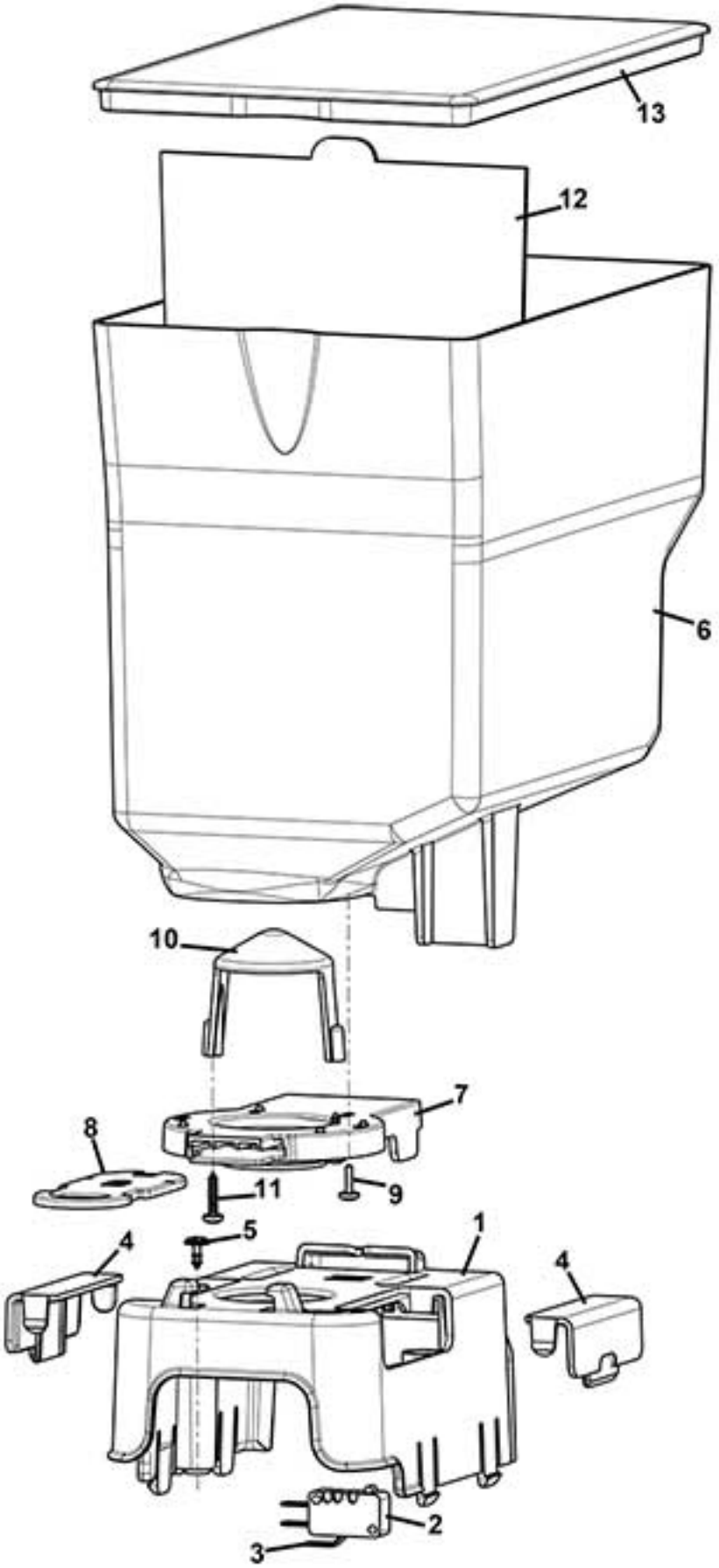

www.rheavendors.com tel: 0039 02 966 551 fax: 0039 02 96 55 086 email: rheavendors@rheavendors.com exclusive property of rheavendors group

coffee beans container		
Pos.	**Code**	**Description**
1	Z0230015738-03	GRINDER COVER
2	ELE0001522CL	§ MICROSWITCH + LEVER + FASTON
3	ELE0001911	MICROSWITCH LEVER
4	Z0230015229-02	REGULATION COVER
5	VIT0002401	SCREW ST HEAD CAP M3.5X9.5
6/a	Z0230015251-02TR	§COFFEE CONTAINER W/GUIDE 2KG.
6/b	Z0230015253-02TR	COFFEE CONTAINER W/O GUIDE 2KG
7	Z0230015231-02	COFFEE BEANS HOPPER ADAPTOR
8	Z0230015224IC	COFFEE BEANS HOPPER STOPPER
9	VIT0002479	SCREW HEAD TAP 3,5X12
10	Z0230015227TR	GRINDER COVER
11	VIT0002114	SCREW COUNT FLAT HEAD M3.5X16
12	Z0230015254TR	COFFEE BEANS CONT.BULKHEAD
13	Z0230015252-02TR	COFFEE CONTAINER COVER 2 KG.
100	Z0230015250CL-02	§COFFEE CONTAINER W/DIV 2KG. From pos. 6 to pos. 13 (excluded pos.6/b)
101	Z0230015250CL1-01	§ COFFEE BEANS HOPPER W/O SPLI From pos. 6 to pos. 13 (excluded pos.6/a+12)

www.rheavendors.com tel: 0039 02 966 551 fax: 0039 02 96 55 086 email: rheavendors@rheavendors.com exclusive property of rheavendors group

OPTIONAL KIT

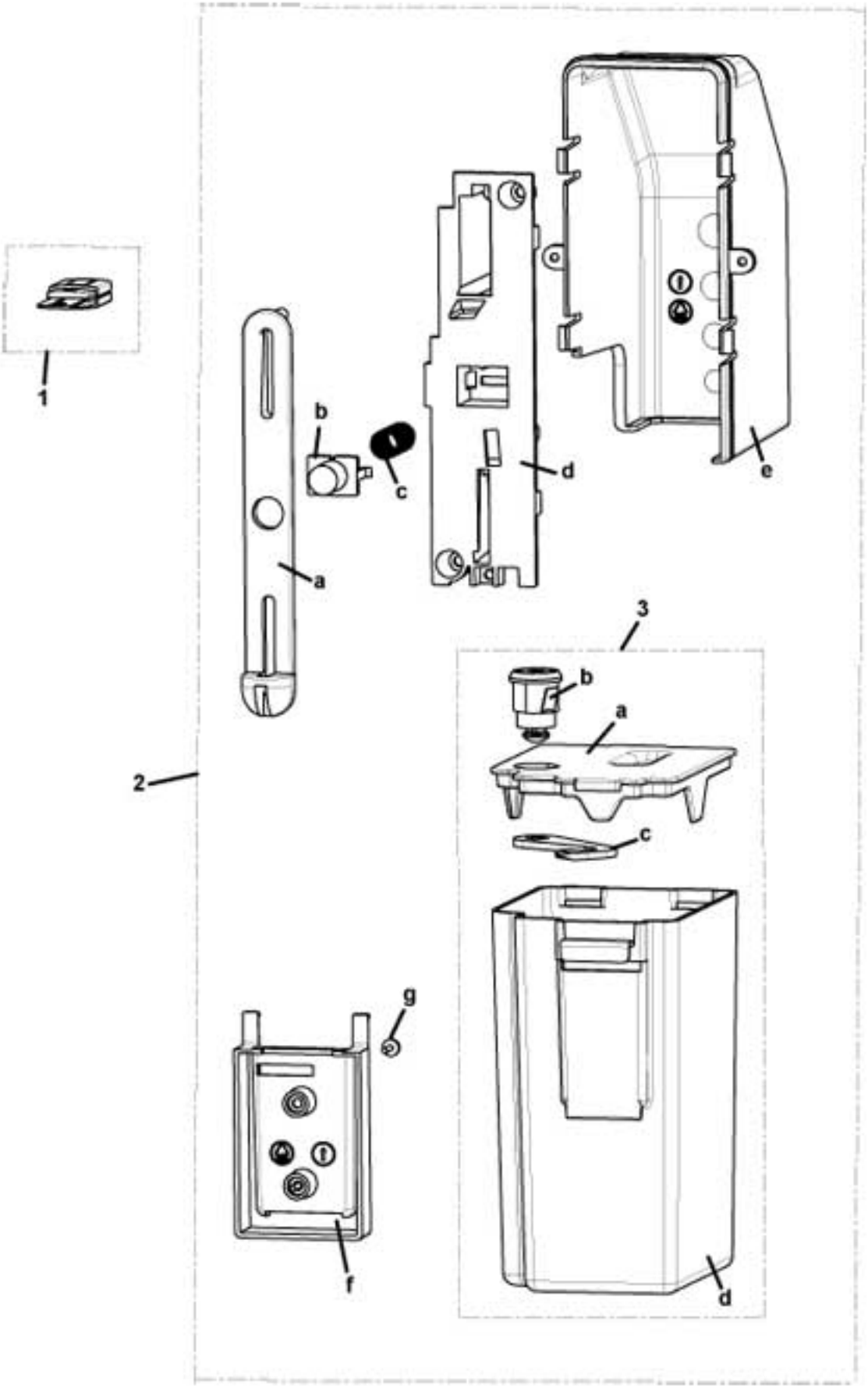

www.rheavendors.com tel: 0039 02 966 551 fax: 0039 02 96 55 086 email: rheavendors@rheavendors.com exclusive property of rheavendors group

OPTIONAL KIT		
Pos.	**Code**	**Description**
1	Z0020040310CL/2	RHEA FLASH MEMORY(RED)
2_1	D2109600A0000	KIT W/FIT W/O MECH RAL9005
2_2	D2109600A1000	KIT W/FIT W/O MECH RAL9006
2_1/a	Z0020035031NA	COIN ENTRY PLATE BLACK
2_2/a	Z0020035031CM	COIN ENTRY PLATE RAL9006
2/b	Z0020035033CM	COIN RETURN BUTTON RAL9006
2/c	Z0020035034	COIN RETURN BUTTON SPRING
2/d	Z0020035032NA	PAYM SYSTEM SUPPORT
2/e	Z0020039510NA	PAY. SYSTEM COVER BLACK
2/f	Z0020039528NA	COIN BOX SUPPORT
2/g	VIT0002469	SCREW HEAD TAP M3.5X10
3	Z0020039525R	§ COIN BOX
3/a	Z0020039527NA	COINS BOX LID BLACK
3/b	SER0000015	LOCK MM20 C.3430
3/c	Z0020037128	COIN BOX HOOK
3/d	Z0020039526NA	COIN BOX RAL 9005

www.rheavendors.com tel: 0039 02 966 551 fax: 0039 02 96 55 086 email: rheavendors@rheavendors.com exclusive property of rheavendors group

WIRINGS

www.rheavendors.com tel: 0039 02 966 551 fax: 0039 02 96 55 086 email: rheavendors@rheavendors.com exclusive property of rheavendors group

WIRINGS		
Pos.	**Code**	**Description**
1	CBLXS00261	POWER WIRING 230V
2	CBLXS00266	ACTUATOR WIRING 230V
3	CBLXS00263	GRINDER WIRING
4	CBLXS00256	ACTUATOR WIRING 24V
5	CBLXS00311	SUPPLY DOOR 5/24V WIRING
6	CBLXS00259	BOILER HEATING WIRING
7	CBLXS00267	PUMP WIRING
8	CBLXS00209	DOOR SWITCH WIRING
9	CBLXS00228	LED BOARD WIRING
10	CBLXS00278	POWER SUPPLY WIRING
11	CBLXM00108	LOGO ENLIGHTENMENT WIRING
12	CBLXM00109	LIGHTING LABELS SHORT WIRING
13	CBLXM00110	MED LABELS ENLIGHTING WIRING
14	CBLXM00111	LABELS ENLIGHTENMENT WIRING

www.rheavendors.com tel: 0039 02 966 551 fax: 0039 02 96 55 086 email: rheavendors@rheavendors.com exclusive property of rheavendors group