vending machine

file immagini/ricambi/copertine/rhtt3.pro.jpg NOT exists!!!!!!

spare parts manual

www.rheavendors.com tel: 0039 02 966 551 fax: 0039 02 96 55 086 email: rheavendors@rheavendors.com exclusive property of rheavendors group

cabinet

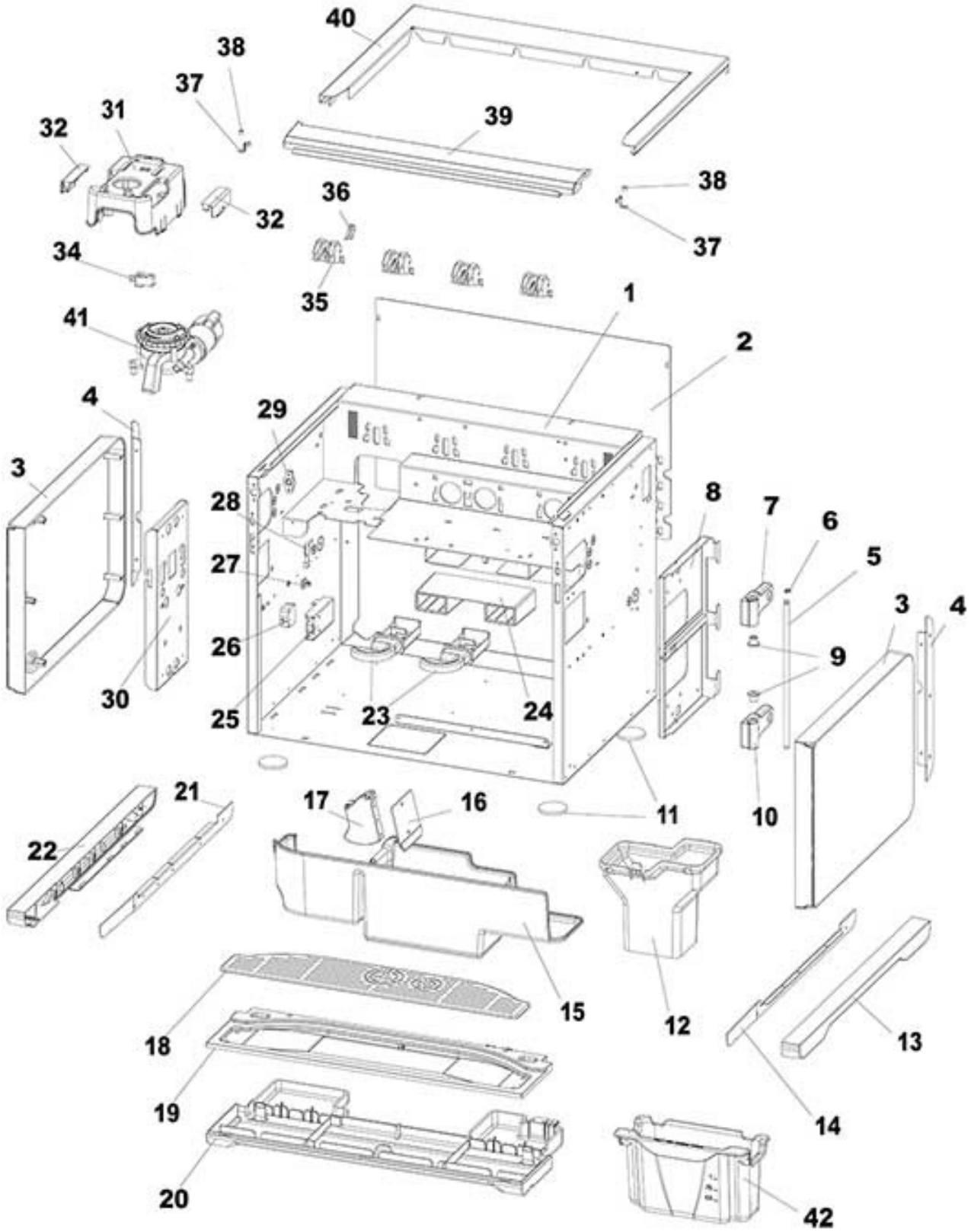

www.rheavendors.com tel: 0039 02 966 551 fax: 0039 02 96 55 086 email: rheavendors@rheavendors.com exclusive property of rheavendors group

cabinet		
Pos.	**Code**	**Description**
1	Z001A115045NA	CABINET STRUCTURE
2	Z001A115022	REAR CABINET
3	Z001A115090CM	SIDE COVER
4	Z001A115095NA	SIDE COVER SUPPORT
5	Z002A115116	HINGE PIN Ø8 h7
6	VIT0006650	RING D8
7	Z002A115132NA	UPPER HINGE WITH BUSHING
8	Z002A115105	DOOR HINGE SUPPORT
9	Z002A115106	SPACER
10	Z002A115130NA	LOWER HINGE
11	Z0010024112	NON-SLIP SURFACE D.43,5X4
12	Z026A115052	GROUNDS CHUTE
13	Z001A115087CM	SIDE COVER DOWN
14	Z001A115088NA	SIDE COVER SUPPORT DOWN RIGHT
15	Z001A115031	GROUNDS CONTAINER
16	Z001A115069	GROUND EXPULSION VANE
17	Z0010024164-02	GROUNDS EJECTOR
18	Z002A115029-03	INOX GRID
19	Z002A115026NA	GRID
20	Z002A115022CL	DRIP TRAY
21	Z001A115086NA	SIDE COVER SUPPORT DOWN LEFT
22	Z001A115085CM	LOWER L.H. LATERAL COVER
23	Z0010027022	TRAP DRAWER REMOVABLE
24	Z0010027037	TRAP DRAWER
25	Z001A115034R	§SWITCH SUPPORT W/ADHESIVE
26	ELE0002019	SWITCH 16A 250V
27	ELE0062253	WIRING CLAMP ADESIVE
28	Z0270011109IC	SERVICE KEY RAL2011
29	Z002A115114NA	DOOR PIN
30	Z002A115109	INTERNAL COVER CABINET
31	Z0230015738-03	GRINDER COVER
32	Z0230015229-02	REGULATION COVER
34	ELE0001522CL	§ MICROSWITCH + LEVER + FASTON
35	Z023A115027NA	MICRO SUPPORT (BLACK)
36	ELE0001537CL	§ SENSOR MICRO
37	Z001A115066-01	UPPER CROSSBAR STOPPING LEVER
38	H00040094	NYLON SPACER 3,7X6,4 H.11
39	Z001A115062NA	UPPER COVER CROSSBAR
40	Z001A115035NA	UPPER COVER
41		See table GRINDER
42	Z002A115040NA	RINSING CICLE CONTAINER
100	Z001A115031CL	§GROUNDS HOPPER Pos.15+16+17

www.rheavendors.com tel: 0039 02 966 551 fax: 0039 02 96 55 086 email: rheavendors@rheavendors.com exclusive property of rheavendors group

rear cabinet

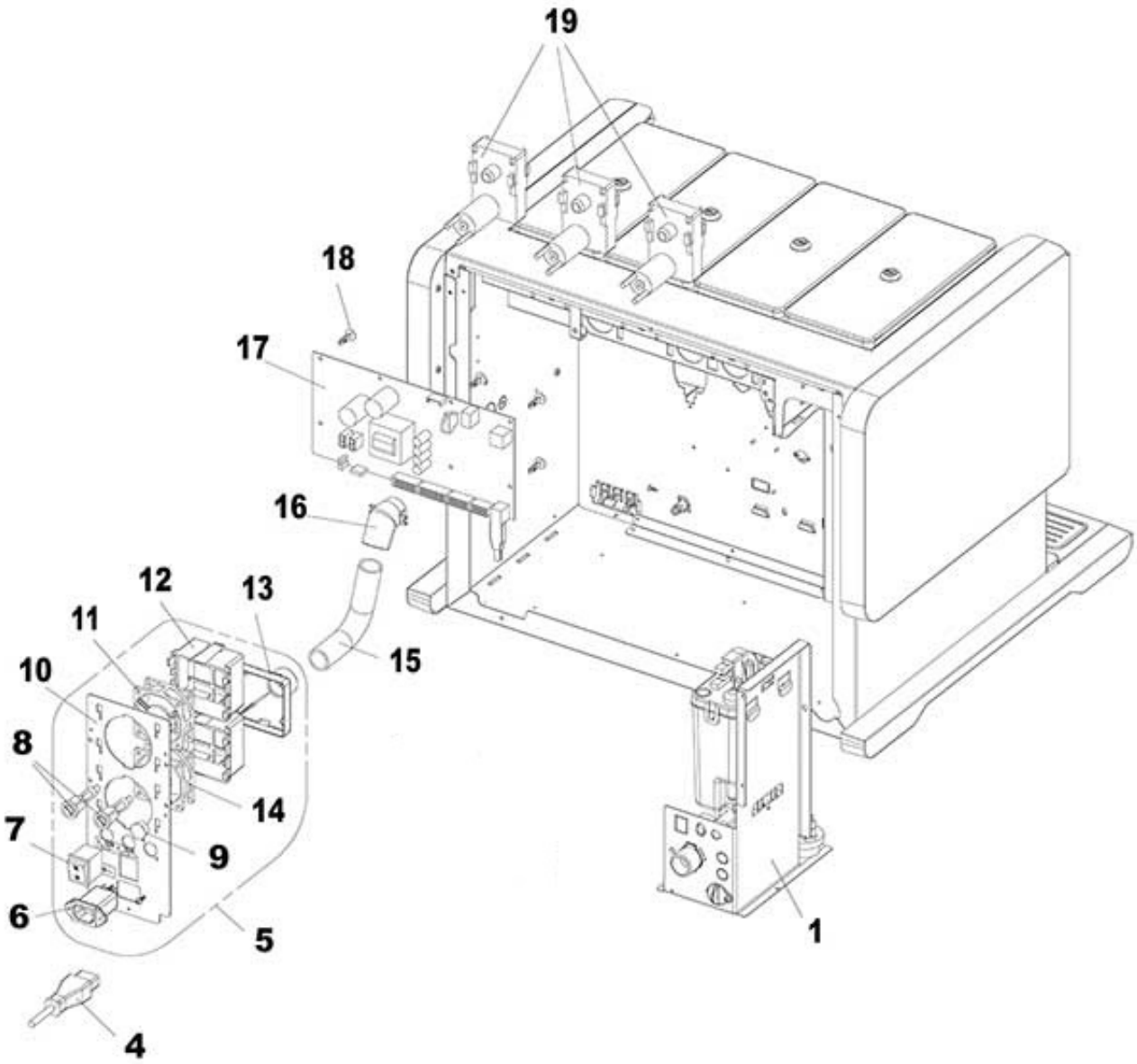

www.rheavendors.com tel: 0039 02 966 551 fax: 0039 02 96 55 086 email: rheavendors@rheavendors.com exclusive property of rheavendors group

rear cabinet		
Pos.	**Code**	**Description**
1		See table water inlet panel
4	ELE0055008	SUPPLY CABLE+PLUG+SCHUK.SOCKET
5	Z013A115000CL	§ CONTROL PANEL 230V
6	ELE0002322	MAINS SOCKET 250V 10A
7	ELE0002014CL3	BIPOLAR SWITCH 15A 250V
8	ELE0003508CL	FUSE HOLDER+FUSE 12A
9	GUA0011010	PLUG
10	Z0130013002	ELECTRIC COMPONENTS SUPPORT
11	ELE0000462	FAN 24V DC-LOW SPEED
12	Z0010027064	FAN SUPPORT
13	Z0010027065	FAN CONNECTOR
14	ELE0000461	FAN 24V DC-HIGH SPEED
15	TEOL000001CL5	EXTRACTOR TUBE D.20 200MM
16	Z0010027043NA	EXTRACTOR TUBE BLACK
17	SCH0008968-01	CPU/POWER BOARD
18	ELE0062020	BOARD SUPPORT
19	Z0090002113	MOTOR 24 DC 97 RPM

www.rheavendors.com tel: 0039 02 966 551 fax: 0039 02 96 55 086 email: rheavendors@rheavendors.com exclusive property of rheavendors group

DOOR

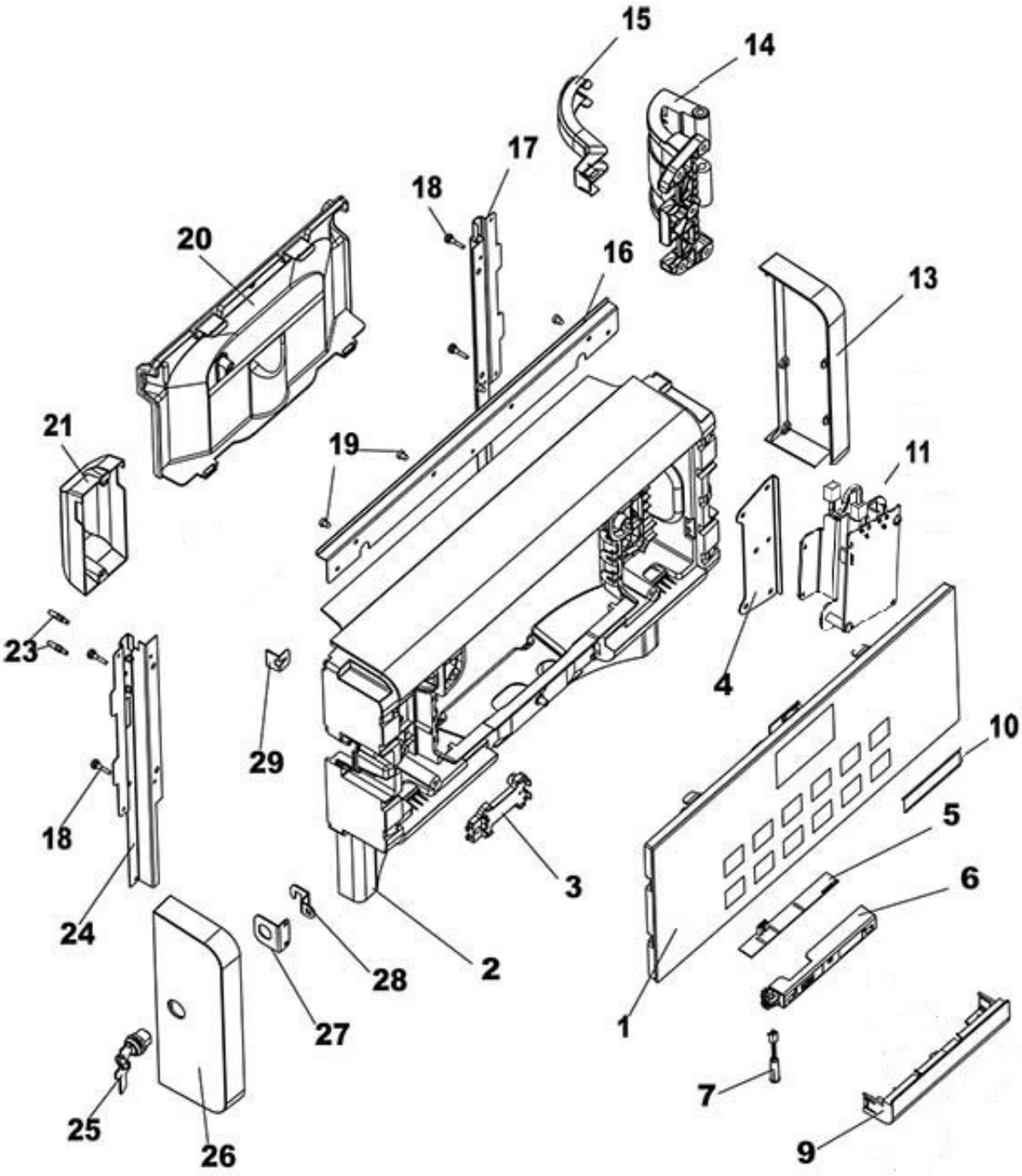

www.rheavendors.com tel: 0039 02 966 551 fax: 0039 02 96 55 086 email: rheavendors@rheavendors.com exclusive property of rheavendors group

DOOR		
Pos.	**Code**	**Description**
1		See table LIGHTING GLASS
2	Z002A115006-06NA	DOOR STRUCTURE
3	Z002A115112NA	ANTENNA SUPPORT
4	Z002A115015	FIXING HINGE REINFORCEMENT
5	SCHA115015	LIGHTING CUP STATION BOARD
6	Z002A115019-03TR	LIGHT GUIDE
7	ELTA115000	REED SENSOR
9	Z002A115012CM	NOZZLE COVER CP
10	1030000325	RFID LOGO
11		See table RFID CARD READER
13	Z002A115010CM	DOOR COVER
14	Z002A115119NA	DOOR HINGE ASSEMBLED
15	Z002A115102NA	WIRES COVER
16	Z002A115009NA	UPPER REINFORCEMENT
17	Z002A115007NA	RIGHT SIDE REINFORCEMENT
18	VITA115000	BUMPER D.10x4,2
19	Z0020018061	SELECTION BUTTON PLUG
20	Z002A115110NA	ELECTRONIC BOARDS COVER
21	Z002A115111NA	PAY. SYS. COVER
23	Z002A115018	DOOR PIN
24	Z002A115008NA	LEFT SIDE REINFORCEMENT
25	SER0000028	LOCK MM20 + KEY 3480
26	Z002A115011CM	COVER LOCK SIDE
27	Z002A105520	LOCK SUPPORT
28	Z002A115014	LOCK PLATE CP
29	Z002A115113	WIRES SUPPORT

www.rheavendors.com tel: 0039 02 966 551 fax: 0039 02 96 55 086 email: rheavendors@rheavendors.com exclusive property of rheavendors group

LIGHTING GLASS

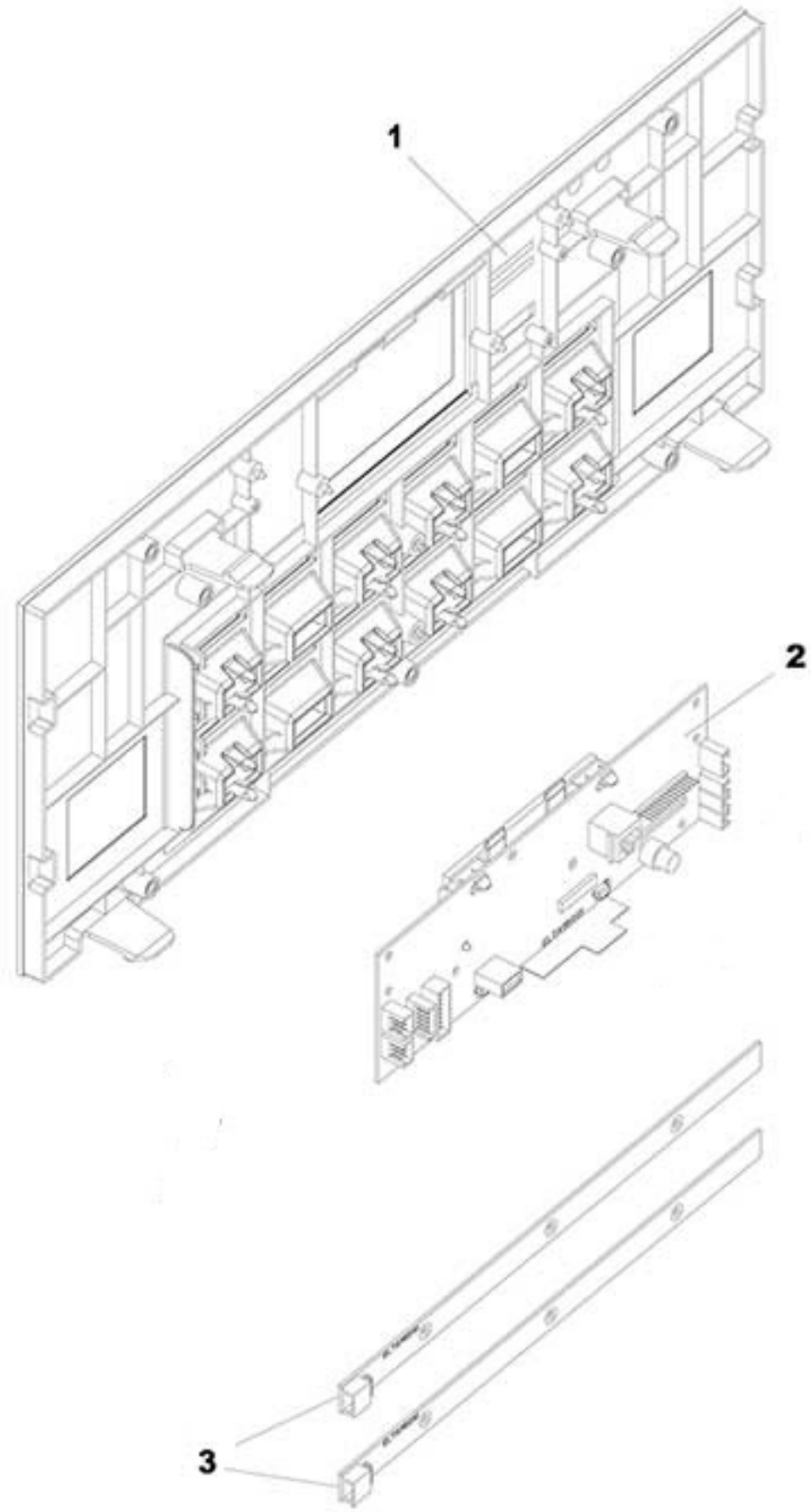

www.rheavendors.com tel: 0039 02 966 551 fax: 0039 02 96 55 086 email: rheavendors@rheavendors.com exclusive property of rheavendors group

LIGHTING GLASS		
Pos.	**Code**	**Description**
1/a	103A115600CLR	§FRONT SHOWCASE+KEYB.SUP.BLACK
1/b	103A115601CLR	§FRONT SHOWCASE+KEYB.SUPP.ORO
2	SCHA115001	4,3" GPU LCD
3	SCHA115010	LABELS LIGHTING BOARD

www.rheavendors.com tel: 0039 02 966 551 fax: 0039 02 96 55 086 email: rheavendors@rheavendors.com exclusive property of rheavendors group

mixer plan

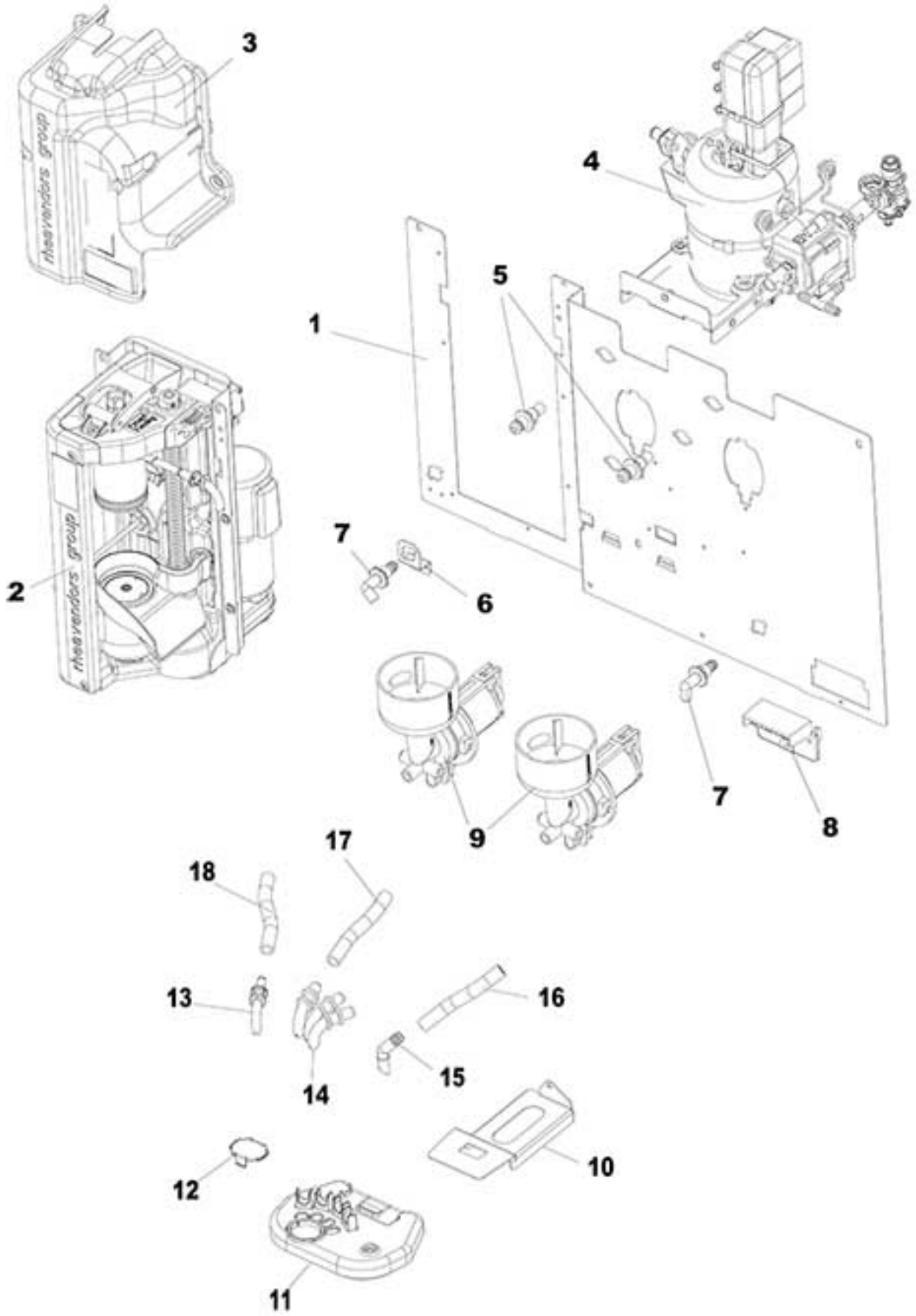

www.rheavendors.com tel: 0039 02 966 551 fax: 0039 02 96 55 086 email: rheavendors@rheavendors.com exclusive property of rheavendors group

mixer plan		
Pos.	**Code**	**Description**
1	Z026A115026NA	2MIXER+VARIFL BREW SUP
2		See table PROFESSIONAL BREWER GROUP D.45
3	Z0250014007CL1	§ VARIFLEX BREWER COVER-TT
4		See table ESPRESSO boiler support
5	Z0080100043CL	§ MIXER CONNECTOR+OR
6	Z026A115013	OUTLET PIPE SUPPORT
7	Z0080100084	90° CONNECTOR
8	Z0070035010CL	§ DRIP TRAY SENSOR SUPPORT
9		See table mixers
10	Z026A115050NA	NOZZLE HOLDER SUPPORT
11	Z002A115151NA	HOLDER PIPES PRODUCTS
12	Z002A115152NA	PLUG
13	Z0020039539R	§ SPOUT DELIVERY D.4
14	Z0010020052	PRODUCT NOZZLE
15	Z0020039533	SPOUT DELIVERY 30° D.6
16/a	TSIL06/09TC-10	SILICON HOSE 5,6X8,8 MT.10
16/b	TSIL06/09TC-50	SILICON HOSE 5,6X8,8 MT.50
17/a	TSIL06/11T-10	SILICON HOSE 6X11 MT.10
17/b	TSIL06/11T-50	SILICON HOSE 6X11 MT.50
18/a	TSIL04/06T-10	SILICON HOSE 4X6 MT.10
18/b	TSIL04/06T-50	SILICON HOSE 4X6 MT.50

www.rheavendors.com tel: 0039 02 966 551 fax: 0039 02 96 55 086 email: rheavendors@rheavendors.com exclusive property of rheavendors group

mixers

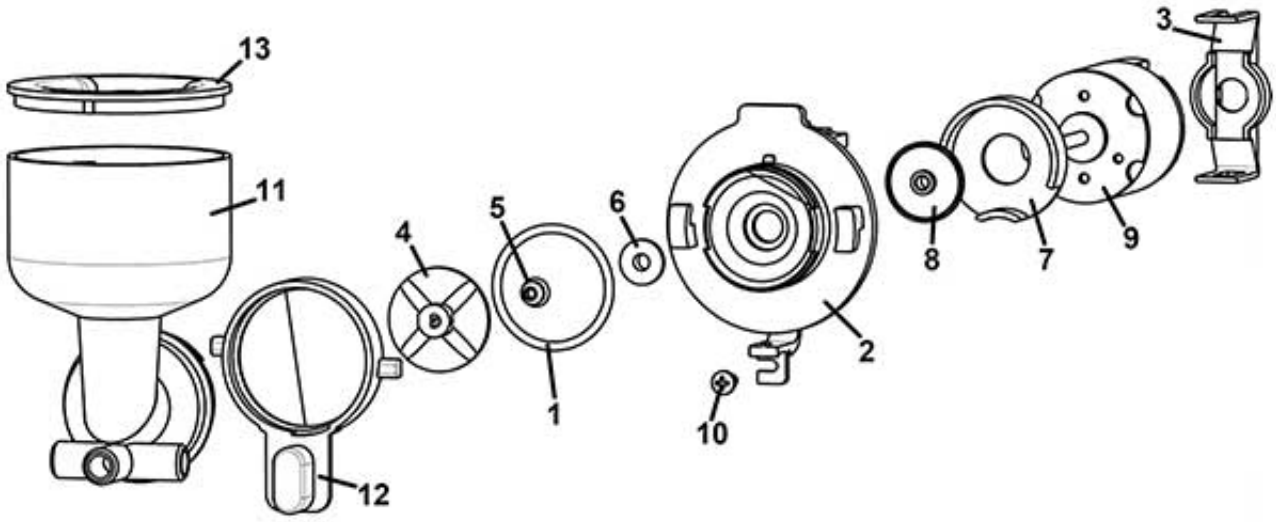

www.rheavendors.com tel: 0039 02 966 551 fax: 0039 02 96 55 086 email: rheavendors@rheavendors.com exclusive property of rheavendors group

mixers		
Pos.	**Code**	**Description**
1	GUA0000084	OR 3131 RED SILICONE A60
2	Z0080100005	MOTOR MIXER BASE
3	Z0080100009IC	MIXER MOTOR SUPPORT RAL2011
4	Z0080100011	MIXER FAN
5	Z0080100102	MIXER SHAFT GASKET
6	Z0080100015	MIXER BUSH
7	Z0080100023IC	MIXER COVER RAL2011
8	Z0080100024	MIXER FAN
9	Z0090003023	MIXER MOTOR 24V DC SHAFT D.4
10	VIT0002401	SCREW ST HEAD CAP M3.5X9.5
11/a	Z0080200101L	MIXING BOWL L.W/H20 BREAKER
11/b	Z0080200103C	MIXING BOWL F.W/H20 BREAKER
12	Z0080100006IC	LOCK RING RAL2011
13	Z0080100008	UPPER RING
100	Z0080100001R	§ MIXER BOWL BASE+MOTOR (from pos.1 to pos.9)

www.rheavendors.com tel: 0039 02 966 551 fax: 0039 02 96 55 086 email: rheavendors@rheavendors.com exclusive property of rheavendors group

PRO BREWER SUPPORT+MOTOR

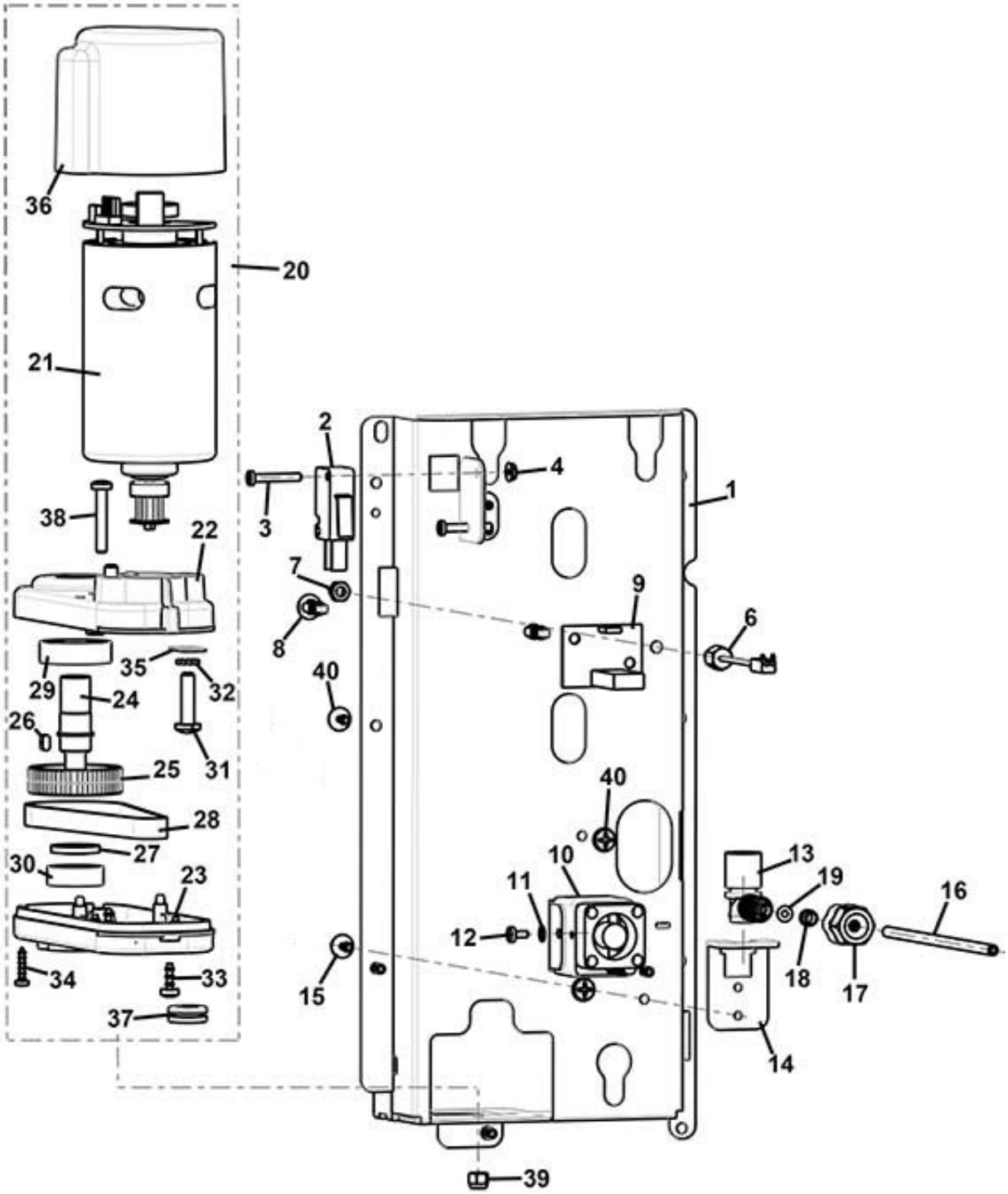

www.rheavendors.com tel: 0039 02 966 551 fax: 0039 02 96 55 086 email: rheavendors@rheavendors.com exclusive property of rheavendors group

PRO BREWER SUPPORT+MOTOR		
Pos.	**Code**	**Description**
1	Z0260014002	VARIFLEX BREWER SUPPORT
2	ELE0001522	MICROSWITCH
3	VIT0000006	SCREW HEAD TAP CAP M3X16
4	VIT0004701	NUT M3
6	ELE0000931	PROBE NTC 10K/TE
7	VIT0004816	NUT M4
8	ELE0062020	BOARD SUPPORT
9		Heater board sold with code ELE0000467-02
10	ELE0000467-02	FAN HEATER 24V DC + BOARD
11	VIT0003102	SPRING WASHER 3,2
12	VIT0000002	SCREW HEAD TAP CAP M3X6
13	Z0250014084-02	FEMALE CONNECTOR
14	Z0260014009-01	H2O CONNECTOR SUPPORT
15	VIT0002009	SCREW ST HEAD CAP M3.5X6.5
16	TTEF02/04T	PTFE PIPE 2X4
17	Z0250014086	NUT
18	Z0100002014	LOCKING RING SO1-4
19	GUA0000061	OR 2010 VITON 80 BLACK
20	Z0090002250R	§ VARIFLEX BREW. GEARBOX MOTOR
21	Z0090002252-01	§ MOTOR 24V DC
22	Z0090002222NA	MOTOR UPPER CASE RAL9005
23	Z0090002223NA	MOTOR LOWER CASE RAL9005
24	Z0090002224	FEMALE CONNECTOR SHAFT
25	Z0090002255AN	PULLEY
26	VIT0006703	CLAMP
27	Z0090002226	SPACER
28	Z0090002258	BELT
29	VIT0009324	BEARING
30	VIT0009320	BEARING
31	VIT0000017	SCREW HEAD TAP CAP M5X20
32	VIT0003104	SPRING WASHER 5,3
33	VIT0002469	SCREW HEAD TAP M3.5X10
34	VIT0002014	SCREW ST HEAD CAP M2.9X13
35	Z0090002240	MOTOR SPACER
36	Z0090002235CK	MR GV BOARD COVER R.7037
37	GUA0010501	ELECTRICAL GROMMET DG 7,5
38	VIT0000015	SCREW HEAD TAP CAP M4X25
39	VIT0004815	NUT M4
40	VIT0002401	SCREW ST HEAD CAP M3.5X9.5
100	Z0250014086R	§ WATER INLET TUBE 0,15 mt From pos. 16 to pos. 19
101	Z0090002224R	§ FEMALE CONNECTOR SHAFT From pos.24 to pos.30 excluded pos.28

www.rheavendors.com tel: 0039 02 966 551 fax: 0039 02 96 55 086 email: rheavendors@rheavendors.com exclusive property of rheavendors group

PROFESSIONAL BREWER GROUP D.45

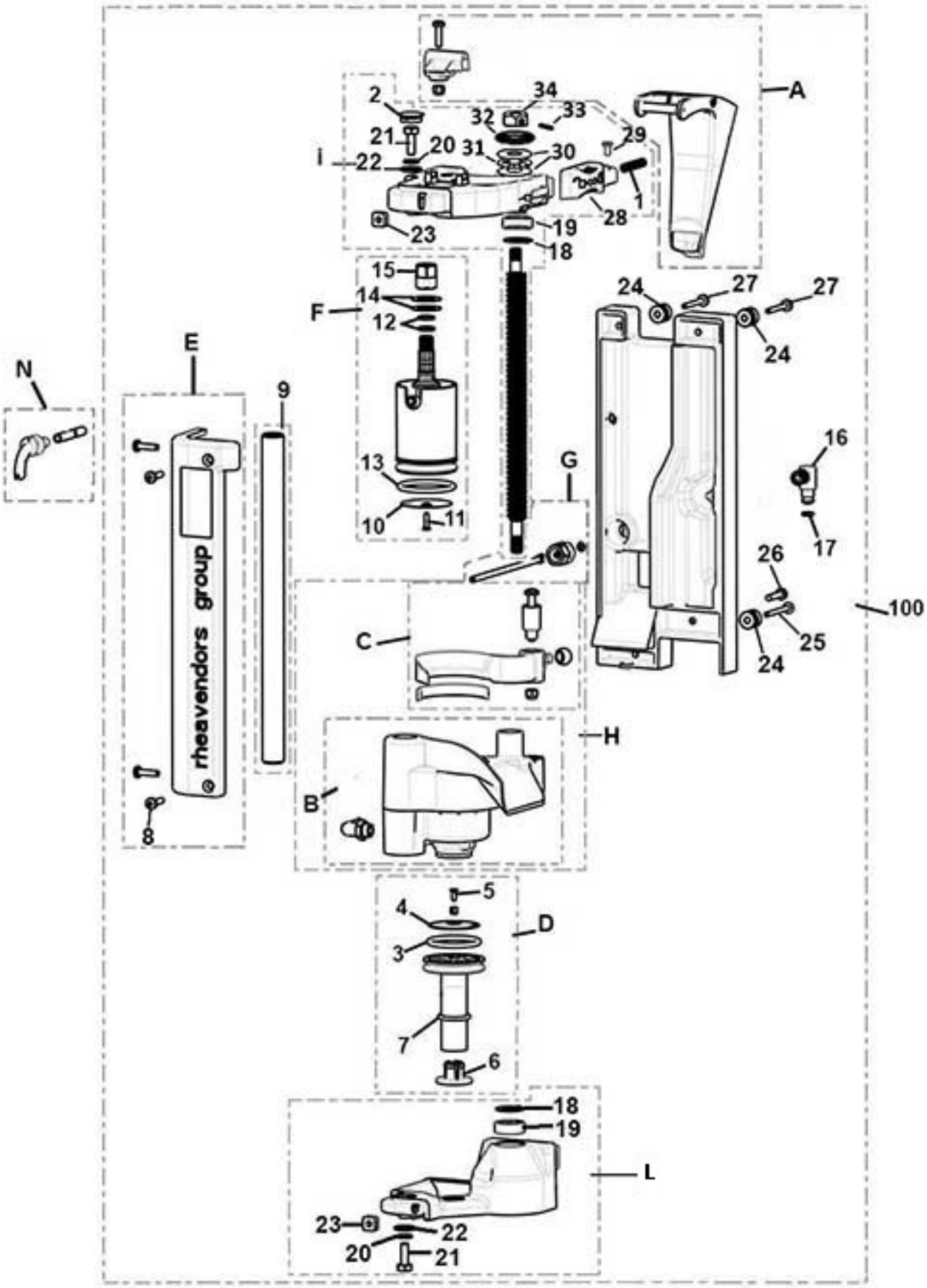

www.rheavendors.com tel: 0039 02 966 551 fax: 0039 02 96 55 086 email: rheavendors@rheavendors.com exclusive property of rheavendors group

PROFESSIONAL BREWER GROUP D.45		
Pos.	**Code**	**Description**
A	Z0250014008R	§ CHUTE D. 45
1	Z0250014081	SPRING
2	GUA0011022	PLUG
B	Z0250014022R	§ INFUSION CHAMBER D.45 included internal components and elbow
C	Z0250014024R	§ BRUSH D.45
D	Z0250014028R	§ LOWER FILTER HOLDER D.45
3	GUA0000097	OR 4131 RED SILICONE LSR70
4	Z0250014029	COFFEE FILTER DIAM. 37.3
5	VIT0000121	SCREW COUNT FLAT HEAD M3X8
6	Z0250014027R1	LOWER PISTON LOCK+SET SCREW
7	GUA0000103	OR 3075 SILICON
E	Z0250014019R	§ FRONTAL COVER
8	VIT0001009	SCREW HEAD TAP CAP M4X16
9	Z0250014013-04	CYLINDRICAL GUIDE
F	Z0250014045R	§ UPPER FILTER HOLDER D.45
10	Z0250008211	COFFEE FILTER 37,3
11	VIT0000129	SCREW COUNT HEAD M3X12
12	GUA0000045	OR 108 VITON 80 BLACK
13	GUA0000067	OR 4143 RED SILICONE LSR70
14	Z0250014048	SPRING
15	Z0250014086	NUT
16	Z0250014085	MALE CONNECTOR
17	GUA0000004	OR 104 NBR AL 75 BLACK
G	Z0250014086R	§ WATER INLET TUBE 0,15 mt
H	Z0250014020R	§ INFUSION CHAMBER D.45
I	Z0250014005R2	§UPPER SUPPORT WITHOUT CHUTE
L	Z0250014012R	§ LOWER SUPPORT
18	Z0250014077	SPACER
19	VIT0009320	BEARING
20	VIT0003113	SPRING WASHER 6,4
21	VIT0000249	SCREW HEX HEAD M6X16
22	Z0250014079	WASHER D.15 D.6,5 SP.1,5
23	VIT0009112	NUT M4
24	Z0250014072	PIN
25	VIT0000033	SCREW HEAD TAP CAP M4X35
26	VIT0001011	SCREW HEAD TAP CAP M4X20
27	VIT0001006	SCREW HEAD TAP CAP M4X30
28	Z0250014082	BREWER STOPPER BUTTON
29	VIT0002009	SCREW ST HEAD CAP M3.5X6.5
30	VIT0009318	SPACER WASHER
31	VIT0009317	BEARING
32	GUA0001007	V RING GASKET VA16
33	VIT0007011	SET SCREW 4X4
34	Z0250014071	NUT M8
N	Z0020039539R	§ SPOUT DELIVERY D.4
100	Z0250014000CL	COFFEE BREWER VARIFLEX D 45

www.rheavendors.com tel: 0039 02 966 551 fax: 0039 02 96 55 086 email: rheavendors@rheavendors.com exclusive property of rheavendors group

PROFESSIONAL BREWER GROUP D.36

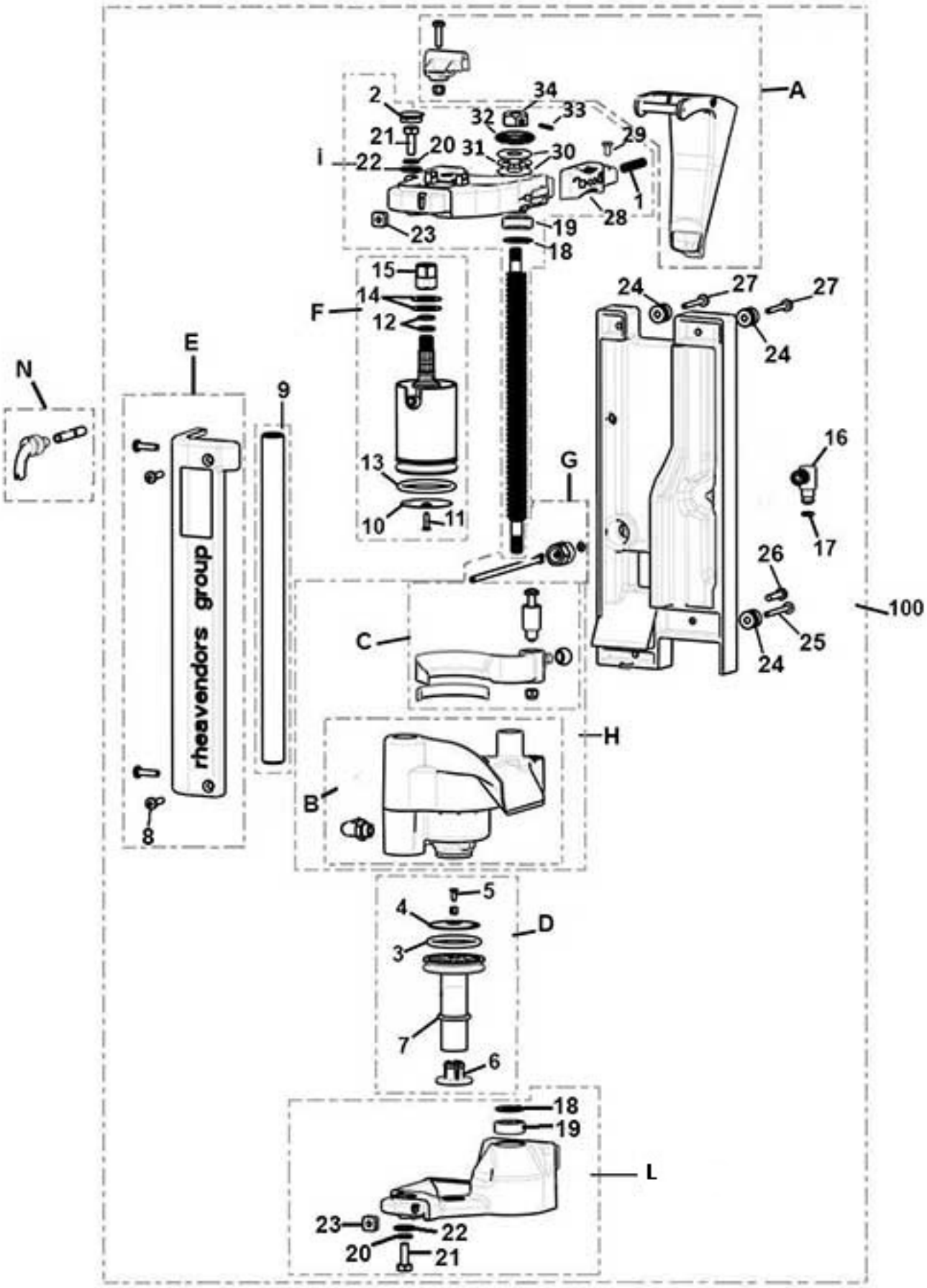

www.rheavendors.com tel: 0039 02 966 551 fax: 0039 02 96 55 086 email: rheavendors@rheavendors.com exclusive property of rheavendors group

PROFESSIONAL BREWER GROUP D.36		
Pos.	**Code**	**Description**
A	Z0250014033R	§ CHUTE D. 36
1	Z0250014081	SPRING
2	GUA0011022	PLUG
B	Z0250014032R	§ INFUSION CHAMBER D.36 included internal components and elbow
C	Z0250014034R	§ BRUSH D.36
D	Z0250014038R	§ LOWER FILTER HOLDER D.36
3	GUA0000080	OR 4112 RED SILICONE LSR70
4	Z0250008019	COFFEE FILTER
5	VIT0000121	SCREW COUNT FLAT HEAD M3X8
6	Z0250014027R1	LOWER PISTON LOCK+SET SCREW
7	GUA0000103	OR 3075 SILICON
E	Z0250014019R	§ FRONTAL COVER
8	VIT0001009	SCREW HEAD TAP CAP M4X16
9	Z0250014013	
F	Z0250014040R	§ UPPER FILTER HOLDER D.36
10	Z0250008099	COFFEE FILTER 33,4
11	VIT0000129	SCREW COUNT HEAD M3X12
12	GUA0000045	OR 108 VITON 80 BLACK
13	GUA0000080	OR 4112 RED SILICONE LSR70
14	Z0250014048	SPRING
15	Z0250014086	NUT
16	Z0250014085	MALE CONNECTOR
17	GUA0000004	OR 104 NBR AL 75 BLACK
G	Z0250014086R	§ WATER INLET TUBE 0,15 mt
H	Z0250014030R	§ CHAMBER D.36
I	Z0250014005R2	§UPPER SUPPORT WITHOUT CHUTE
L	Z0250014012R	§ LOWER SUPPORT
18	Z0250014077	SPACER
19	VIT0009320	BEARING
20	VIT0003113	SPRING WASHER 6,4
21	VIT0000249	SCREW HEX HEAD M6X16
22	Z0250014079	WASHER D.15 D.6,5 SP.1,5
23	VIT0009112	NUT M4
24	Z0250014072	PIN
25	VIT0000033	SCREW HEAD TAP CAP M4X35
26	VIT0001011	SCREW HEAD TAP CAP M4X20
27	VIT0001006	SCREW HEAD TAP CAP M4X30
28	Z0250014082	BREWER STOPPER BUTTON
29	VIT0002009	SCREW ST HEAD CAP M3.5X6.5
30	VIT0009318	SPACER WASHER
31	VIT0009317	BEARING
32	GUA0001007	V RING GASKET VA16
33	VIT0007011	SET SCREW 4X4
34	Z0250014071	NUT M8
N	Z0020039539R	§ SPOUT DELIVERY D.4
100	Z0250014060CL	§ COFFEE BREWER VARIFLEX D.36

www.rheavendors.com tel: 0039 02 966 551 fax: 0039 02 96 55 086 email: rheavendors@rheavendors.com exclusive property of rheavendors group

ESPRESSO boiler support

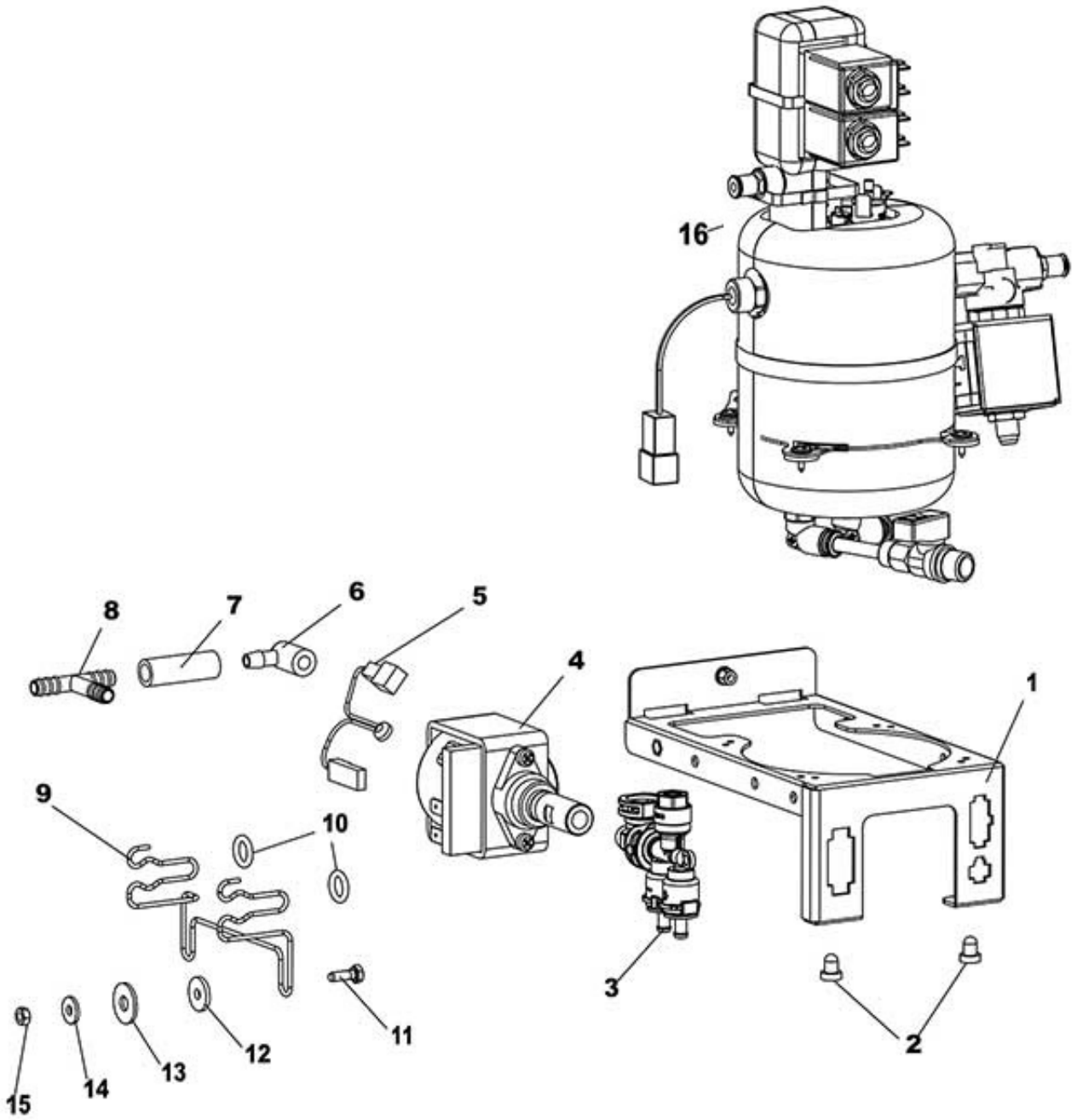

www.rheavendors.com tel: 0039 02 966 551 fax: 0039 02 96 55 086 email: rheavendors@rheavendors.com exclusive property of rheavendors group

ESPRESSO boiler support		
Pos.	**Code**	**Description**
1	Z0600019772NA	INOX BOILER FIXING PLATE
2	Z0020018061	SELECTION BUTTON PLUG
3	Z0110001151R	VALVE 3W W/BY-PASS 11BAR
4/a	Z0110004065	PUMP PLUS PGØ7 230V-50HZ
4/b	Z0110004067	PUMP EP5 220V 60HZ For version 220V
5	ELE0000915	PUMP THERMOPROTECTOR
6	Z0110004023	CONNECTOR
7/a	TSIL05/08T-10	SILICON HOSE 5X8 MT.10
7/b	TSIL05/08T-50	SILICON HOSE 5X8 MT.50
8	Z0100003022	T CONNECTOR 461 TS UL
9	Z0110004038	PUMP SUPPORT
10	GUA0000043	OR 109 NBR AL 75 BLACK
11	VIT0000234	SCREW HEX HEAD M4X12 A2
12	1600001098	RUBBER SPACER D. 4,5
13	VIT0003301	WASHER 4,3X12X1,5
14	VIT0003103	SPRING WASHER 4,3
15	VIT0004503	NUT M4
16		See table ESPRESSO BOILER STAINLESS STEEL 400CC
17	Z060A115000CL	§ S. STEEL BOILER-3+1V. 230V Included pos. 1 + 2 + 16

www.rheavendors.com tel: 0039 02 966 551 fax: 0039 02 96 55 086 email: rheavendors@rheavendors.com exclusive property of rheavendors group

ESPRESSO BOILER STAINLESS STEEL 400CC

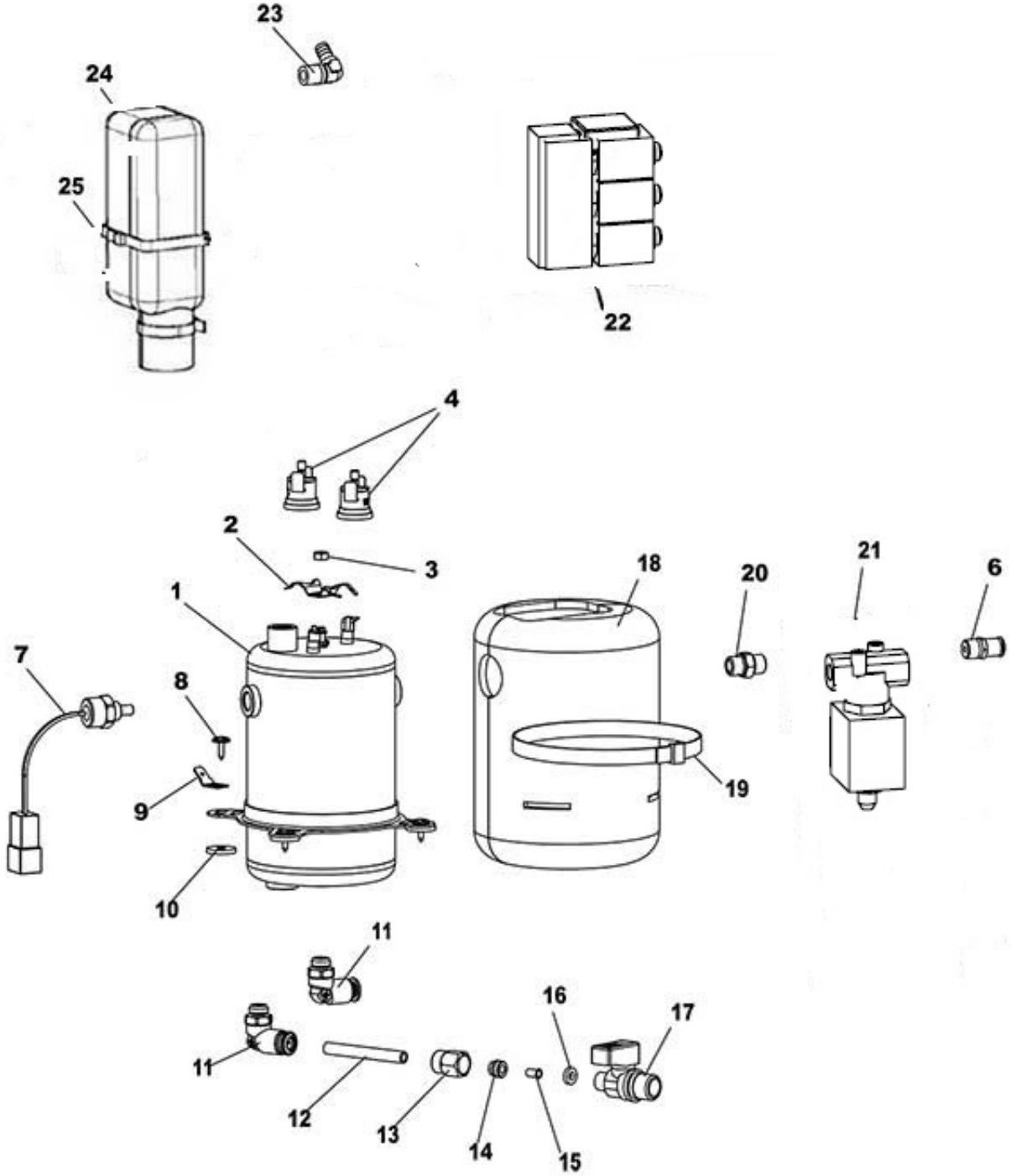

www.rheavendors.com tel: 0039 02 966 551 fax: 0039 02 96 55 086 email: rheavendors@rheavendors.com exclusive property of rheavendors group

ESPRESSO BOILER STAINLESS STEEL 400CC		
Pos.	**Code**	**Description**
1	Z0600019701CL	§ BOILER 1500 W 230V 400 CC
2	Z0600019188	THERMOSTAT CLIP
3	VIT0004826	NUT M4X0,7
4	ELE0000982	CLIXSON 127°
6	Z0100001070	STRAIGHT CONNECTOR 800 4-1/8
7	ELE0000975	PROBE
8	VIT0002401	SCREW ST HEAD CAP M3.5X9.5
9	Z0600019012	GROUND WIRING
10	1600001098	RUBBER SPACER D. 4,5
11	Z0100001109	ELBOW CONNECTOR 6-1/8+OR
12	TTEF04/06T	PTFE PIPE 4X6
13	Z0100001002	CONNECTOR NUT
14	Z0100002002	LOCKING RING SO1-6
15	Z0100002005	NUT D.4
16	Z0100003002	COPPER GASKET SO5-5-1/8
17	Z0600019017	TAP M/F 1/8
18	Z0600019195	INSULATION SHELL
19	FASC000214	PLASTIC CLIP BLACK 7,8X365
20	Z0100001084	NIPPLE 1/8
21	Z0110001124	VALVE 3W 1/8 24V DC 8W
22	Z0110001117	VALVE BLOCK 3V 2W 24V DC 7W
23	Z0100001102	CONNECTOR 1/8"-Ø7,2 90°
24	Z0600019196	EV HOUSING INSULATION
25	FASC000215	PLASTIC CLIP BLACK 2,6X200

www.rheavendors.com tel: 0039 02 966 551 fax: 0039 02 96 55 086 email: rheavendors@rheavendors.com exclusive property of rheavendors group

GRINDER

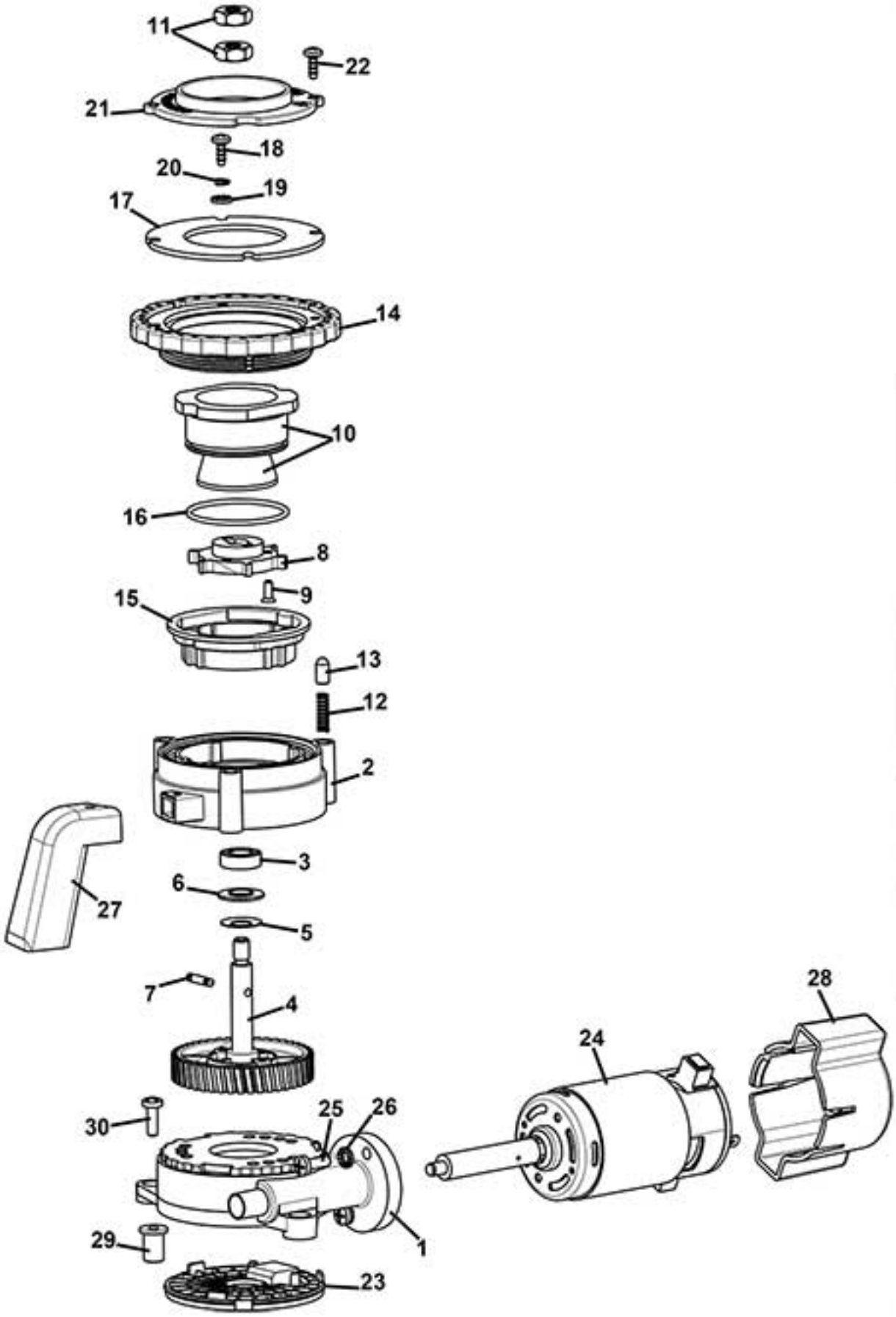

www.rheavendors.com tel: 0039 02 966 551 fax: 0039 02 96 55 086 email: rheavendors@rheavendors.com exclusive property of rheavendors group

GRINDER		
Pos.	**Code**	**Description**
1	Z0320001639NAR	§ MOTOR SUPPORT BLACK+PLUG
2	Z0320001602NAR	GRINDER BLADES SUPPORT
3	VIT0009325	BEARING
4	Z0320001608R	§ WHEEL+SHAFT+MAGNETS
5	Z0320001629	CUP SPRING 16x8,2 SP. 0,4
6	Z0320001625	BUSH
7	Z0320001704	GRINDER ROTATION PIN REINFORCE
8	Z0320001636	EJECTOR
9	VIT0000121	SCREW COUNT FLAT HEAD M3X8
10	Z0320001680	CONIC BLADES PLUS
11	Z0320001642	LOWER GRINDER FIXING NUT
12	Z0320001643	SPRING D.4X15X0,6
13	Z0320001624	REGULATION PIN
14	Z0320001605NAR	§ REGULATION RING NUT BLACK
15	Z0320001635-03NA	GRINDER SUPPORT BLACK
16	GUA0000124	SILICONE OR 2137
17	Z0320001622	UPPER GRINDER FIXING
18	VIT0002469	SCREW HEAD TAP M3.5X10
19	Z0320001666	SPACER D.4x7x2
20	VIT0003103	SPRING WASHER 4,3
21	Z0320001607NA	DUCT BLACK
22	VIT0002010	SCREW ST HEAD CAP M3.5X9.5
23	Z0320001604NA	PLUG BLACK
24	Z0090003047	GRINDER MOTOR 230V DC
25	VIT0000013	SCREW HEAD TAP CAP M4X12
26	VIT0003103	SPRING WASHER 4,3
27	Z0320004736-04	GRINDER CHUTE R.2011
28	Z0320001615NA	GRINDER SENSOR COVER BLACK
29	Z0320001628	NO-VIBRATION BUSH
30	VIT0000012	SCREW HEAD TAP CAP M4X10
100	Z0320001601CL3AL	§GRINDER VRFX 15° BREWER PLUS From pos.1 to pos. 28
101	Z0320001601CL3CAL	§GRINDER VRFX 15° PREGR.PLUS From pos.1 to pos. 28

www.rheavendors.com tel: 0039 02 966 551 fax: 0039 02 96 55 086 email: rheavendors@rheavendors.com exclusive property of rheavendors group

water inlet panel

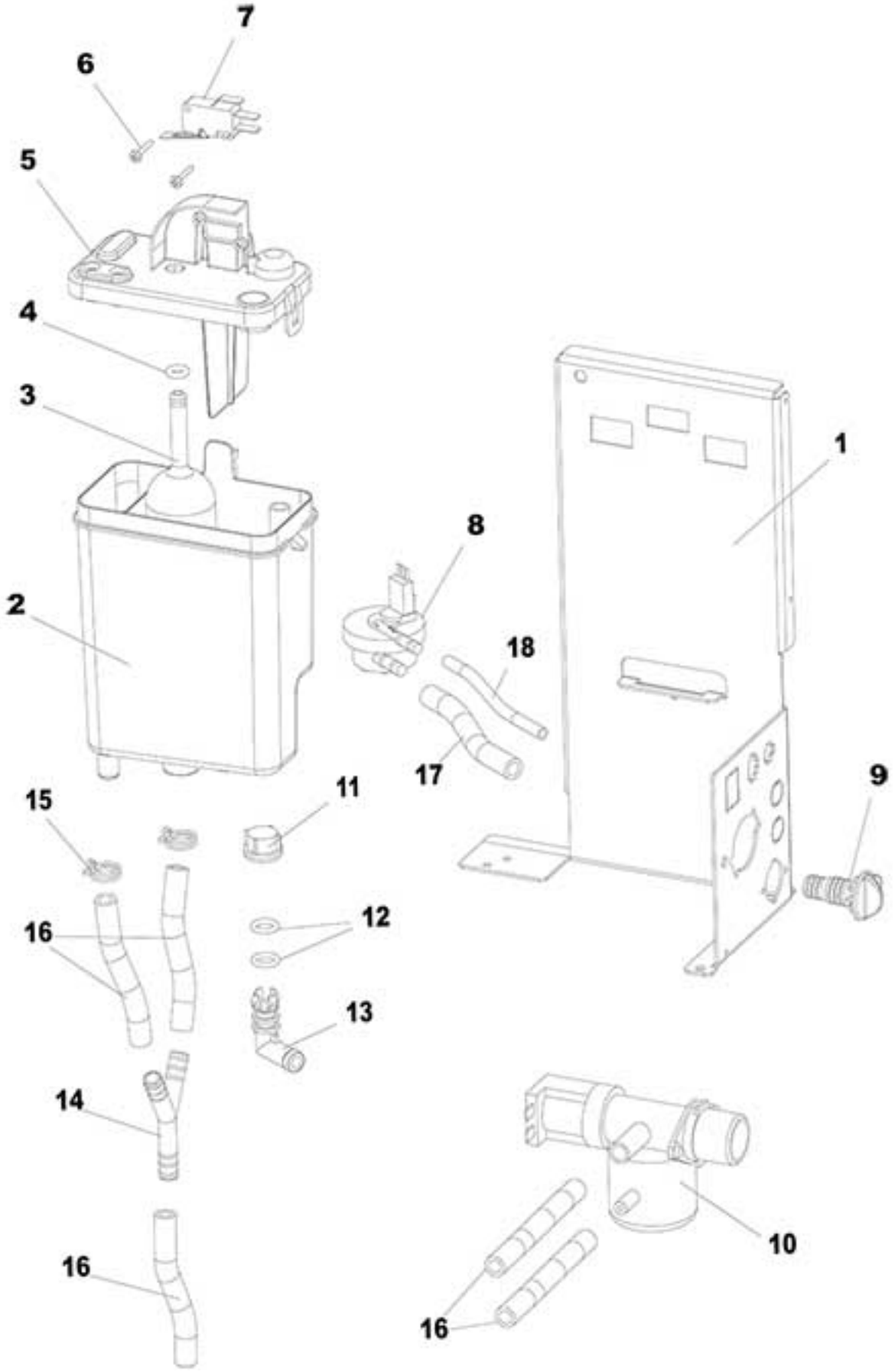

www.rheavendors.com tel: 0039 02 966 551 fax: 0039 02 96 55 086 email: rheavendors@rheavendors.com exclusive property of rheavendors group

water inlet panel		
Pos.	**Code**	**Description**
1	Z0010028248-06	HYDRAULIC HOLDER
2	Z0800013041	AIR BREAK TANK
3	Z0800013046	AIR BREAK WASTE FLOAT
4	GUA0000082	SILICON GASKET D.6
5	Z0800013043	AIR BREAK COVER
6	VIT0002013	SCREW ST HEAD CAP M2.9X19
7	ELE0001514	MICROSWITCH 3A 125-250VA
8	Z0110007003	VOLUMETRIC COUNTER
9	Z0600016455	H2O OUTLET PLUG
10	Z0110001058	WATER INLET VALVE 24V DC
11	Z0110020007	PLASTIC FILTER DIAM. 20
12	GUA0000043	OR 109 NBR AL 75 BLACK
13	Z0800009211	ELBOW CONNECTOR
14	Z0100001065	CONNECTOR "Y"
15	FASC000109	CLAMP
16/a	TSIL07/11T-10	SILICON HOSE 7X11 MT.10
16/b	TSIL07/11T-50	SILICON HOSE 7X11 MT.50
17/a	TSIL06/11T-10	SILICON HOSE 6X11 MT.10
17/b	TSIL06/11T-50	SILICON HOSE 6X11 MT.50
18/a	TSIL04/06T-10	SILICON HOSE 4X6 MT.10
18/b	TSIL04/06T-50	SILICON HOSE 4X6 MT.50
100	Z0010028247CL	§ PLUMBED AIR BREAK

www.rheavendors.com tel: 0039 02 966 551 fax: 0039 02 96 55 086 email: rheavendors@rheavendors.com exclusive property of rheavendors group

products container

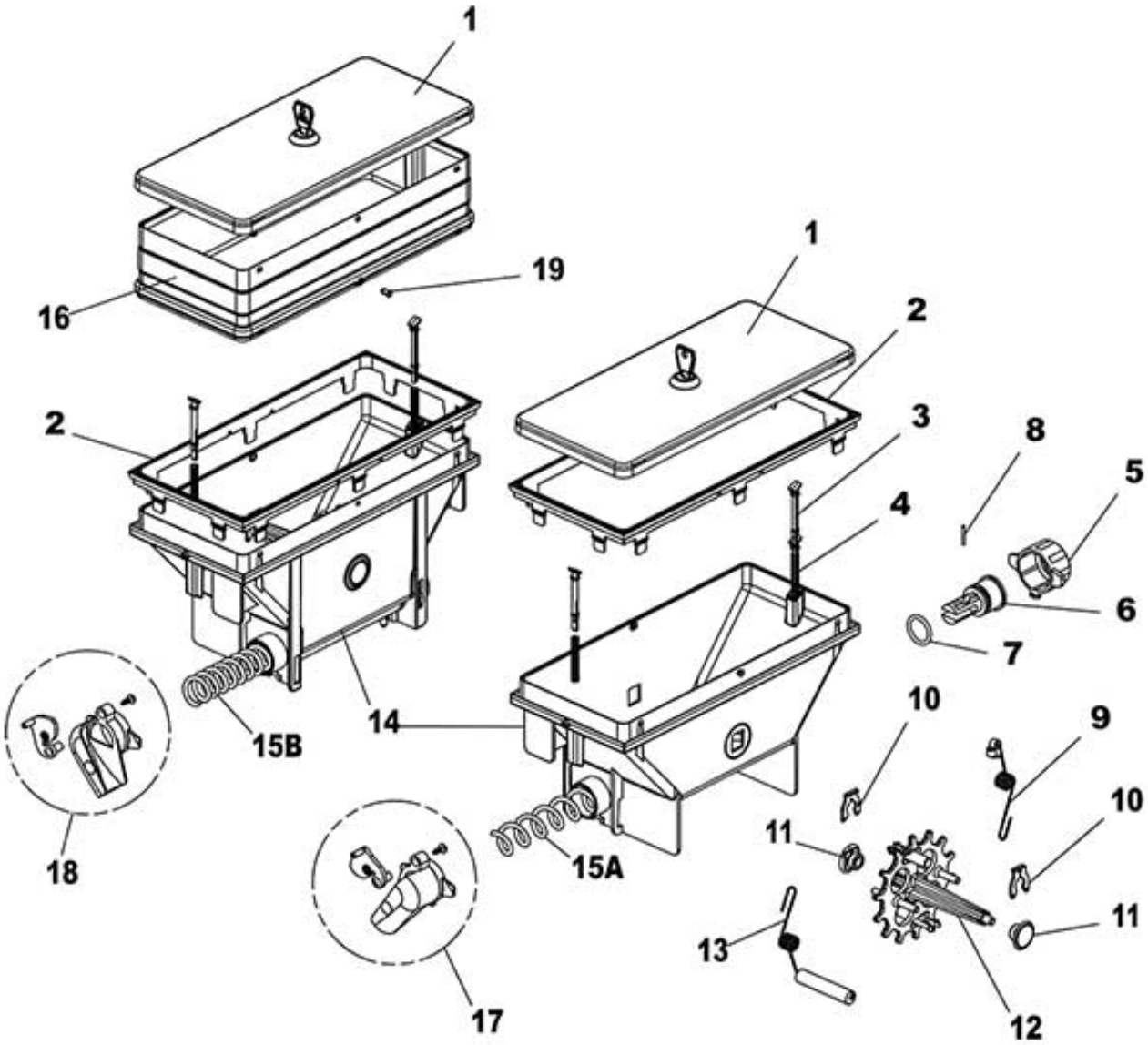

www.rheavendors.com tel: 0039 02 966 551 fax: 0039 02 96 55 086 email: rheavendors@rheavendors.com exclusive property of rheavendors group

products container		
Pos.	**Code**	**Description**
1	Z023A115020CL	§ COFFEE BEANS COVER
2	Z023A115011	PRODUCTS CONTAINER GASKET
3	Z023A115025	MICRO ACTUATOR
4	Z023A115028	SPRING
5	Z0230030011	REAR BUSH
6	Z0230030012	SPIRAL PIN
7	GUA0000083	OR 123 RED SILICONE A70
8	VIT0005106	PIN 2X14
9/a	Z023A115045CL	§ LH SMALL ANTIBRIDGING
9/b	Z023A115040CL	§ RH SMALL ANTIBRIDGING
10	Z0230030239	WHEEL PIN FORK
11	Z0230030238-02	WHEEL PIN
12	Z023A115009	ANTIBRIDGING GEAR
13/a	Z023A115055CL	§ PRODUCT AGITATOR LEFT
13/b	Z023A115050CL	§ PRODUCT AGITATOR RIGHT
14	Z023A115006	PRODUCTS CONTAINER
15/a	Z0230030014CL	§ SPIRAL 18
15/b	Z0230030013CL	§ SPIRAL 9
16	KITA115008	KIT 4 PRODUCT CONTAINER EXTEN
17/a	Z0230030043R	§ INGREDIENT CHUTE-LEFT RED
17/b	Z0230030057R	§ INGREDIENT CHUTE-LEFT ORANGE
18/b	Z0230030058R	§ INGRED. CHUTE-RIGHT ORANGE
18/a	Z0230030044R	§ INGREDIENT CHUTE-RIGHT RED
100	Z023A115005CL	§ CAN. 110 AGIT.18 W/LID-R
101	Z023A115005CL1	§ CAN. 110 AGIT.18 W/LID-L
102	Z023A115005CL2	§ CAN. 110 AGIT.9 W/LID-L
103	Z023A115005CL3	§ CAN. 110 AGIT.9 W/LID-R

www.rheavendors.com tel: 0039 02 966 551 fax: 0039 02 96 55 086 email: rheavendors@rheavendors.com exclusive property of rheavendors group

coffee beans container

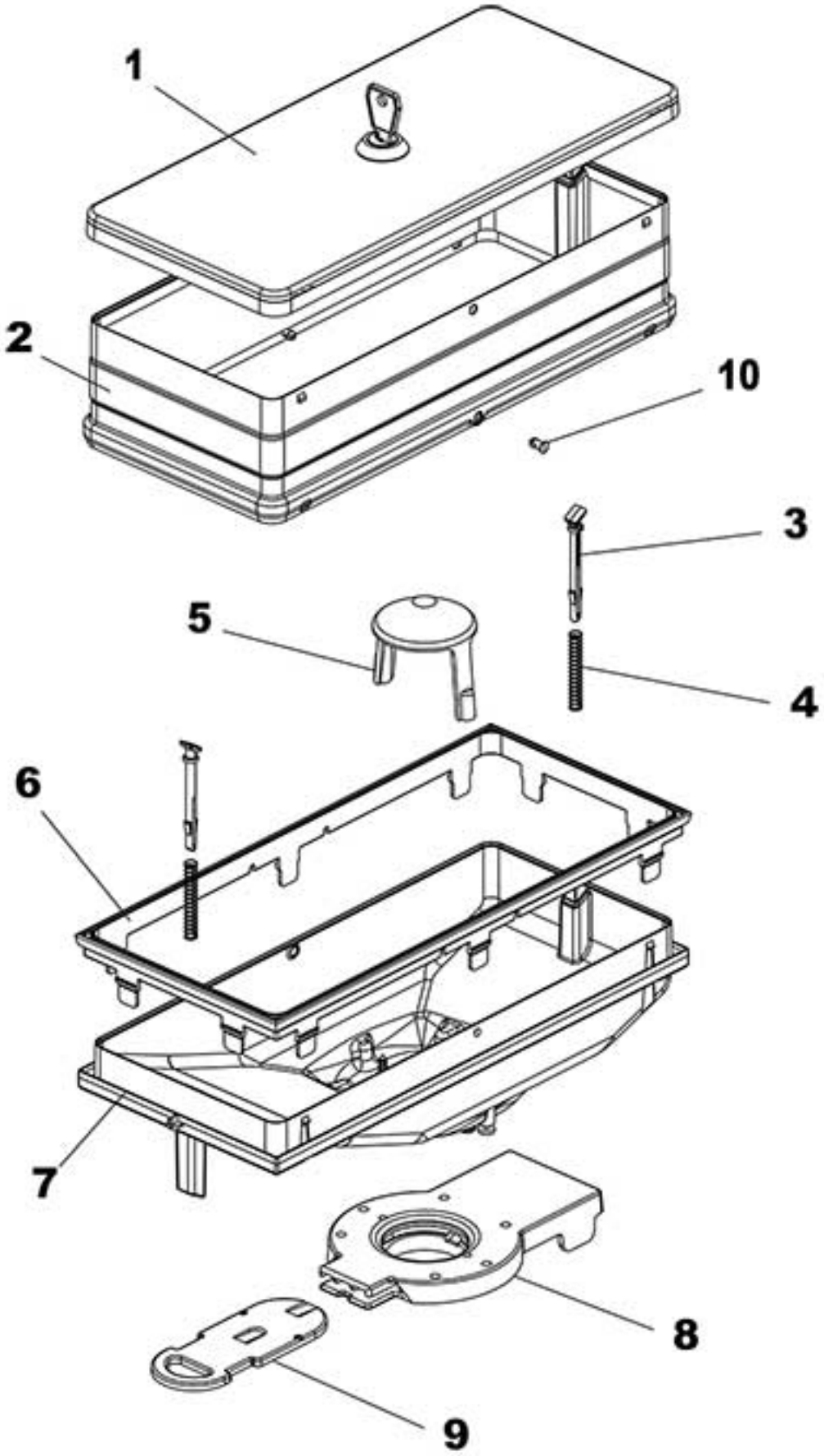

www.rheavendors.com tel: 0039 02 966 551 fax: 0039 02 96 55 086 email: rheavendors@rheavendors.com exclusive property of rheavendors group

coffee beans container		
Pos.	**Code**	**Description**
1	Z023A115020CL	§ COFFEE BEANS COVER
2	KITA115008	KIT 4 PRODUCT CONTAINER EXTEN
3	Z023A115025	MICRO ACTUATOR
4	Z023A115028	SPRING
5	Z0230015227TR	GRINDER COVER
6	Z023A115011	PRODUCTS CONTAINER GASKET
7	Z023A115003	COFFEE BEANS CONTAINER
8	Z023A115014	COFFEE/GRINDER ADAPTER BLACK
9	Z0230015224IC	COFFEE BEANS HOPPER STOPPER
10	Z023A115026R	LOCKING CLIP 10 pieces Package 10 Pcs
100	Z023A115004CL1	§ COFFEE BEANS CONTAINER

www.rheavendors.com tel: 0039 02 966 551 fax: 0039 02 96 55 086 email: rheavendors@rheavendors.com exclusive property of rheavendors group

RFID CARD READER

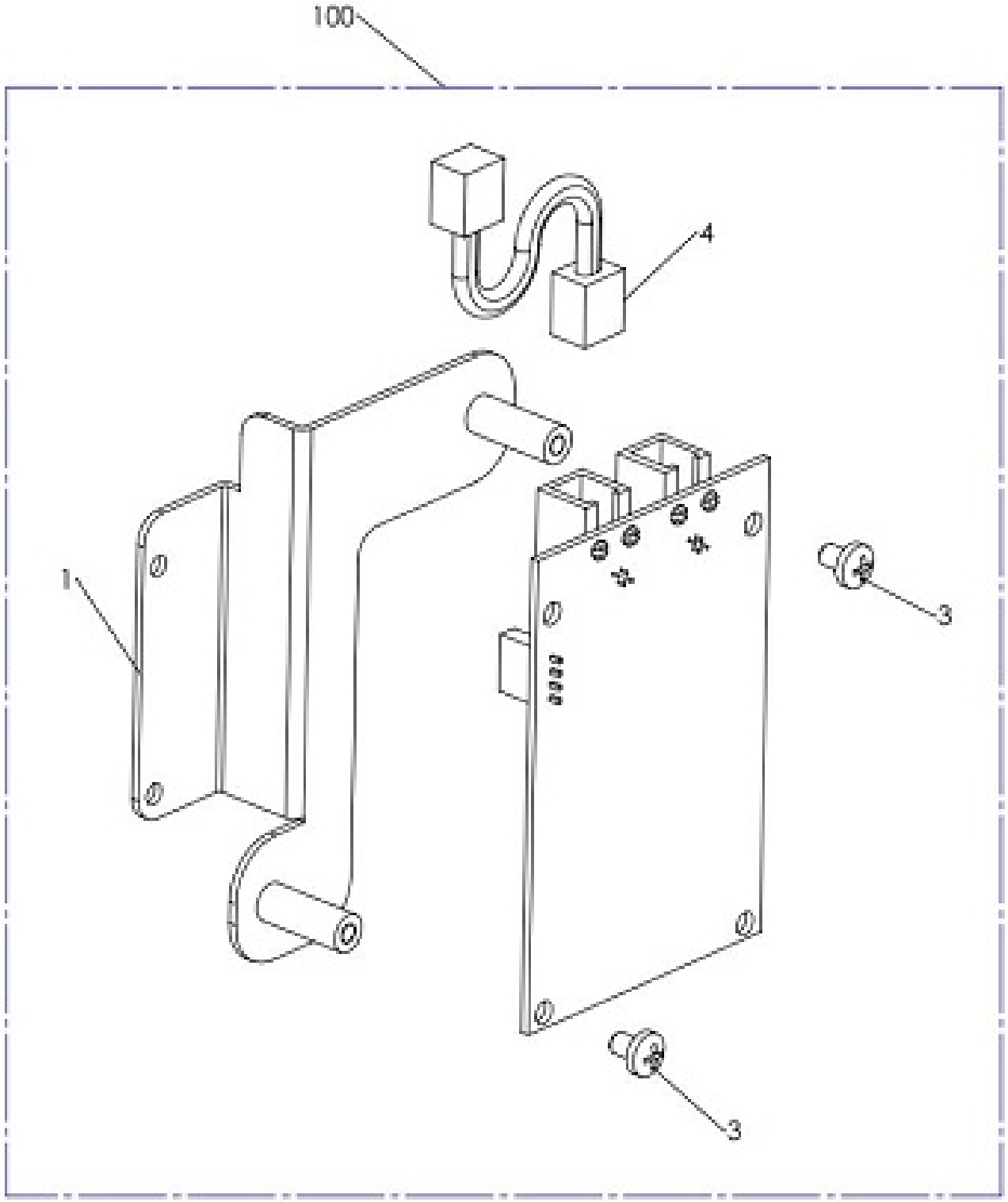

www.rheavendors.com tel: 0039 02 966 551 fax: 0039 02 96 55 086 email: rheavendors@rheavendors.com exclusive property of rheavendors group

RFID CARD READER		
Pos.	**Code**	**Description**
1	Z002B223016	RFID SUPPORT
2	SCH0006261	RFID CARD READER_1
3	VIT0000021	SCREW HEAD TAP CAP M4X6
4	ELT0030725	CON.CPU-RFID TELEF.4VIE CM140
100	Z002B223015CL	§ RFID

www.rheavendors.com tel: 0039 02 966 551 fax: 0039 02 96 55 086 email: rheavendors@rheavendors.com exclusive property of rheavendors group