vending machine

spare parts manual

www.rheavendors.com tel: 0039 02 966 551 fax: 0039 02 96 55 086 email: rheavendors@rheavendors.com exclusive property of rheavendors group

cabinet

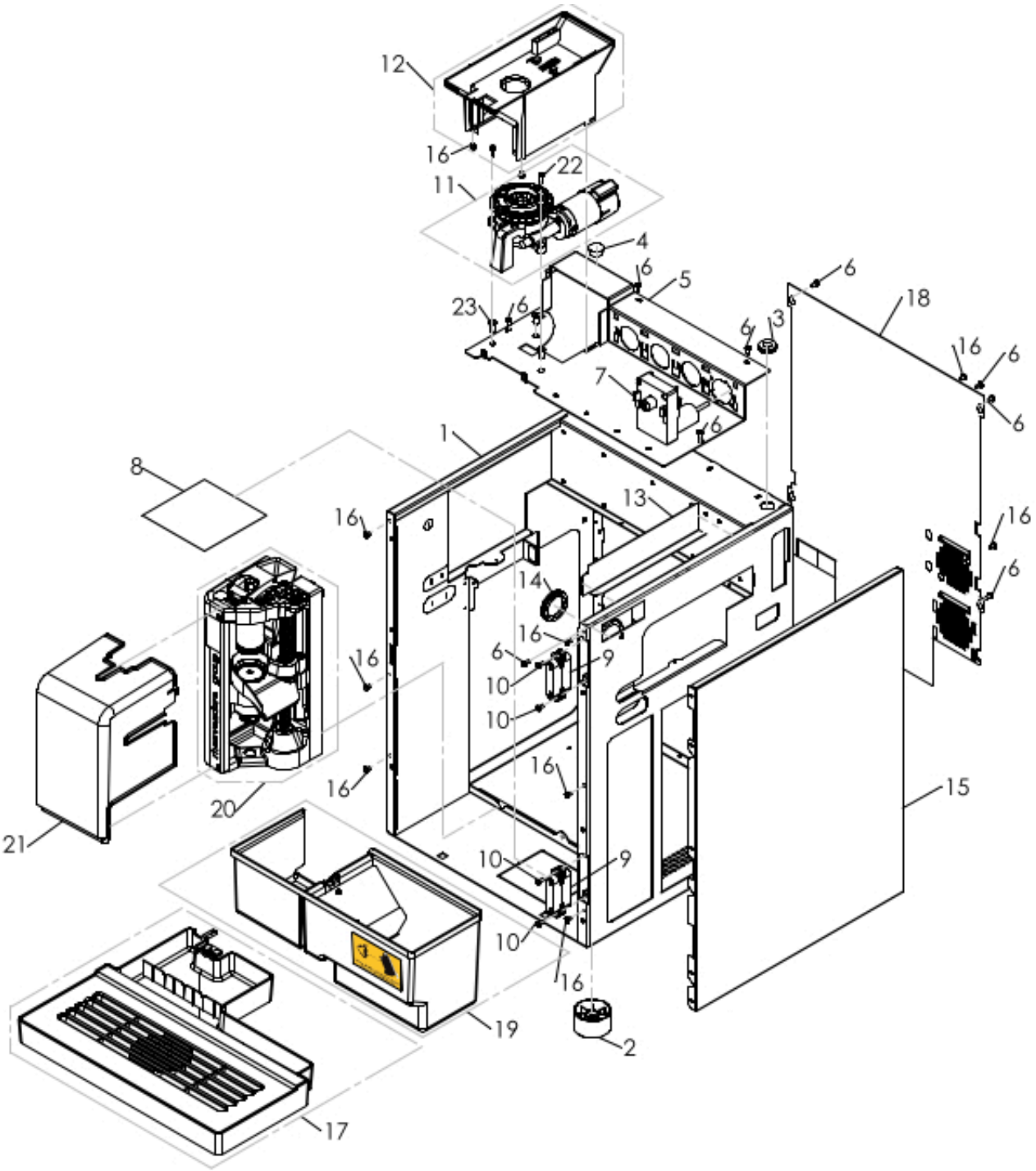

www.rheavendors.com tel: 0039 02 966 551 fax: 0039 02 96 55 086 email: rheavendors@rheavendors.com exclusive property of rheavendors group

cabinet		
Pos.	**Code**	**Description**
1	Z001B185005-03NA	CABINET
2	Z001B185042CL	FOOT D50X29
3	H00025008	CABLE GROMMET
4	GUA0011044	PLUG
5	Z001B185021-01NA	GRINDER SUPPORT
6	VIT0000011	SCREW HEAD TAP CAP M4X8
7	Z0090002113R	§ GEARBOX MOTOR 24V DC+FILTER
8	Z0010020413	GROUNDS STICKER
9	Z002B185021	HINGE
10	VIT0000107	SCREW COUNT FLAT HEAD M4X10
11		See table GRINDER
12		See table GRINDER COVER
13	Z001B185065NA	WIRING SUPPORT
14	GUA0010503	ELECTRICAL GROMMET DG 29
15	Z001B185030NA	REMOVABLE CLOSURE
16	VIT0000021	SCREW HEAD TAP CAP M4X6
17		See table DRIP TRAY
18	Z001B185037NA	REAR PANEL IND.
19		See table COFFEE GROUNDS CONTAINER
20/a		See table PROFESSIONAL BREWER GROUP D.36
20/b		See table PROFESSIONAL BREWER GROUP D.45
21	Z025B185001NA	VARIFLEX GROUP PROTECTION
22	VIT0000013	SCREW HEAD TAP CAP M4X12
23	Z0320001628	NO-VIBRATION BUSH

www.rheavendors.com tel: 0039 02 966 551 fax: 0039 02 96 55 086 email: rheavendors@rheavendors.com exclusive property of rheavendors group

UPPER COVER

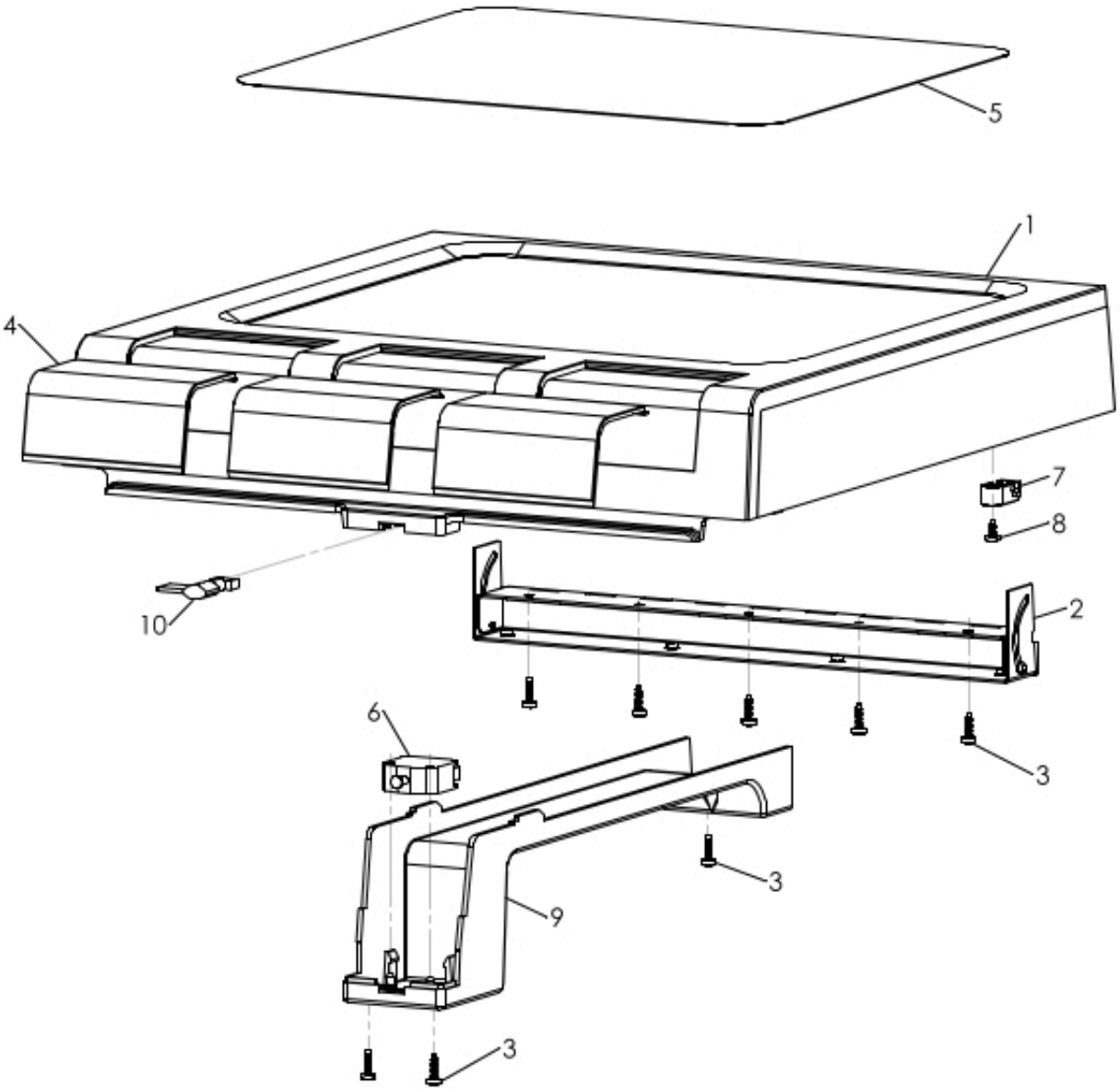

www.rheavendors.com tel: 0039 02 966 551 fax: 0039 02 96 55 086 email: rheavendors@rheavendors.com exclusive property of rheavendors group

UPPER COVER		
Pos.	**Code**	**Description**
1	Z001B185050NA	LID
2	Z001B185055	LID HINGE
3	VIT0002479	SCREW HEAD TAP 3,5X12
4/a	Z001B185056NF	LID BLACK
4/b	Z001B185056TR	LID GLASS
5	Z001B185053	LID PLATE
6	ELE0002019	SWITCH 16A 250V
7	Z0020043037NA	BOARD FIXING BRACKET
8	VIT0002475	SCREW HEAD TAP M3.5X8
9	Z001B185052NA	CABLE DUCT SUP.
10	Z0270011109IC	SERVICE KEY RAL2011

www.rheavendors.com tel: 0039 02 966 551 fax: 0039 02 96 55 086 email: rheavendors@rheavendors.com exclusive property of rheavendors group

rear cabinet

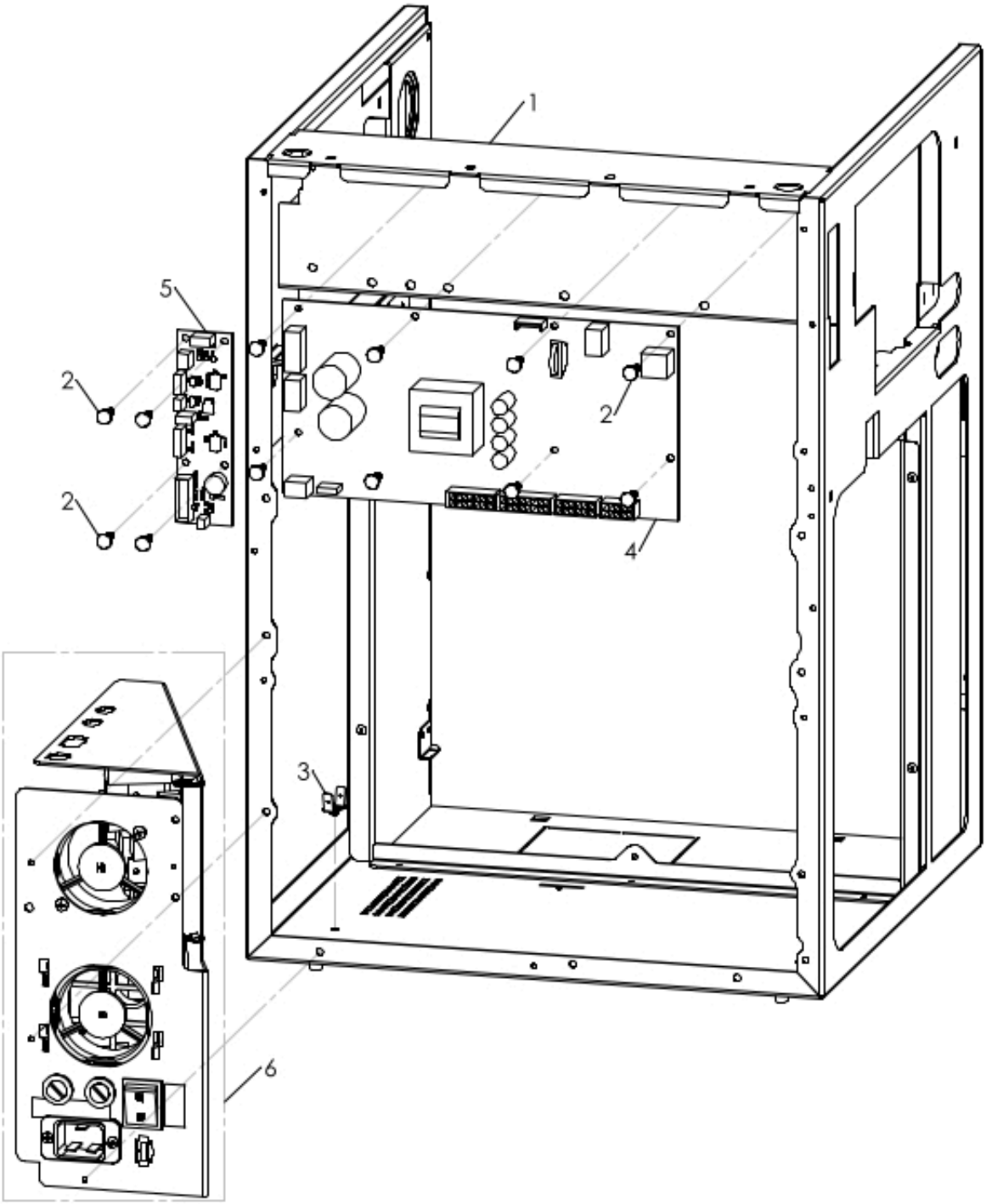

www.rheavendors.com tel: 0039 02 966 551 fax: 0039 02 96 55 086 email: rheavendors@rheavendors.com exclusive property of rheavendors group

rear cabinet		
Pos.	**Code**	**Description**
1	Z001B185005-03NA	CABINET
2	ELE0062020	BOARD SUPPORT
3	ELE0060520	GROUND PIN
4	BRD01001R	§CPU/PWR BOARD 3V_1 W/GROUND.
5	BRD0700100-00	INTERFACE BOARD
6		See table control panel

www.rheavendors.com tel: 0039 02 966 551 fax: 0039 02 96 55 086 email: rheavendors@rheavendors.com exclusive property of rheavendors group

DOOR

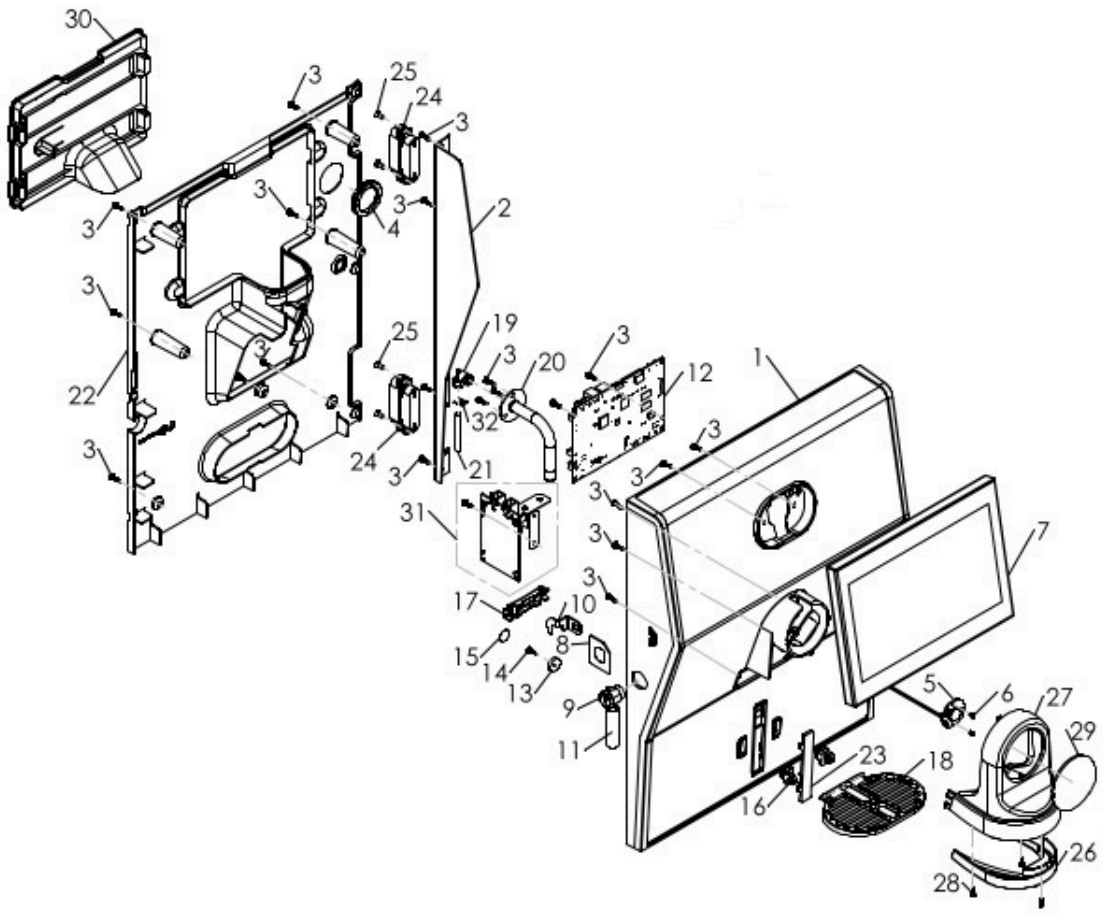

www.rheavendors.com tel: 0039 02 966 551 fax: 0039 02 96 55 086 email: rheavendors@rheavendors.com exclusive property of rheavendors group

DOOR		
Pos.	**Code**	**Description**
1/a	Z002B185034R	§ DOOR W/SPEAR
1/b	Z002B185034R1	§ DOOR W/O SPEAR
1/c	Z002B185034R2	§ BLACK DOOR W/SPEAR
1/d	Z002B185034R3	§ BLACK DOOR W/O SPEAR
2	Z002B185029NA	HINGES INTERFACE PLATE
3	VIT0002479	SCREW HEAD TAP 3,5X12
4	GUA0010503	ELECTRICAL GROMMET DG 29
5	Z002A158227	LOGO BACKLIGHTING BOARD
6	VIT0002001	SCREW ST HEAD CAP M2.9X6.5
7	Z002B185042CL-01	§TOUCH 7"
8	Z002A122018	LOCK PLATE
9	SER0000024	LOCK MM20 + KEY 3374
10	Z002B185020	LOCK PLATE
11	GUA0020028	LOCK KEY PROTECTION
12	SCHB169004	SMU BOARD
13	ELTA122003	DOOR MAGNET 16X4,5X3,2
14	VIT0002111	2.9x 13 TAPPING TCB SCREW
15	1010100199	MAGNET TRASPARENT ADHESIVE
16	Z0020039073NA	CUP SUPPORT PIN BLACK
17	Z0020039087-03IC	CUP HOLDER BRACKET
18/a	Z002B185025NA	CUP SUPPORT
18/b	Z002B222020	INOX GUIDE
19	Z0100001185	ELBOW CONNECTOR 6-1/8 INOX316L
20	Z002B185044	HOT WATER SPEAR W/O TAP
21	TTEF04/06T	PTFE PIPE 4X6
22	Z002B185024-01NA	INTERNAL COVER
23/a	Z002B185027NA	CUP SENSOR COVER
23/b	ELTB185001R	§ CUPS SENSOR
24	Z002B185021	HINGE
25	VIT0000107	SCREW COUNT FLAT HEAD M4X10
26	Z007B185007NA	LOWER NOSE COVER
27	Z002B185035XC	FRONTAL AESTHETIC NOSE
28	VIT0002064	SCREW ST HEAD CAP M2.9X9.5
29	103B185023R	§rhTT1 LOGO rhTT1 RHEA
30	Z002B185049IC	SMU COVER
31		See table RFID KIT

www.rheavendors.com tel: 0039 02 966 551 fax: 0039 02 96 55 086 email: rheavendors@rheavendors.com exclusive property of rheavendors group

mixer plan

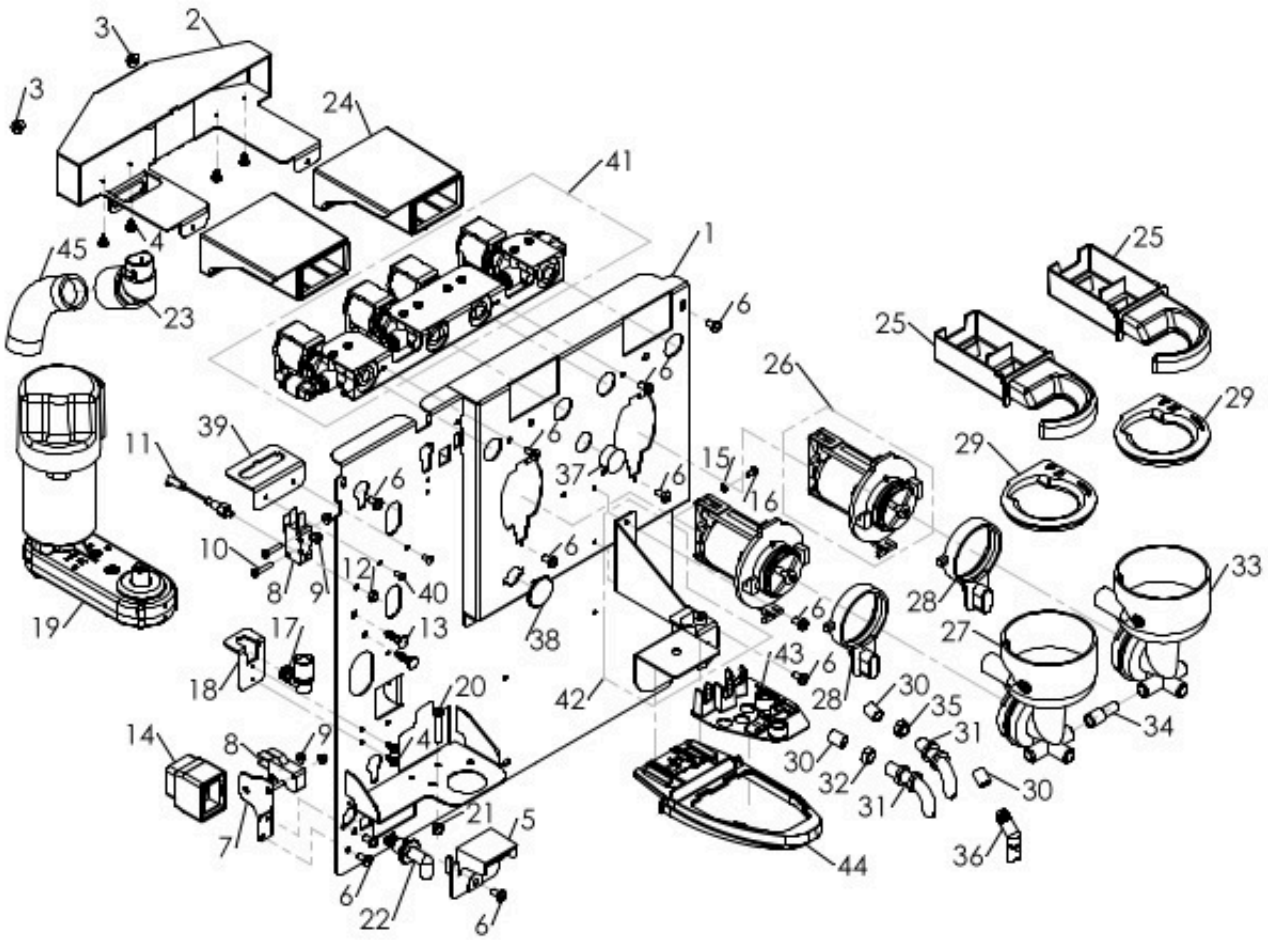

www.rheavendors.com tel: 0039 02 966 551 fax: 0039 02 96 55 086 email: rheavendors@rheavendors.com exclusive property of rheavendors group

mixer plan		
Pos.	**Code**	**Description**
1	Z026B185010	ESPRESSO MIXER PLATE
2	Z026B185025	TRAP DRAWER
3	DAM0000056	NUT M4
4	VIT0002009	SCREW ST HEAD CAP M3.5X6.5
5	Z0010020836CL	§DRIP TRAY SENSOR
6	VIT0000011	SCREW HEAD TAP CAP M4X8
7	Z026B185015	MICROSWITCH SUPPORT
8	ELE0001522	MICROSWITCH
9	VIT0004701	NUT M3
10	VIT0000006	SCREW HEAD TAP CAP M3X16
11	ELE0000932	PROBE
12	VIT0004816	NUT M4
13	ELE0062020	BOARD SUPPORT
14	ELE0000467-02	FAN HEATER 24V DC + BOARD
15	VIT0003102	SPRING WASHER 3,2
16	VIT0000002	SCREW HEAD TAP CAP M3X6
17	Z0250014084-02	FEMALE CONNECTOR
18	Z0260014009-01	H2O CONNECTOR SUPPORT
19	Z0090002250R	§ VARIFLEX BREW. GEARBOX MOTOR
20	VIT0000015	SCREW HEAD TAP CAP M4X25
21	VIT0004815	NUT M4
22	Z0080100084	90° CONNECTOR
23	Z0010025153NA	EXTRACTOR TUBE 20MM CONNECTOR
24	Z0010027214	TRAP DRAWER
25	Z008B185011PG	REMOVABLE TRAP DRAWER R5012
26		See table mixer
27	Z0080200103CPG	MIXING BOWL F.W/H20 BREAKER
28	Z0080100006IC	LOCK RING RAL2011
29	Z008B185010PG	UPPER RING RAL5012
30/a	TSIL06/09PG-10	SILICON HOSE D6X9 R5012 MT.10
30/b	TSIL06/09PG-50	SILICON HOSE D6X9 R5012 MT.50
31	Z0010020052	PRODUCT NOZZLE
32	Z0080100129	HOSE RING GREEN D.9
33	Z0080200101LPG	BLUE MIXING BOWL L.W/H20 BREAK
34	Z0080100095PG	REDUCTION
35	Z0080100130	HOSE RING BLUE D.9
36	Z0020039533	SPOUT DELIVERY 30° D.6
37	GUA0011010	PLUG
38	Z0080100035NA	CONNECTOR PLUG BLACK
39	Z001B185003	16-POLE CONNECTOR BRACKET
40	VIT0007021	BLIND RIVET 3X6
41		See table SOLUBLES VALVES
42		See table PIPES SUPPORT
43/a	Z007B185003NA	SUP. TUBE HOLDER - DOUBLE CAP.
43/b	Z007B185004NA	PIPE SUPP. NO FRESH MILK NOZZ.
44	Z007B185006NA	UNIVERSAL PIPE SUPPORT
45	TEOL000001CL	EXTRACTOR TUBE D.20 270MM

www.rheavendors.com tel: 0039 02 966 551 fax: 0039 02 96 55 086 email: rheavendors@rheavendors.com exclusive property of rheavendors group

mixer

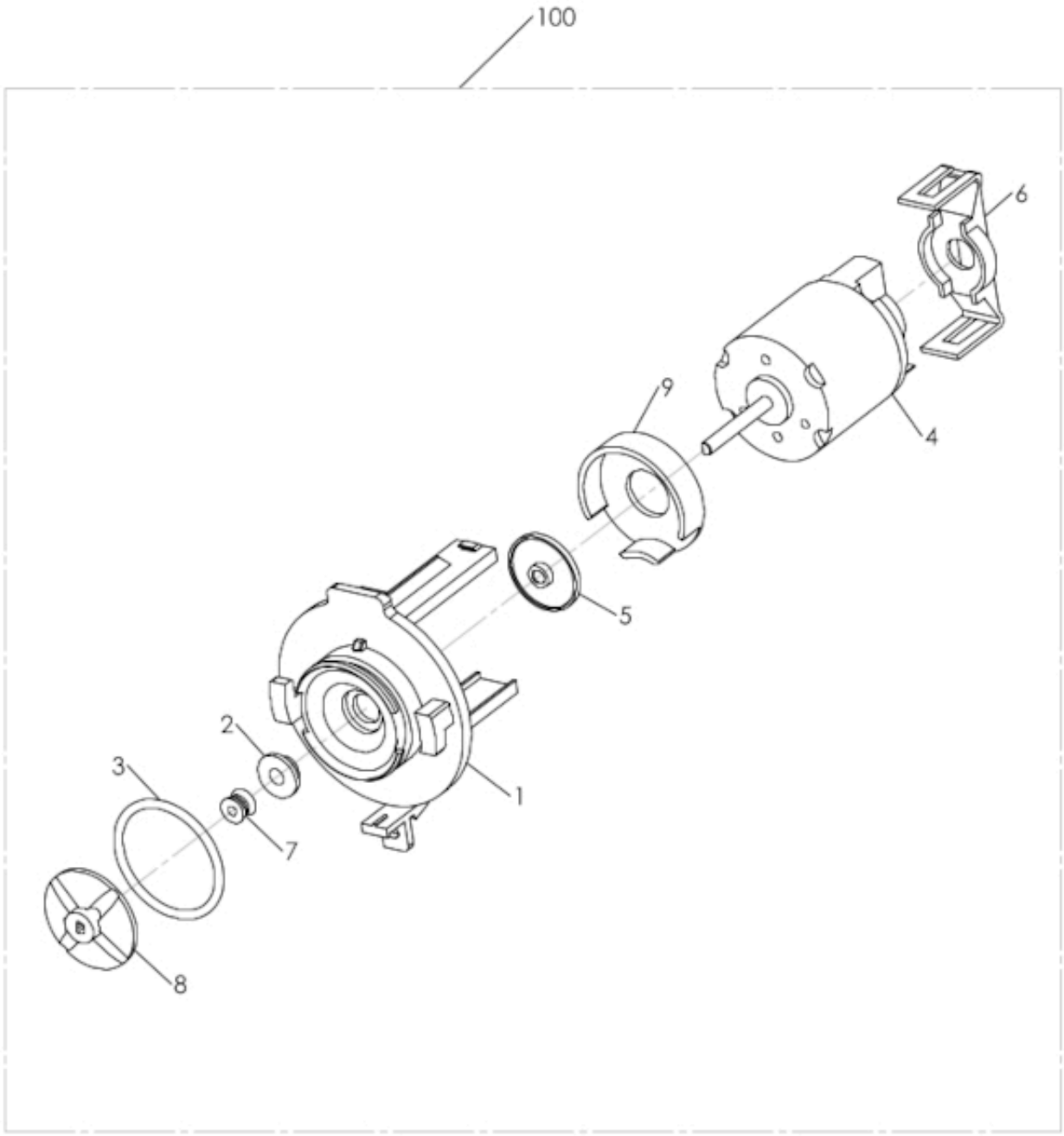

www.rheavendors.com tel: 0039 02 966 551 fax: 0039 02 96 55 086 email: rheavendors@rheavendors.com exclusive property of rheavendors group

mixer		
Pos.	**Code**	**Description**
1	Z0080100005	MOTOR MIXER BASE
2	Z0080100015	MIXER BUSH
3	GUA0000084	OR 3131 RED SILICONE A60
4	Z0090003023	MIXER MOTOR 24V DC SHAFT D.4
5	Z0080100024	MIXER FAN
6	Z0080100009IC	MIXER MOTOR SUPPORT RAL2011
7	Z0080100102	MIXER SHAFT GASKET
8	Z0080100011	MIXER FAN
9	Z0080100023IC	MIXER COVER RAL2011
100	Z0080100001R	§ MIXER BOWL BASE+MOTOR

www.rheavendors.com tel: 0039 02 966 551 fax: 0039 02 96 55 086 email: rheavendors@rheavendors.com exclusive property of rheavendors group

SOLUBLES VALVES

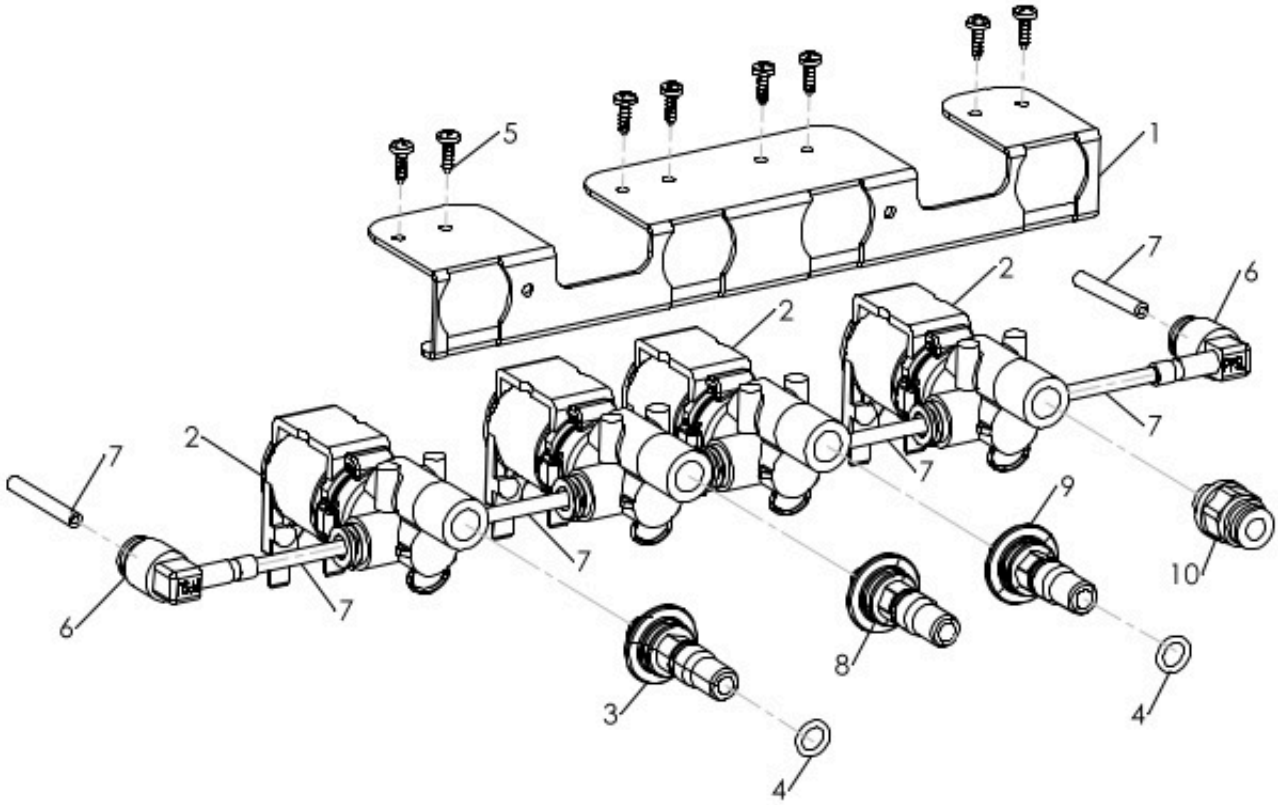

www.rheavendors.com tel: 0039 02 966 551 fax: 0039 02 96 55 086 email: rheavendors@rheavendors.com exclusive property of rheavendors group

SOLUBLES VALVES		
Pos.	**Code**	**Description**
1	Z007B185023	VALVE SUPPORT
2	Z0110001134	VALVE BLOCK 3V 2W 24V DC
3	Z008B185013MD	MIXER CONNECTOR-LONG GREEN
4	GUA0000085	OR 106 RED SILICONE A70
5	VIT0002011	SCREW ST HEAD CAP M2.9X9.5
6	Z0100001156	FITTING ELBOW D6-D6
7	TTEF04/06T	PTFE PIPE 4X6
8	Z008B185013NA	MIXER CONNECTOR-LONG BLACK
9	Z008B185013PL	MIXER CONNECTOR-LONG BLUE
10	Z0100001150	STRAIGHT CONNECTOR M G1/8 D6

www.rheavendors.com tel: 0039 02 966 551 fax: 0039 02 96 55 086 email: rheavendors@rheavendors.com exclusive property of rheavendors group

PIPES SUPPORT

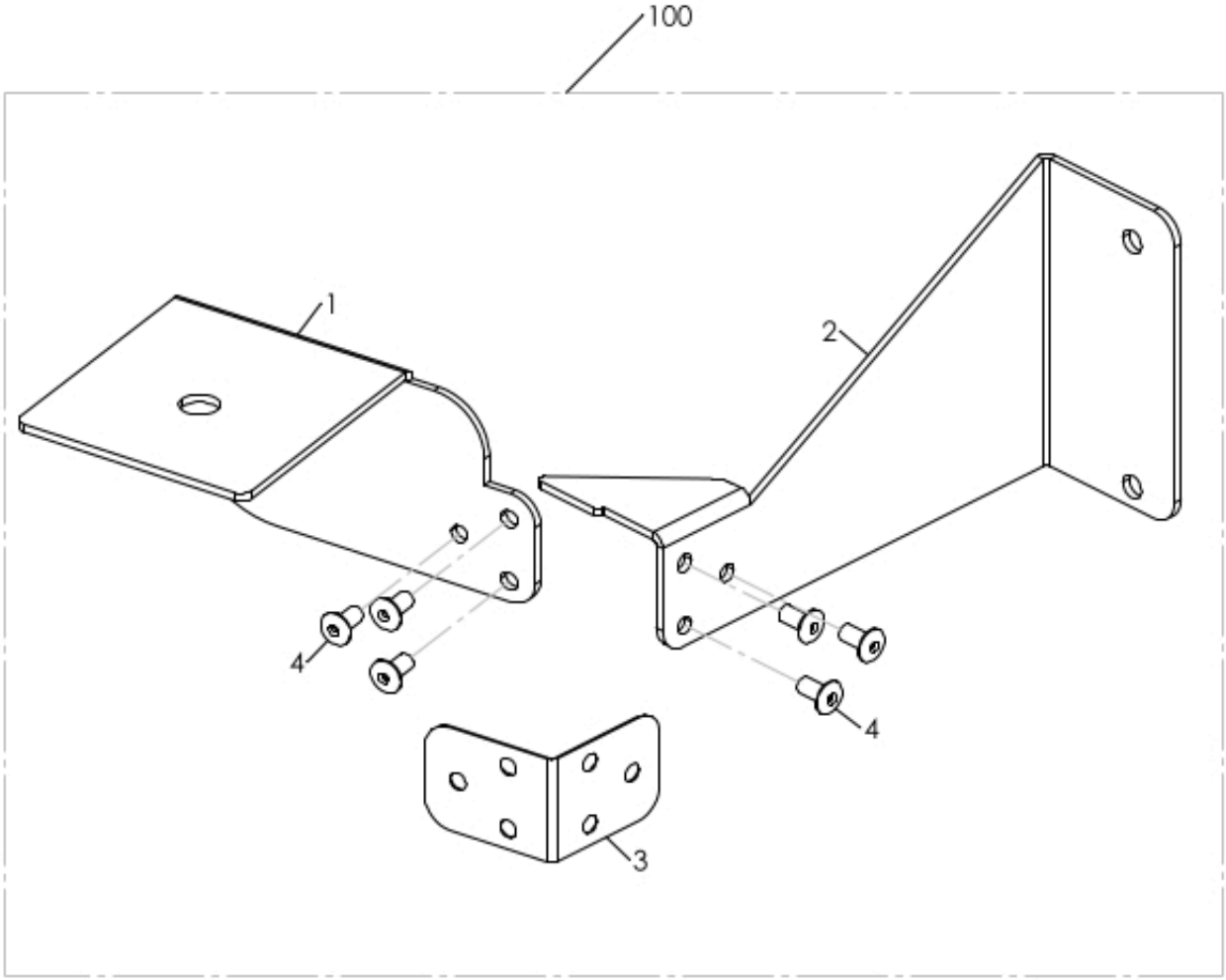

www.rheavendors.com tel: 0039 02 966 551 fax: 0039 02 96 55 086 email: rheavendors@rheavendors.com exclusive property of rheavendors group

PIPES SUPPORT		
Pos.	**Code**	**Description**
1	Z0072300190NA	MOBILE NOZZLE SUPPORT
2	Z0072300200NA	FIXED NOZZLE SUPPORT
3	Z0072300210	BAND SPRING
4	VIT0007021	BLIND RIVET 3X6
100	Z0072300290CL	§ NOZZLE SUPPORT

www.rheavendors.com tel: 0039 02 966 551 fax: 0039 02 96 55 086 email: rheavendors@rheavendors.com exclusive property of rheavendors group

HYDRIC CIRCUIT

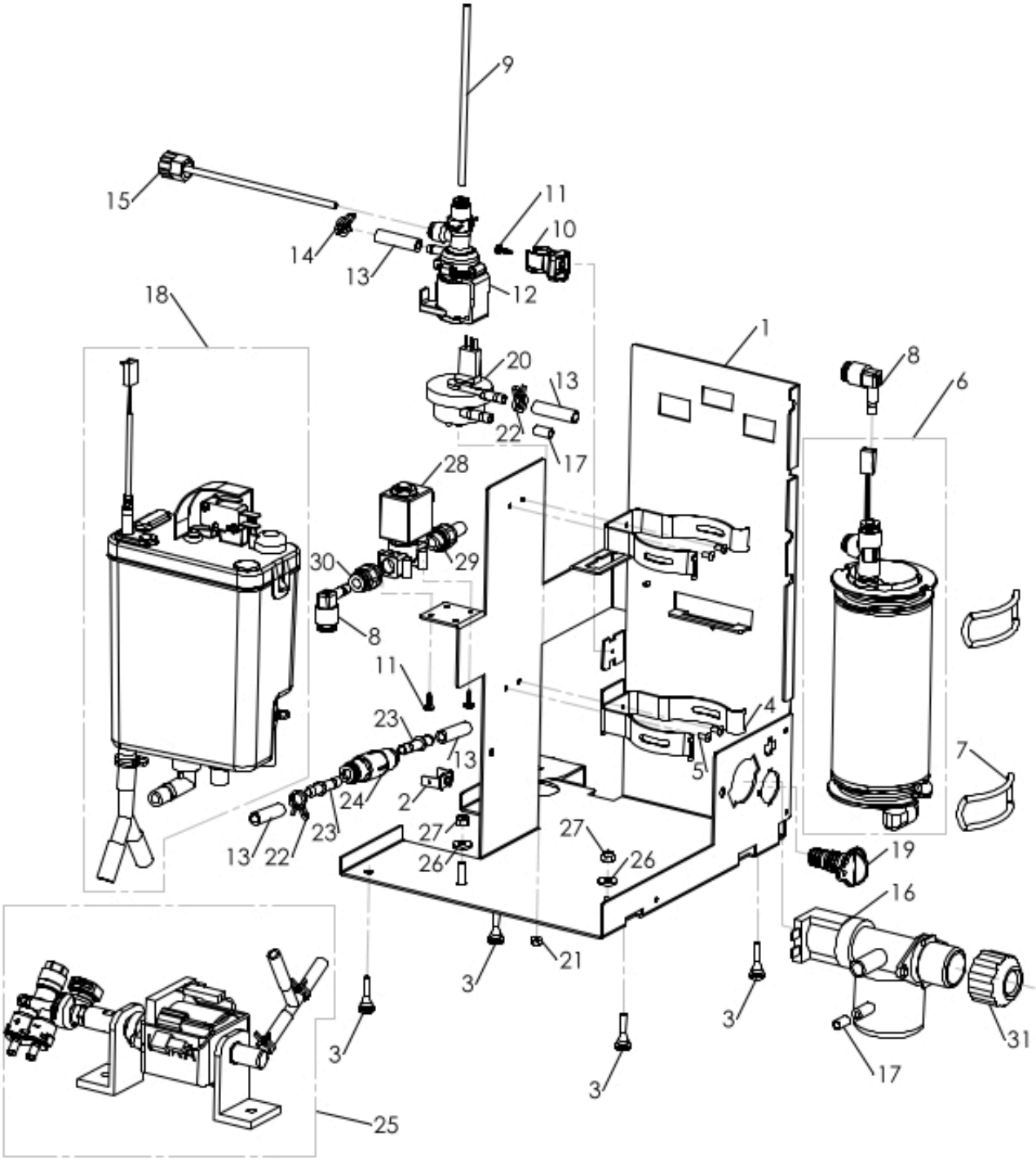

www.rheavendors.com tel: 0039 02 966 551 fax: 0039 02 96 55 086 email: rheavendors@rheavendors.com exclusive property of rheavendors group

HYDRIC CIRCUIT		
Pos.	**Code**	**Description**
1	Z060B185109	HYDRIC SUPPORT
2	ELE0060520	GROUND PIN
3	GUAA113001	BUMPER
4	Z0600019909	COIL SUPPORT SPRING
5	VIT0007021	BLIND RIVET 3X6
6		See table VARITHERM
7	GUA0000067	OR 4143 RED SILICONE LSR70
8	Z0100001156	FITTING ELBOW D6-D6
9	TTEF02/04T	PTFE PIPE 2X4
10	Z060B185111NA	3 WAYS SUPPORT
11	VIT0002011	SCREW ST HEAD CAP M2.9X9.5
12	Z011B185023	VALVE 3/2 24V+BOARD PWM
13/a	TSIL05/08T-10	SILICON HOSE 5X8 MT.10
13/b	TSIL05/08T-50	SILICON HOSE 5X8 MT.50
14	FASC000111	TUBE FIXING CLIP
15	Z0250014086R7	§WATER INLET TUBE 0,09 mt
16	Z0110001058	WATER INLET VALVE 24V DC
17/a	TSIL04/06T-10	SILICON HOSE 4X6 MT.10
17/b	TSIL04/06T-50	SILICON HOSE 4X6 MT.50
18		See table water inlet panel
19	Z0600016455	H2O OUTLET PLUG
20	Z0110007003	VOLUMETRIC COUNTER
21	VIT0004701	NUT M3
22	FASC000105	CLAMP
23	Z0100001237	STRAIGHT STEM CONNECTOR
24	Z011B185001	NO RETURN VALVE
25		See table COFFEE PUMP
26	VIT0003301	WASHER 4,3X12X1,5
27	VIT0004815	NUT M4
28	Z0110001140	VALVE 2W 24V DC 6W
29	Z0100001137-01	ADAPTOR CYLINDRICAL G1/8 D.8
30	Z0100001150	STRAIGHT CONNECTOR M G1/8 D6
31	Z0100006001-01	F/F CYLINDRIC 3/4-3/8 REDUCT.

www.rheavendors.com tel: 0039 02 966 551 fax: 0039 02 96 55 086 email: rheavendors@rheavendors.com exclusive property of rheavendors group

VARITHERM

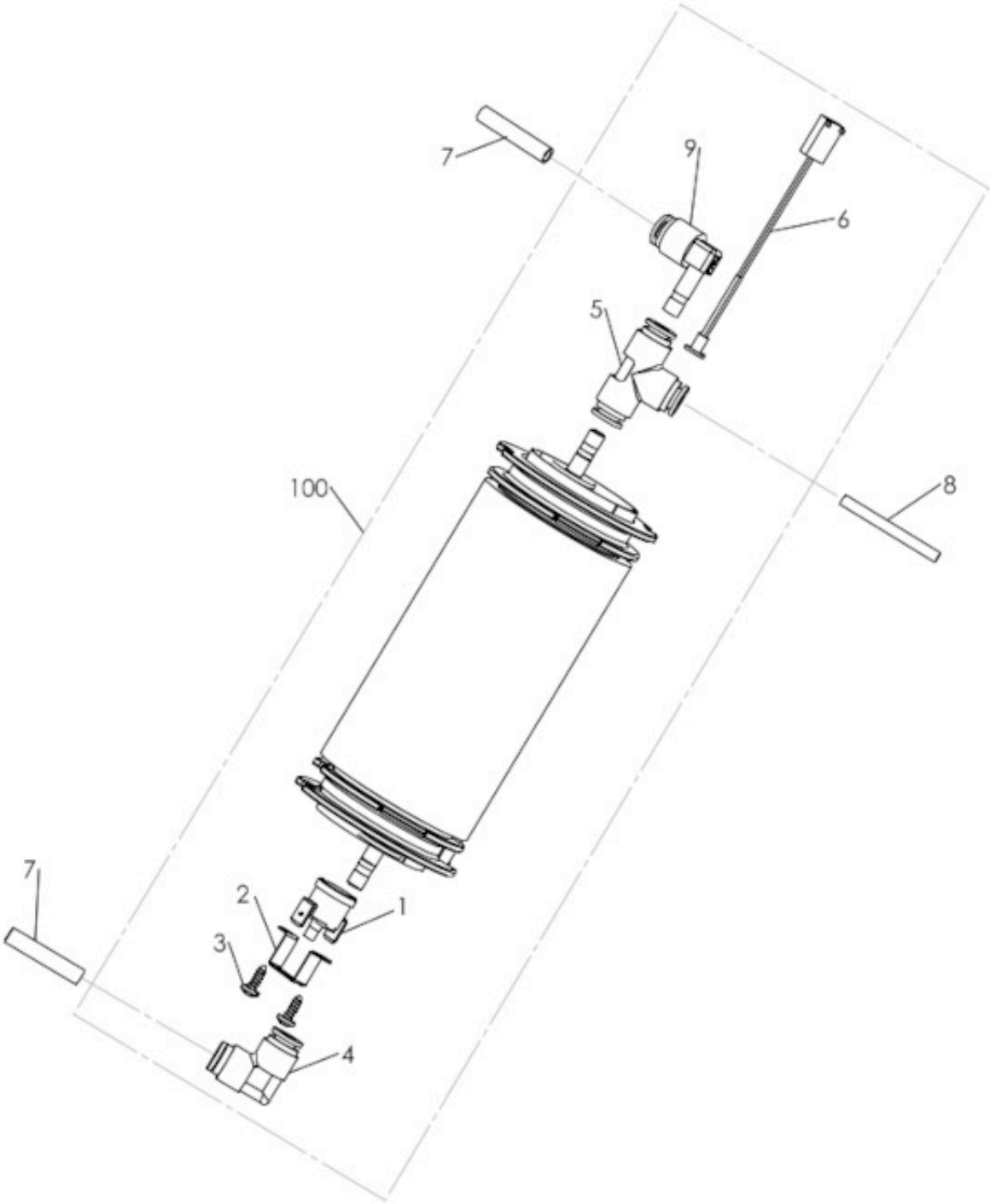

www.rheavendors.com tel: 0039 02 966 551 fax: 0039 02 96 55 086 email: rheavendors@rheavendors.com exclusive property of rheavendors group

VARITHERM		
Pos.	**Code**	**Description**
1	ELE0000987	CLIXSON 105°
2	ELE0000988	THERMOSTAT BRACKET
3	VIT0002015	SCREW ST HEAD CAP M3.5X9.5
4	Z0100001158	FITTING ELBOW D6-D6
5	Z0100001241	T CONNECTOR
6	ELE0000986	PROBE
7	TTEF04/06T	PTFE PIPE 4X6
8	TTEF02/04T	PTFE PIPE 2X4
9	Z0100001156	FITTING ELBOW D6-D6
100	Z0600019900R4	§VARITHERM INDUCTION SYS.rhTT1

www.rheavendors.com tel: 0039 02 966 551 fax: 0039 02 96 55 086 email: rheavendors@rheavendors.com exclusive property of rheavendors group

water inlet panel

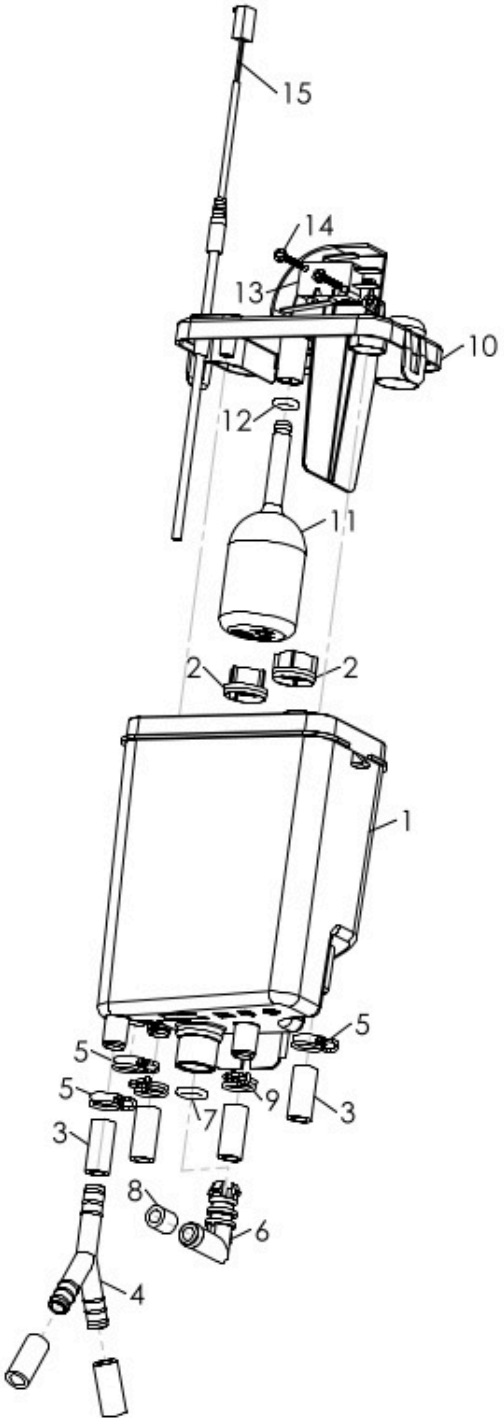

www.rheavendors.com tel: 0039 02 966 551 fax: 0039 02 96 55 086 email: rheavendors@rheavendors.com exclusive property of rheavendors group

water inlet panel		
Pos.	**Code**	**Description**
1	Z0800013041	AIR BREAK TANK
2	Z0110020007	PLASTIC FILTER DIAM. 20
3/a	TSIL07/11T-10	SILICON HOSE 7X11 MT.10
3/b	TSIL07/11T-50	SILICON HOSE 7X11 MT.50
4	Z0100001065	CONNECTOR "Y"
5	FASC000109	CLAMP
6	Z0800009211	ELBOW CONNECTOR
7	GUA0000043	OR 109 NBR AL 75 BLACK
8/a	TSIL06/11T-10	SILICON HOSE 6X11 MT.10
8/b	TSIL06/11T-50	SILICON HOSE 6X11 MT.50
9	FASC000113	CLAMP
10	Z0800013043	AIR BREAK COVER
11	Z0800013046	AIR BREAK WASTE FLOAT
12	GUA0000082	SILICON GASKET D.6
13	ELE0001514	MICROSWITCH 3A 125-250VA
14	VIT0002013	SCREW ST HEAD CAP M2.9X19
15	ELE0000985	PROBE 135xD.4

www.rheavendors.com tel: 0039 02 966 551 fax: 0039 02 96 55 086 email: rheavendors@rheavendors.com exclusive property of rheavendors group

COFFEE PUMP

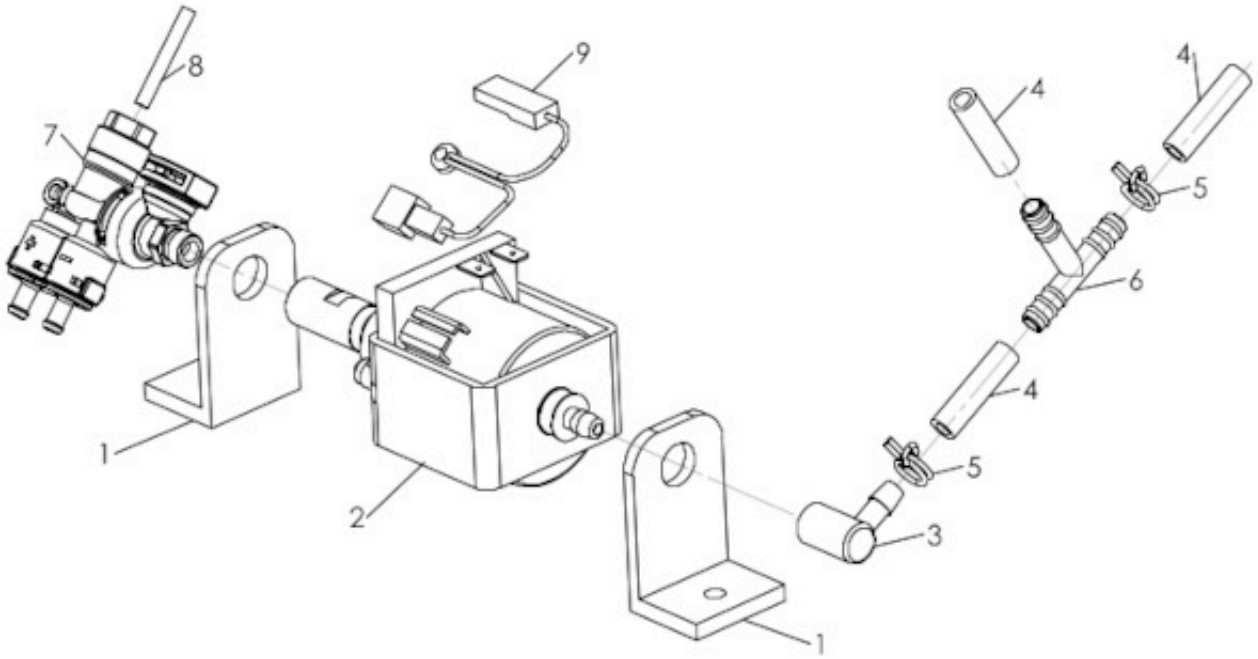

www.rheavendors.com tel: 0039 02 966 551 fax: 0039 02 96 55 086 email: rheavendors@rheavendors.com exclusive property of rheavendors group

COFFEE PUMP		
Pos.	**Code**	**Description**
1	Z0110004022	SUPPORT
2	Z0110004065	PUMP PLUS PGØ7 230V-50HZ
3	Z0110004023	CONNECTOR
4/a	TSIL05/08T-10	SILICON HOSE 5X8 MT.10
4/b	TSIL05/08T-50	SILICON HOSE 5X8 MT.50
5	FASC000105	CLAMP
6	Z0100003022	T CONNECTOR 461 TS UL
7	Z0110001151R	VALVE 3W W/BY-PASS 11BAR
8	TTEF04/06T	PTFE PIPE 4X6
9	ELE0000915	PUMP THERMOPROTECTOR

www.rheavendors.com tel: 0039 02 966 551 fax: 0039 02 96 55 086 email: rheavendors@rheavendors.com exclusive property of rheavendors group

GRINDER

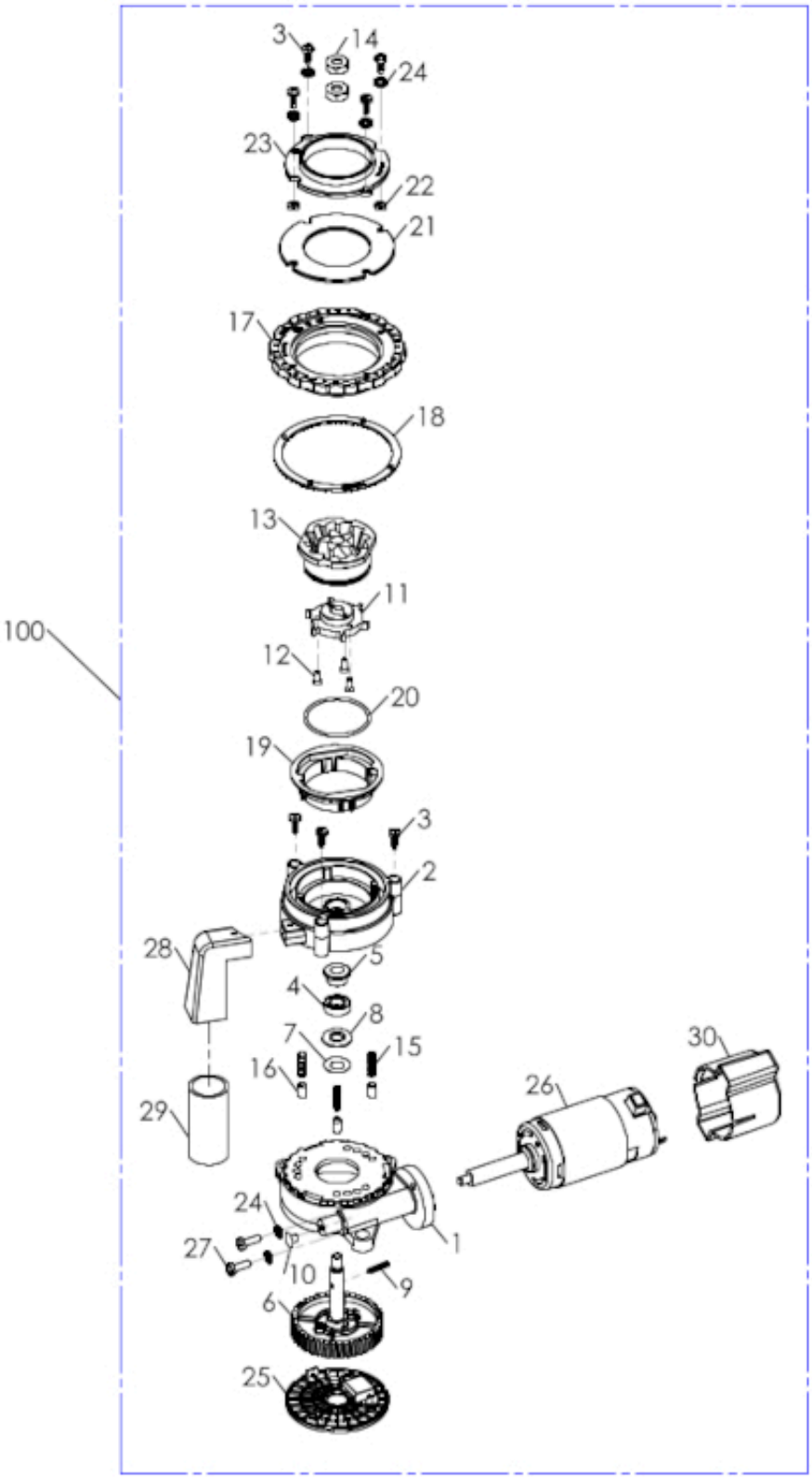

www.rheavendors.com tel: 0039 02 966 551 fax: 0039 02 96 55 086 email: rheavendors@rheavendors.com exclusive property of rheavendors group

GRINDER		
Pos.	**Code**	**Description**
1	Z0320001639NA	MOTOR SUPPORT (BLACK)
2	Z0320001602NA	GRINDER BLADES SUPPORT
3	VIT0002469	SCREW HEAD TAP M3.5X10
4	VIT0009325	BEARING
5	Z0320001641	BUSHING
6	Z0320001608	§ WHEEL+SHAFT
7	Z0320001629	CUP SPRING 16x8,2 SP. 0,4
8	Z0320001625	BUSH
9	Z0320001704	GRINDER ROTATION PIN REINFORCE
10	GUA0011023	PLUG (BLACK)
11	Z0320001636	EJECTOR
12	VIT0000121	SCREW COUNT FLAT HEAD M3X8
13	Z0320001680	CONIC BLADES PLUS
14	Z0320001642	LOWER GRINDER FIXING NUT
15	Z0320001643	SPRING D.4X15X0,6
16	Z0320001624	REGULATION PIN
17	Z0320001605NA	GRINDER REGULATION RING BLACK
18	Z0320001606NA	REGULATION RING (BLACK)
19	Z0320001635-03NA	GRINDER SUPPORT BLACK
20	GUA0000124	SILICONE OR 2137
21	Z0320001622	UPPER GRINDER FIXING
22	Z0320001666	SPACER D.4x7x2
23	Z0320001607NA	DUCT BLACK
24	VIT0003103	SPRING WASHER 4,3
25	Z0320001604NA	PLUG BLACK
26	Z0090003047	GRINDER MOTOR 230V DC
27	VIT0000013	SCREW HEAD TAP CAP M4X12
28	Z032B185001IC	GRINDER CHUTE
29	TSIL15/19PG-50	SILICON HOSE 15X19 R5012 MT.50
30	Z0320001615NA	GRINDER SENSOR COVER BLACK
100	Z0320001601CLL	GRINDER VRFX BREWER PLUS
101	Z0320001601CLLC	GRINDER VRFX PREGRINDED PLUS

www.rheavendors.com tel: 0039 02 966 551 fax: 0039 02 96 55 086 email: rheavendors@rheavendors.com exclusive property of rheavendors group

VARIGRIND

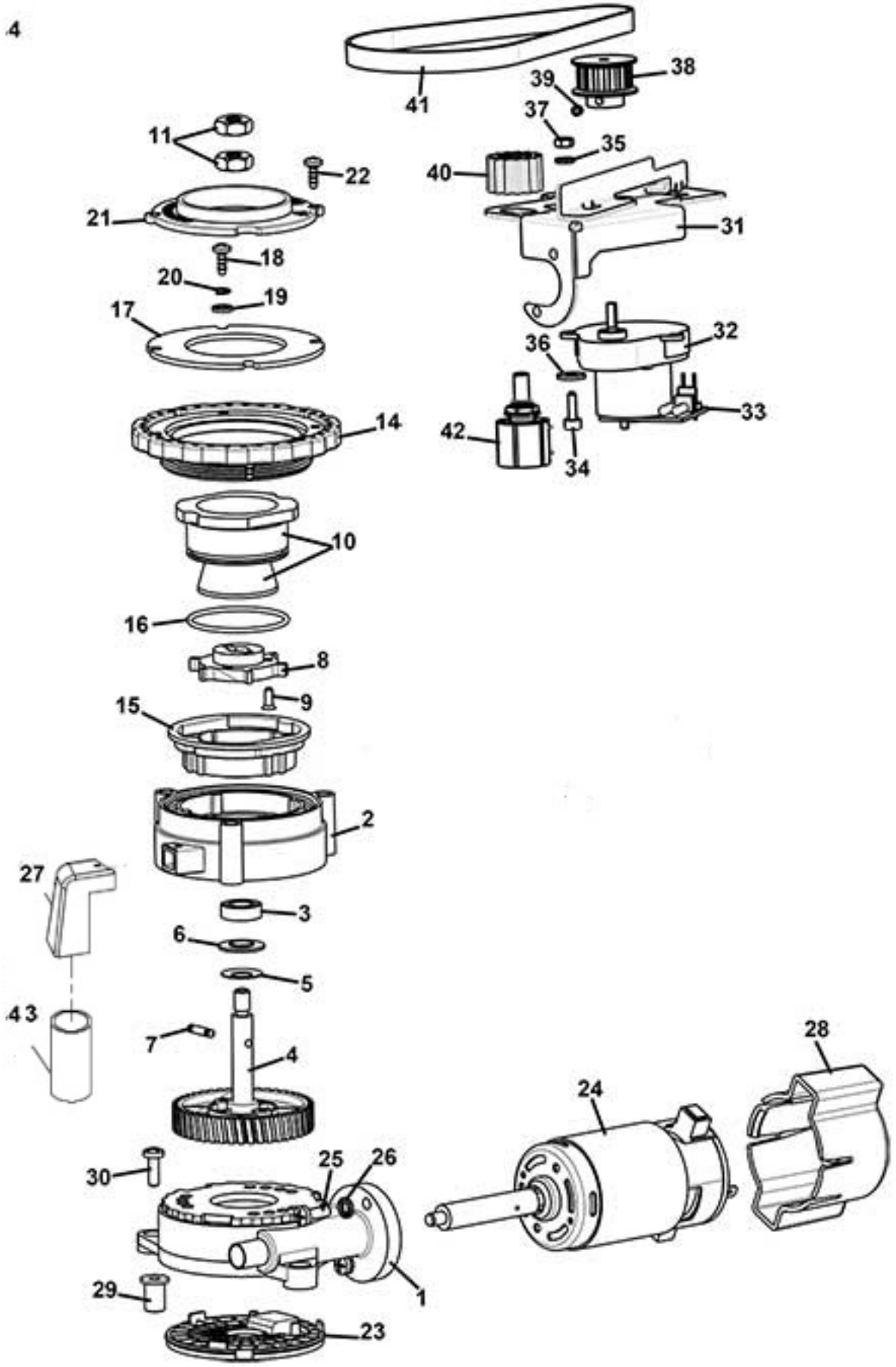

www.rheavendors.com tel: 0039 02 966 551 fax: 0039 02 96 55 086 email: rheavendors@rheavendors.com exclusive property of rheavendors group

VARIGRIND		
Pos.	**Code**	**Description**
1	Z0320001639NAR	§ MOTOR SUPPORT BLACK+PLUG
2	Z0320001602NAR	GRINDER BLADES SUPPORT
3	VIT0009325	BEARING
4	Z0320001608R	§ WHEEL+SHAFT+MAGNETS
5	Z0320001629	CUP SPRING 16x8,2 SP. 0,4
6	Z0320001625	BUSH
7	Z0320001704	GRINDER ROTATION PIN REINFORCE
8	Z0320001636	EJECTOR
9	VIT0000121	SCREW COUNT FLAT HEAD M3X8
10	Z0320001680	CONIC BLADES PLUS
11	Z0320001642	LOWER GRINDER FIXING NUT
14	Z0320001663NA	GRINDER REGULATION RING BLACK
15	Z0320001635-03NA	GRINDER SUPPORT BLACK
16	GUA0000124	SILICONE OR 2137
17	Z0320001622	UPPER GRINDER FIXING
18	VIT0002469	SCREW HEAD TAP M3.5X10
19	Z0320001666	SPACER D.4x7x2
20	VIT0003103	SPRING WASHER 4,3
21	Z0320001607NA	DUCT BLACK
22	VIT0002469	SCREW HEAD TAP M3.5X10
23	Z0320001604NA	PLUG BLACK
24	Z0090003047	GRINDER MOTOR 230V DC
25	VIT0000013	SCREW HEAD TAP CAP M4X12
26	VIT0003103	SPRING WASHER 4,3
27	Z032B185001IC	GRINDER CHUTE
28	Z0320001615NA	GRINDER SENSOR COVER BLACK
29	Z0320001628	NO-VIBRATION BUSH
30	VIT0000012	SCREW HEAD TAP CAP M4X10
31	Z0320001672	GRINDER GEARBOX MOTOR SUPPORT
32	Z0090002042R	§ GEAR MOTOR 2,2RPM24VDC+FILT
33	SCH0003740	MOTOR FILTER
34	VIT0005519	SCREW TCEI 4x12 STAIL STEEL
35	VIT0003103	SPRING WASHER 4,3
36	VIT0003301	WASHER 4,3X12X1,5
37	VIT0004803	NUT M4
38	Z0320001654	GRINDER PULLEY
39	VIT0007011	SET SCREW 4X4
40	Z0320001670	PULLEY POTENTIOMETER
41	Z0320001657	GRINDER BELT
42	CBLXS00317	VARIGRINDER WIRING
43	TSIL15/19PG-50	SILICON HOSE 15X19 R5012 MT.50
100	Z0320001671CLL	§VARIGRINDER VARIFLEX
101	Z0320001670R	§PULLEY POTENTIOMETER+WIRING

www.rheavendors.com tel: 0039 02 966 551 fax: 0039 02 96 55 086 email: rheavendors@rheavendors.com exclusive property of rheavendors group

GRINDER COVER

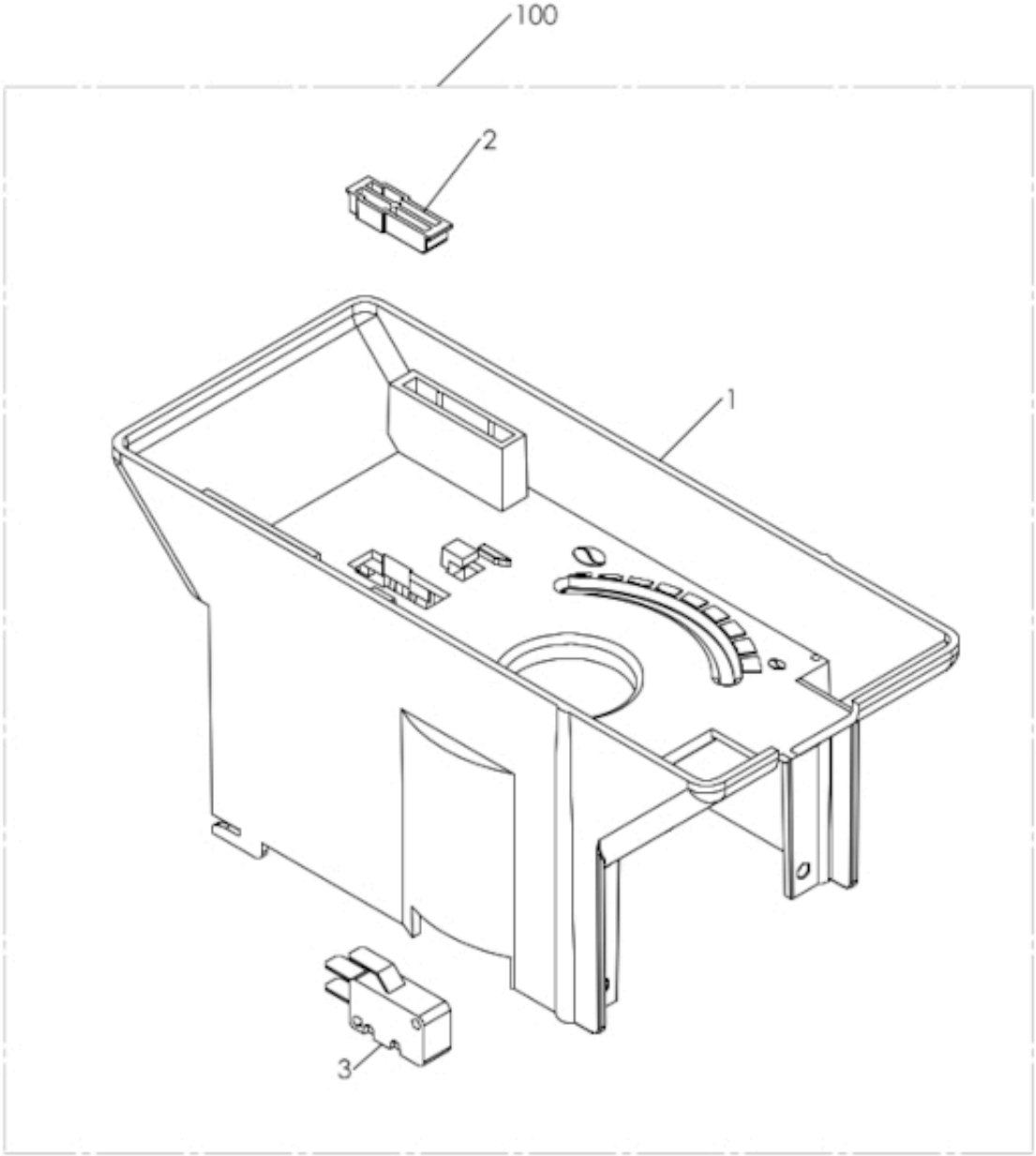

www.rheavendors.com tel: 0039 02 966 551 fax: 0039 02 96 55 086 email: rheavendors@rheavendors.com exclusive property of rheavendors group

GRINDER COVER		
Pos.	**Code**	**Description**
1	Z0232300002	GRINDER COVER
2	Z0230015307NA	BUTTON BLACK
3	CBLB185022	MICRO SWITCH W/CABLE
100	Z0230015301CL3	§GIRNDER COVER

www.rheavendors.com tel: 0039 02 966 551 fax: 0039 02 96 55 086 email: rheavendors@rheavendors.com exclusive property of rheavendors group

PROFESSIONAL BREWER GROUP D.36

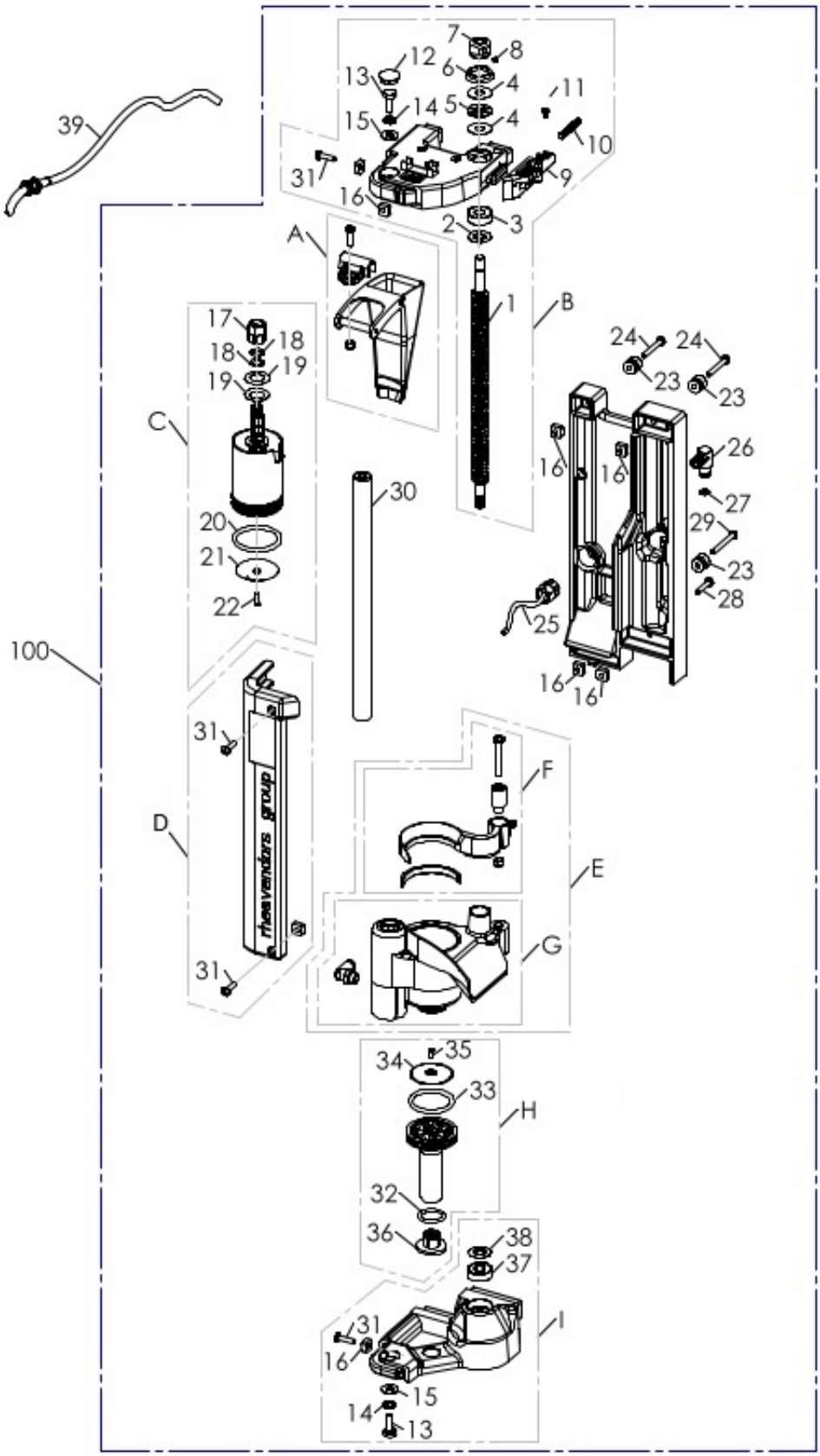

www.rheavendors.com tel: 0039 02 966 551 fax: 0039 02 96 55 086 email: rheavendors@rheavendors.com exclusive property of rheavendors group

PROFESSIONAL BREWER GROUP D.36		
Pos.	**Code**	**Description**
A	Z0250014033R	§ CHUTE D. 36
B	Z0250014005R2	§UPPER SUPPORT WITHOUT CHUTE
C	Z0250014040R	§ UPPER FILTER HOLDER D.36
D	Z0250014019R	§ FRONTAL COVER
E	Z0250014030R	§ CHAMBER D.36
F	Z0250014034R	§ BRUSH D.36
G	Z0250014032R	§ INFUSION CHAMBER D.36
H	Z0250014038R	§ LOWER FILTER HOLDER D.36
I	Z0250014012R	§ LOWER SUPPORT
1	Z0250014016	SCREW 14x4
2	Z0250014077	SPACER
3	VIT0009320	BEARING
4	VIT0009318	SPACER WASHER
5	VIT0009317	BEARING
6	GUA0001007	V RING GASKET VA16
7	Z0250014071	NUT M8
8	VIT0007011	SET SCREW 4X4
9	Z0250014082	BREWER STOPPER BUTTON
10	Z0250014081	SPRING
11	VIT0002009	SCREW ST HEAD CAP M3.5X6.5
12	GUA0011022	PLUG
13	VIT0000249	SCREW HEX HEAD M6X16
14	VIT0003113	SPRING WASHER 6,4
15	Z0250014079	WASHER D.15 D.6,5 SP.1,5
16	VIT0009112	NUT M4
17	Z0250014086	NUT
18	GUA0000045	OR 108 VITON 80 BLACK
19	Z0250014048	SPRING
20	GUA0000080	OR 4112 RED SILICONE LSR70
21	Z0250008099	COFFEE FILTER 33,4
22	VIT0000129	SCREW COUNT HEAD M3X12
23	Z0250014072	PIN
24	VIT0001006	SCREW HEAD TAP CAP M4X30
25	Z0250014086R1	§WATER INLET TUBE 0,119 mt
26	Z0250014085	MALE CONNECTOR
27	GUA0000004	OR 104 NBR AL 75 BLACK
28	VIT0001011	SCREW HEAD TAP CAP M4X20
29	VIT0000033	SCREW HEAD TAP CAP M4X35
30	Z0250014013-04	CYLINDRICAL GUIDE
31	VIT0001009	SCREW HEAD TAP CAP M4X16
32	GUA0000103	OR 3075 SILICON
33	GUA0000080	OR 4112 RED SILICONE LSR70
34	Z0250008019	COFFEE FILTER
35	VIT0000121	SCREW COUNT FLAT HEAD M3X8
36	Z0250014027	LOWER PISTON LOCK
37	VIT0009320	BEARING
38	Z0250014077	SPACER

www.rheavendors.com tel: 0039 02 966 551 fax: 0039 02 96 55 086 email: rheavendors@rheavendors.com exclusive property of rheavendors group

PROFESSIONAL BREWER GROUP D.36		
39	Z0250008176CL9	§ COFFEE OUTLET PIPE R5012
100	Z0250014060CL	§ COFFEE BREWER VARIFLEX D.36
101	Z0250014082R	§ BUTTON EXTRACTION+SPRING Include pos. 9+10+11

www.rheavendors.com tel: 0039 02 966 551 fax: 0039 02 96 55 086 email: rheavendors@rheavendors.com exclusive property of rheavendors group

PROFESSIONAL BREWER GROUP D.45

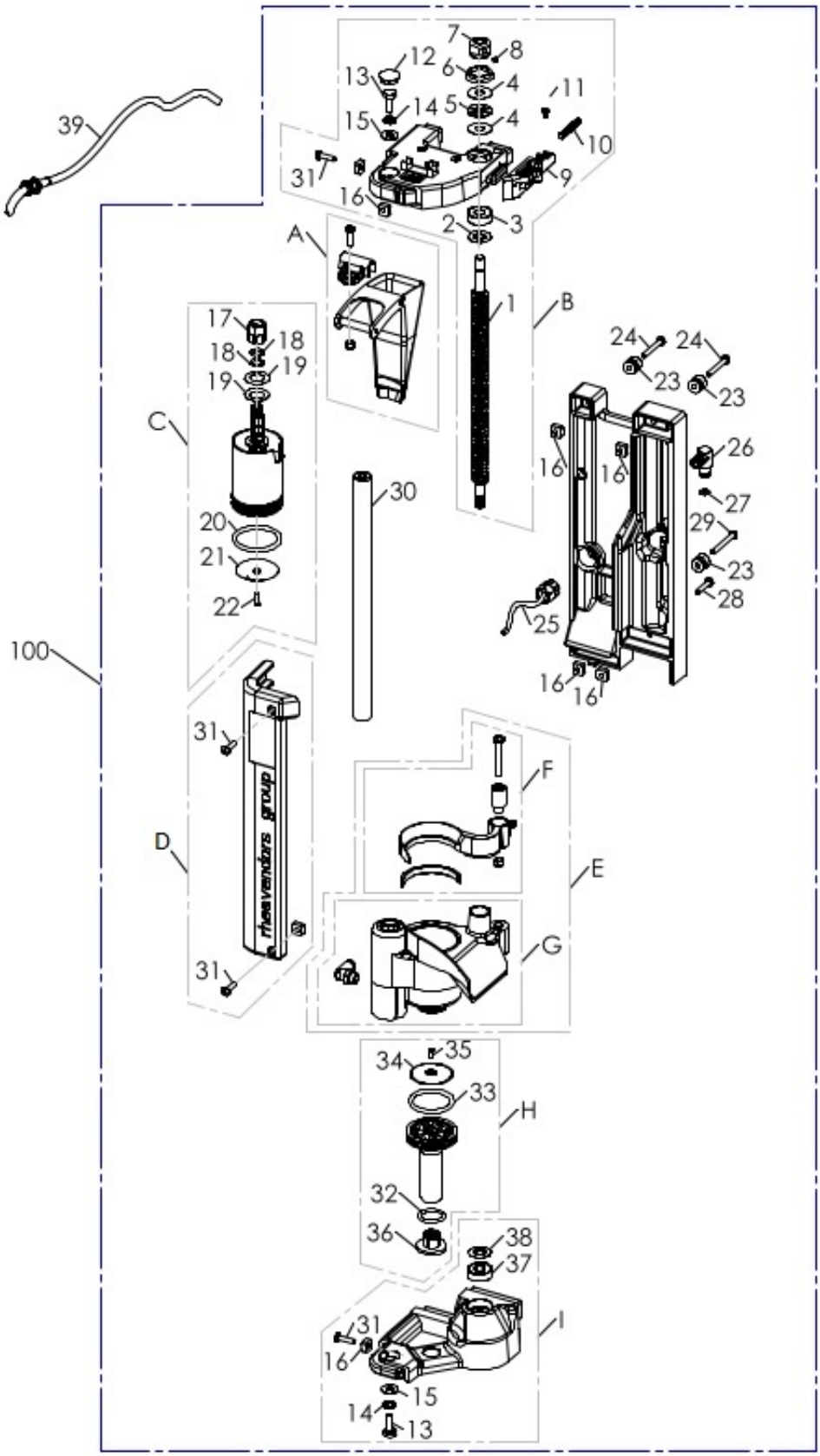

www.rheavendors.com tel: 0039 02 966 551 fax: 0039 02 96 55 086 email: rheavendors@rheavendors.com exclusive property of rheavendors group

PROFESSIONAL BREWER GROUP D.45		
Pos.	**Code**	**Description**
A	Z0250014008R	§ CHUTE D. 45
B	Z0250014005R2	§UPPER SUPPORT WITHOUT CHUTE
C	Z0250014045R	§ UPPER FILTER HOLDER D.45
D	Z0250014019R	§ FRONTAL COVER
E	Z0250014020R	§ INFUSION CHAMBER D.45
F	Z0250014024R	§ BRUSH D.45
G	Z0250014022R	§ INFUSION CHAMBER D.45
H	Z0250014028R	§ LOWER FILTER HOLDER D.45
I	Z0250014012R	§ LOWER SUPPORT
1	Z0250014016	SCREW 14x4
2	Z0250014077	SPACER
3	VIT0009320	BEARING
4	VIT0009318	SPACER WASHER
5	VIT0009317	BEARING
6	GUA0001007	V RING GASKET VA16
7	Z0250014071	NUT M8
8	VIT0007011	SET SCREW 4X4
9	Z0250014082	BREWER STOPPER BUTTON
10	Z0250014081	SPRING
11	VIT0002009	SCREW ST HEAD CAP M3.5X6.5
12	GUA0011022	PLUG
13	VIT0000249	SCREW HEX HEAD M6X16
14	VIT0003113	SPRING WASHER 6,4
15	Z0250014079	WASHER D.15 D.6,5 SP.1,5
16	VIT0009112	NUT M4
17	Z0250014086	NUT
18	GUA0000045	OR 108 VITON 80 BLACK
19	Z0250014048	SPRING
20	GUA0000067	OR 4143 RED SILICONE LSR70
21	Z0250008211	COFFEE FILTER 37,3
22	VIT0000129	SCREW COUNT HEAD M3X12
23	Z0250014072	PIN
24	VIT0001006	SCREW HEAD TAP CAP M4X30
25	Z0250014086R1	§WATER INLET TUBE 0,119 mt
26	Z0250014085	MALE CONNECTOR
27	GUA0000004	OR 104 NBR AL 75 BLACK
28	VIT0001011	SCREW HEAD TAP CAP M4X20
29	VIT0000033	SCREW HEAD TAP CAP M4X35
30	Z0250014013-04	CYLINDRICAL GUIDE
31	VIT0001009	SCREW HEAD TAP CAP M4X16
32	GUA0000103	OR 3075 SILICON
33	GUA0000097	OR 4131 RED SILICONE LSR70
34	Z0250014029	COFFEE FILTER DIAM. 37.3
35	VIT0000121	SCREW COUNT FLAT HEAD M3X8
36	Z0250014027	LOWER PISTON LOCK
37	VIT0009320	BEARING
38	Z0250014077	SPACER

www.rheavendors.com tel: 0039 02 966 551 fax: 0039 02 96 55 086 email: rheavendors@rheavendors.com exclusive property of rheavendors group

PROFESSIONAL BREWER GROUP D.45		
39	Z0250008176CL9	§ COFFEE OUTLET PIPE R5012
100	Z0250014000CL	COFFEE BREWER VARIFLEX D 45
101	Z0250014082R	§ BUTTON EXTRACTION+SPRING Include pos. 9+10+11

www.rheavendors.com tel: 0039 02 966 551 fax: 0039 02 96 55 086 email: rheavendors@rheavendors.com exclusive property of rheavendors group

control panel

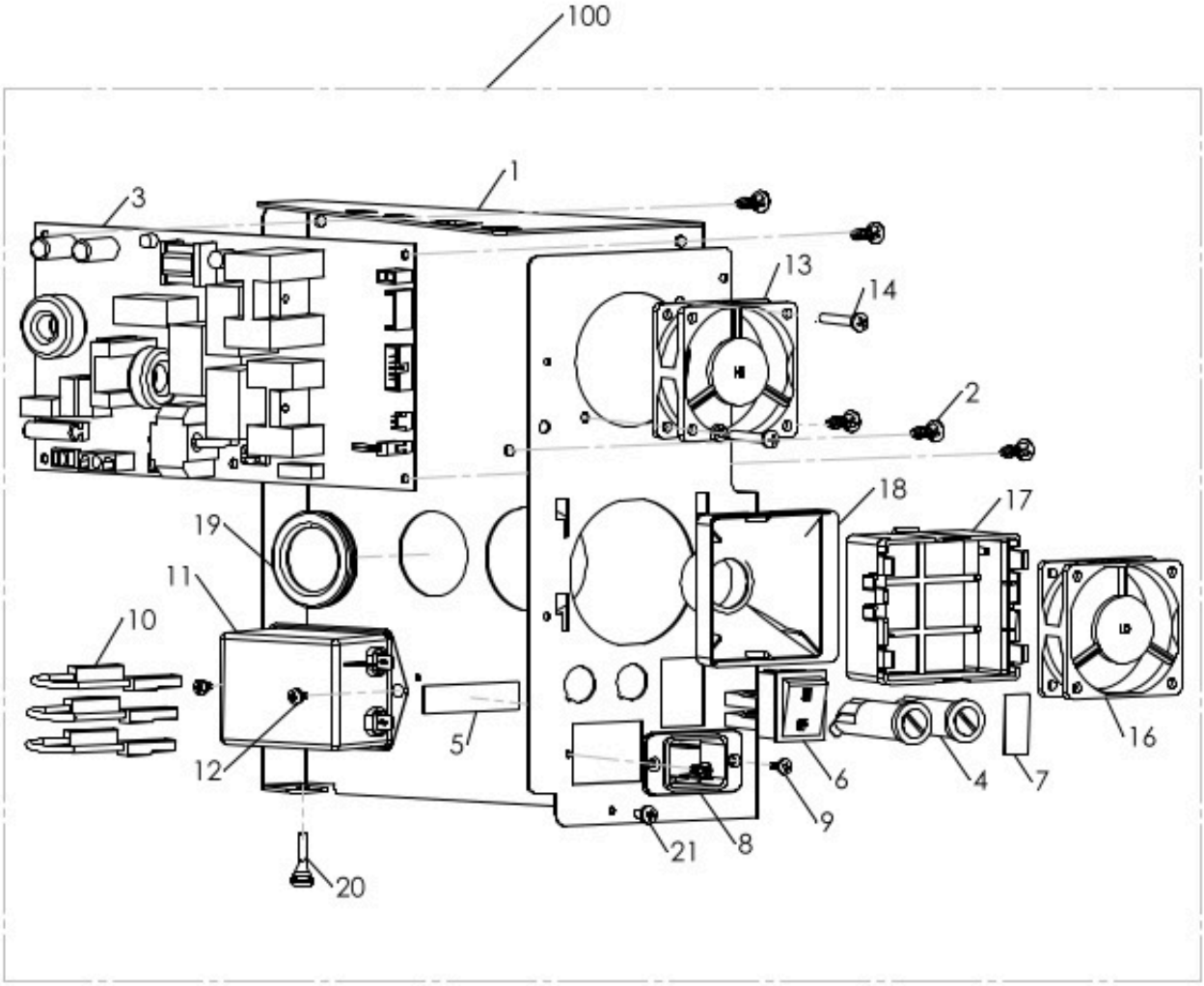

www.rheavendors.com tel: 0039 02 966 551 fax: 0039 02 96 55 086 email: rheavendors@rheavendors.com exclusive property of rheavendors group

control panel		
Pos.	**Code**	**Description**
1	Z013B185022	ELECT.COMPONENT SUPPORT
2	ELE0062020	BOARD SUPPORT
3	SCH0009864	VARITHERM BOARD_3
4	ELE0003509CL1	FUSE HOLDER+FUSE 16A
5	1010100212	FUSE F 16A LABEL
6	ELE0002020	BIPOLAR SWITCH 20A 250V
7	1010100149	230V LABEL
8	ELE0002350	MAINS SOCKET 16A
9	VIT0002010	SCREW ST HEAD CAP M3.5X9.5
10	CBLXS00009	THERMOSTAT EXTENSION WIRING
11	ELE0009066	NOISE FILTER 16A
12	VIT0002009	SCREW ST HEAD CAP M3.5X6.5
13	ELE0000461	FAN 24V DC-HIGH SPEED
14	VIT0002115	SCREW TSP 4,8X16
16	ELE0000462	FAN 24V DC-LOW SPEED
17	Z0010027064	FAN SUPPORT
18	Z0010027065	FAN CONNECTOR
19	GUA0010503	ELECTRICAL GROMMET DG 29
20	GUAA113001	BUMPER
21	VIT0000011	SCREW HEAD TAP CAP M4X8
100	Z013B185022CL	§ELET. PANEL 16A rhTT1 E IND

www.rheavendors.com tel: 0039 02 966 551 fax: 0039 02 96 55 086 email: rheavendors@rheavendors.com exclusive property of rheavendors group

products container

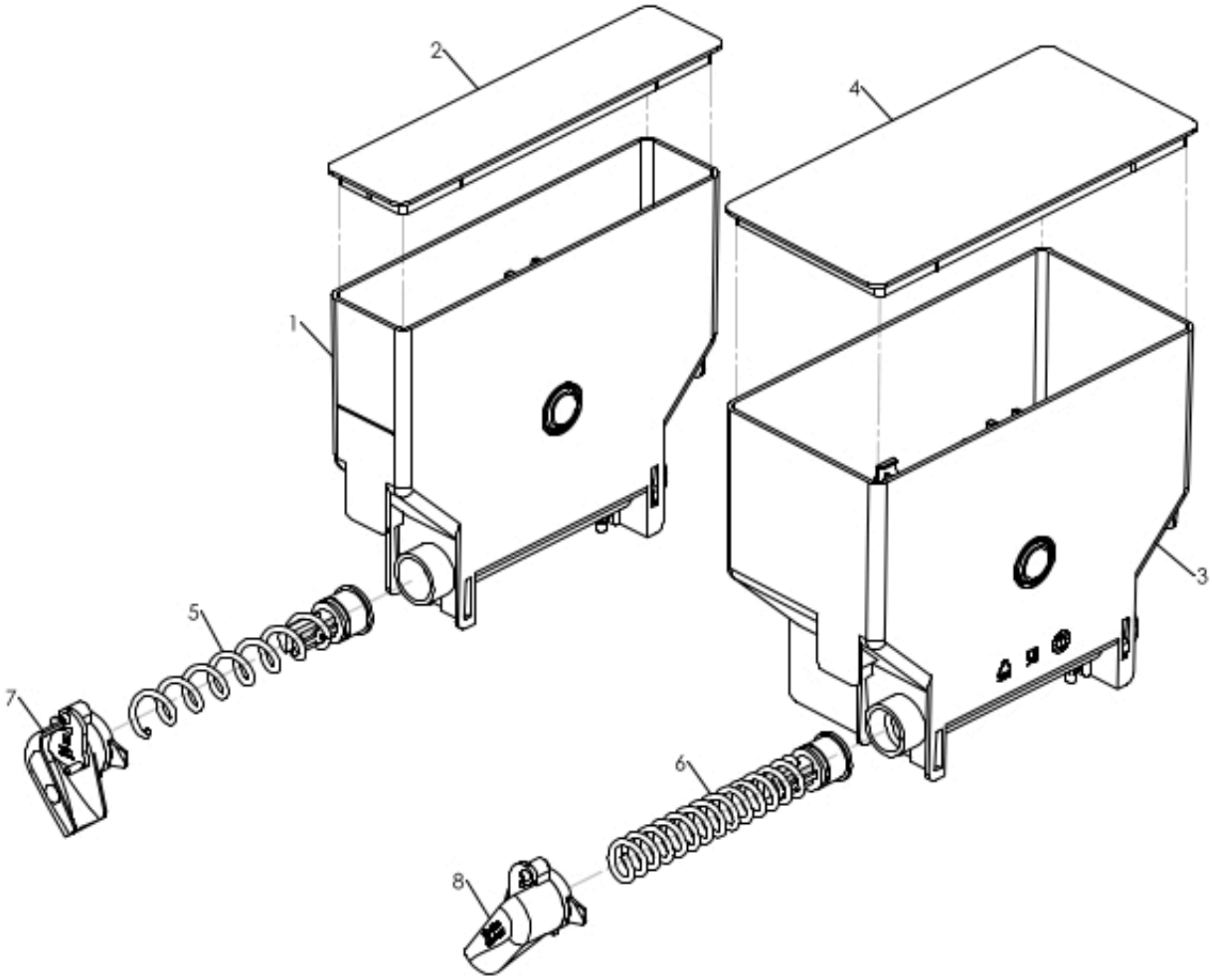

www.rheavendors.com tel: 0039 02 966 551 fax: 0039 02 96 55 086 email: rheavendors@rheavendors.com exclusive property of rheavendors group

products container		
Pos.	**Code**	**Description**
1/a	Z0230030506R	§ CANIS. 54-190 WHEEL18 W/LID
1/b	Z0230030502R	§ CANIS. 54-190 WHEEL9 W/LID
1/c	Z0230030503R	§ CANIS. 54-190 AGIT.9 W/LID
1/d	Z0230030507R	§ CANIS. 54-190 AGIT.18 W/LID
2	Z0230030156	CANISTER 54 LID
3/a	Z0230030525R	§ CAN. 110-190 AGIT.18 W/LID-L
3/b	Z0230030522R	§ CAN. 110-190 AGIT.18 W/LID-R
3/c	Z0230030524R	§ CAN. 110-190 AGIT.9 W/LID-L
3/d	Z0230030521R	§ CAN. 110-190 AGIT.9 W/LID-R
4	Z0230030158	CANISTER 110 LID
5	Z0230030014CL	§ SPIRAL 18
6	Z0230030013CL	§ SPIRAL 9
7/a	Z0230030058R	§ INGRED. CHUTE-RIGHT ORANGE
7/b	Z0230030044R	§ INGREDIENT CHUTE-RIGHT RED
8/a	Z0230030057R	§ INGREDIENT CHUTE-LEFT ORANGE
8/b	Z0230030043R	§ INGREDIENT CHUTE-LEFT RED

www.rheavendors.com tel: 0039 02 966 551 fax: 0039 02 96 55 086 email: rheavendors@rheavendors.com exclusive property of rheavendors group

coffee beans container

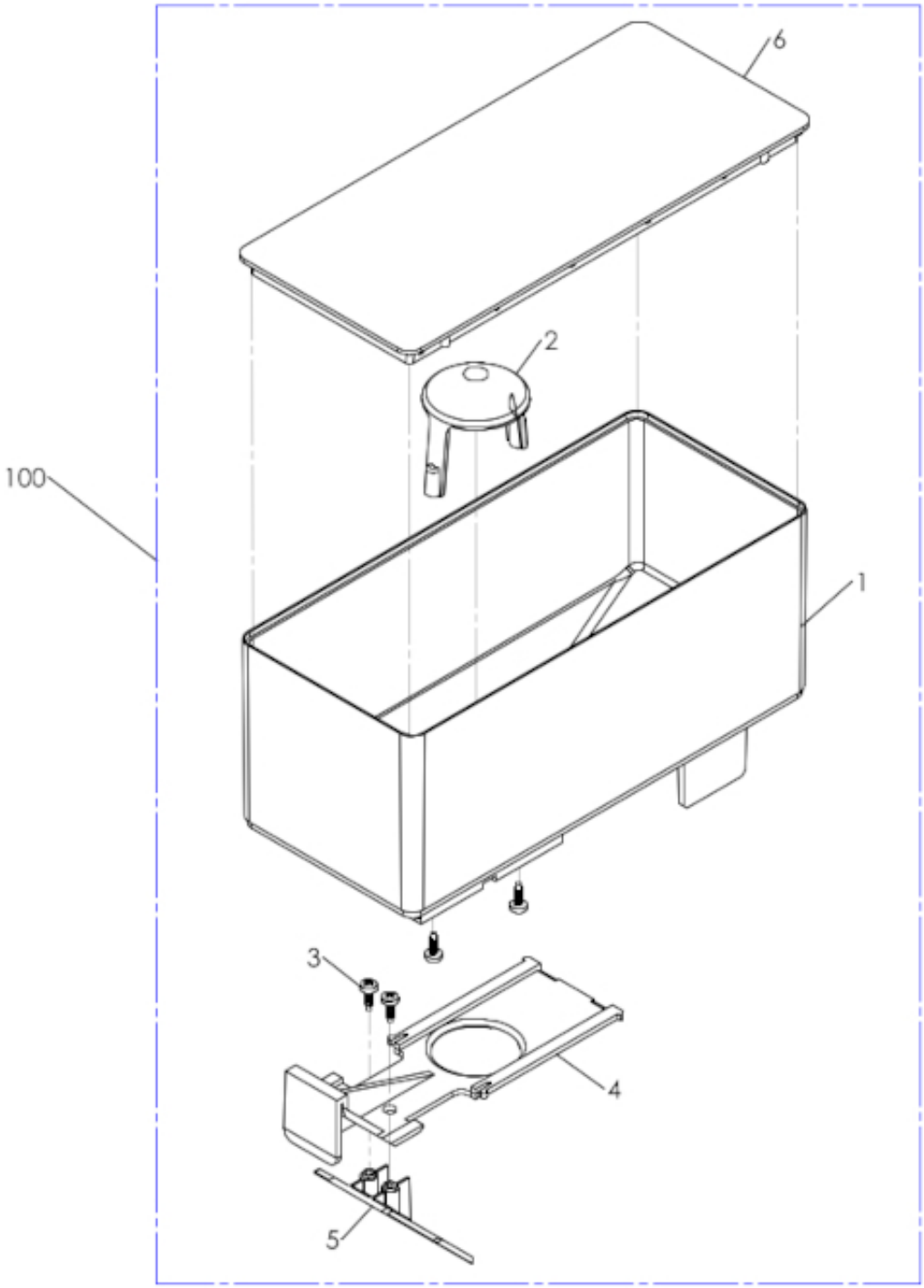

www.rheavendors.com tel: 0039 02 966 551 fax: 0039 02 96 55 086 email: rheavendors@rheavendors.com exclusive property of rheavendors group

coffee beans container		
Pos.	**Code**	**Description**
1	Z0230015302TR	COFFEE BEANS HOPPER
2	Z0230015227TR	GRINDER COVER
3	VIT0002469	SCREW HEAD TAP M3.5X10
4	Z0230015303-01IC	COFFEE BEANS HOP. STOP.RAL2011
5	Z0230015306NA	REGUL. GRINDER STOPPER PLATE
6	Z0230015305CK	COFFEE BEANS HOP. LIDRAL7037
100	Z0230015300R1	COFFEE BEANS HOPPER

www.rheavendors.com tel: 0039 02 966 551 fax: 0039 02 96 55 086 email: rheavendors@rheavendors.com exclusive property of rheavendors group

COFFEE GROUNDS CONTAINER

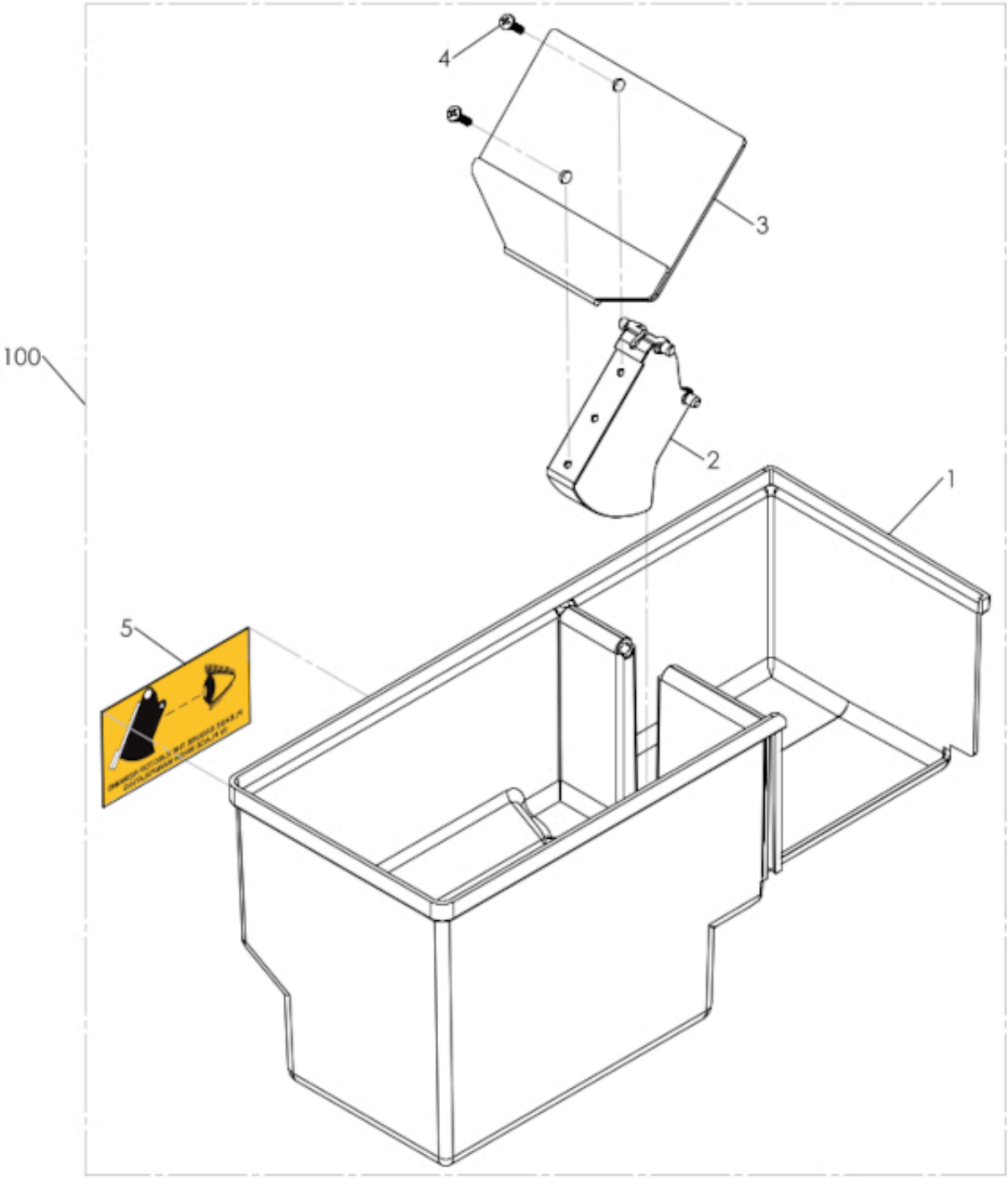

www.rheavendors.com tel: 0039 02 966 551 fax: 0039 02 96 55 086 email: rheavendors@rheavendors.com exclusive property of rheavendors group

COFFEE GROUNDS CONTAINER		
Pos.	**Code**	**Description**
1	Z001B185061NA	GROUNDS BIN
2	Z0010024164-02	GROUNDS EJECTOR
3	Z001B185059	GROUND EJECTION PLATE
4	VIT0002027	SCREW ST HEAD CAP M3.5X13
5	1010100214	STICKER GROUND EJECTOR
100	Z001B185061CL	§ GROUNDS CONTAINER

www.rheavendors.com tel: 0039 02 966 551 fax: 0039 02 96 55 086 email: rheavendors@rheavendors.com exclusive property of rheavendors group

COFFEE GROUNDS CHUTE KIT

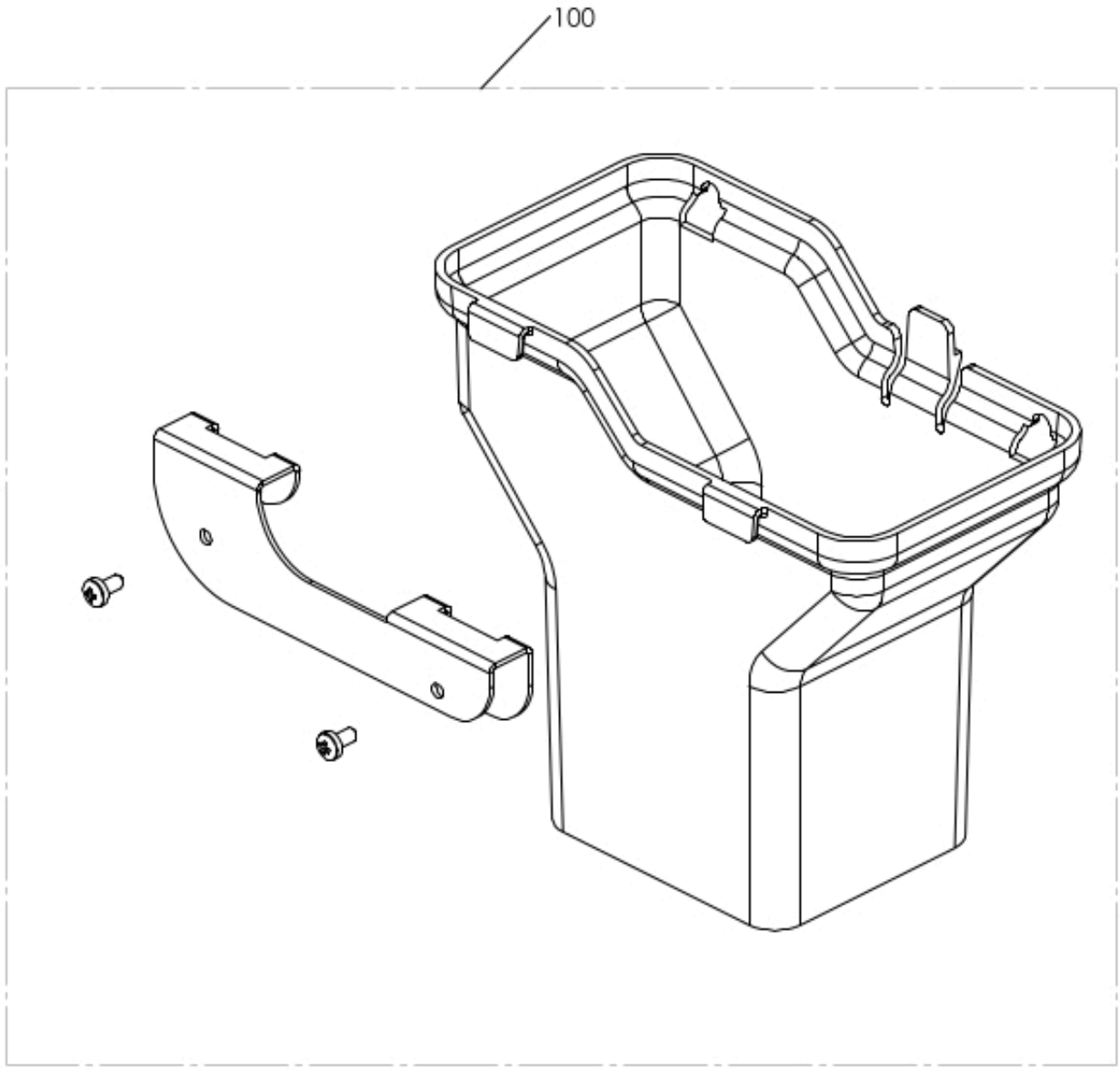

www.rheavendors.com tel: 0039 02 966 551 fax: 0039 02 96 55 086 email: rheavendors@rheavendors.com exclusive property of rheavendors group

COFFEE GROUNDS CHUTE KIT		
Pos.	**Code**	**Description**
100	KITB185001	KIT GROUNDS CHUTE rhTT1

www.rheavendors.com tel: 0039 02 966 551 fax: 0039 02 96 55 086 email: rheavendors@rheavendors.com exclusive property of rheavendors group

DRIP TRAY

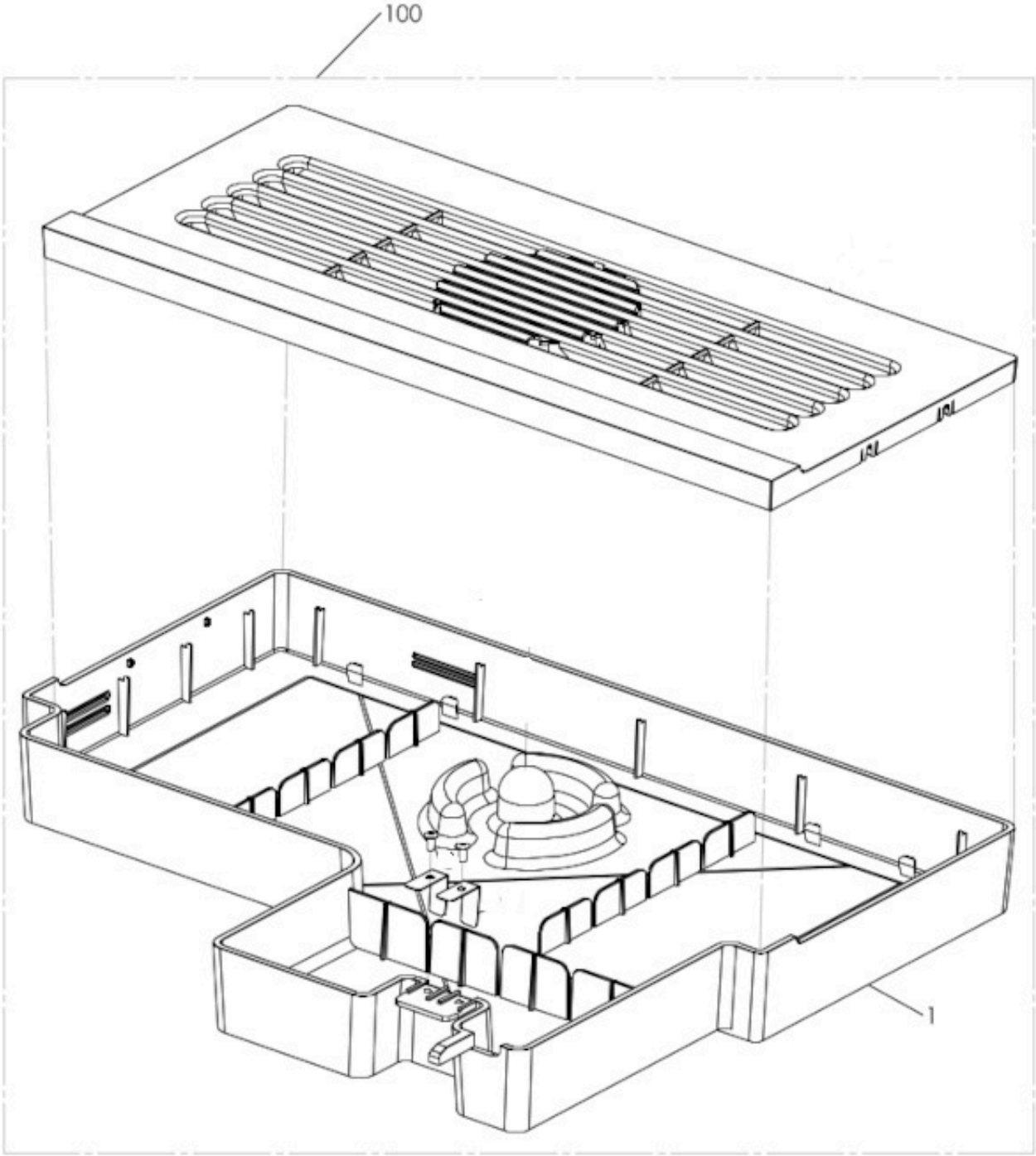

www.rheavendors.com tel: 0039 02 966 551 fax: 0039 02 96 55 086 email: rheavendors@rheavendors.com exclusive property of rheavendors group

DRIP TRAY		
Pos.	**Code**	**Description**
1	Z001B185062NAR	§ DRIP TRAY H2O
100	Z001B185062CL1	§ DRIP TRAY W/O SS RING

www.rheavendors.com tel: 0039 02 966 551 fax: 0039 02 96 55 086 email: rheavendors@rheavendors.com exclusive property of rheavendors group

RFID KIT

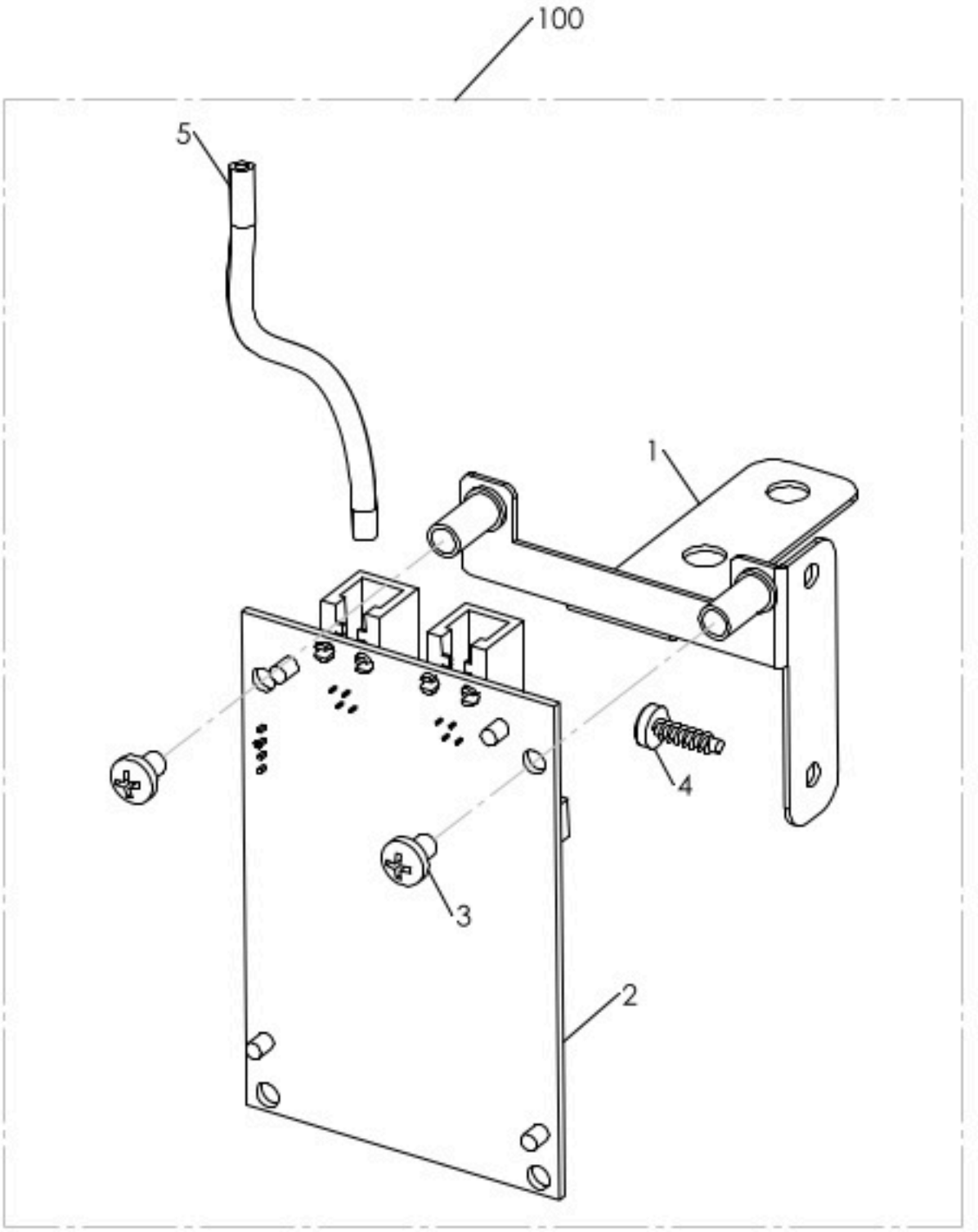

www.rheavendors.com tel: 0039 02 966 551 fax: 0039 02 96 55 086 email: rheavendors@rheavendors.com exclusive property of rheavendors group

RFID KIT		
Pos.	**Code**	**Description**
1	Z002B185061	RFID BRACKET
2	SCH0006261	RFID CARD READER_1
3	VIT0000021	SCREW HEAD TAP CAP M4X6
4	VIT0002479	SCREW HEAD TAP 3,5X12
5	ELT0030725	CON.CPU-RFID TELEF.4VIE CM140
100	Z002B185060R	§ RFID rhTT1

www.rheavendors.com tel: 0039 02 966 551 fax: 0039 02 96 55 086 email: rheavendors@rheavendors.com exclusive property of rheavendors group

WIRINGS

www.rheavendors.com tel: 0039 02 966 551 fax: 0039 02 96 55 086 email: rheavendors@rheavendors.com exclusive property of rheavendors group

WIRINGS		
Pos.	**Code**	**Description**
1	CBLB185047	DOOR INTERFACE WIRING
2	CBLB185063	ACTUATOR WIRING 230V E V+
3	CBLB185061	ACTUATOR WIRING 24V E V+
4	CBLB185049	INTERFACE BRD 5V/24V WIRING
5	ELT0030483	FLAT CABLE 16P F+F CM43
6	CBLB185001	DOOR SWITCH WIRING
7	CBLB185062	EXTEN MIXER WIRING + EV
8	CBLB185058	EXTENT VARIFLEX WIRING
9	CBLB185046	DRIP-TRAY HEATING ELEM WIRING
10	CBLB185064	EXT.ACTUATOR WIRING 230V E V+
11	CBLB185065	ACT.EXT.WIRINGS 24V E V+
12	CBLB185066	VRTHE BRD WIRING 230V
13	CBLB185068	DOOR SWITCH WIRING V+
14	CBLB185010	GROUND-SOCKET WIRING
15	CBLXSC0051	FUSE FILTER WIRING
16	CBLXSC0054	INDUCTION FAN WIRING
17	CBLXS00009	THERMOSTAT EXTENSION WIRING
18	CBLXSC0052	POWER BRD WIRING 5/24V
19	ELT0030477	FLAT CABLE 10P F+F CM57
20	CBLB166026	LVDS WIRING
21	CBLB185005	DISPLAY WIRING 24V
22	ELE0055012	SUPPLY CABLE+PLUG+SCHUK.SOCKET
23	CBLB185048	CUP SENSOR WIRING
24	CBLXS00319	GROUND WIRING

www.rheavendors.com tel: 0039 02 966 551 fax: 0039 02 96 55 086 email: rheavendors@rheavendors.com exclusive property of rheavendors group

RETROFIT TOUCH 10" KIT

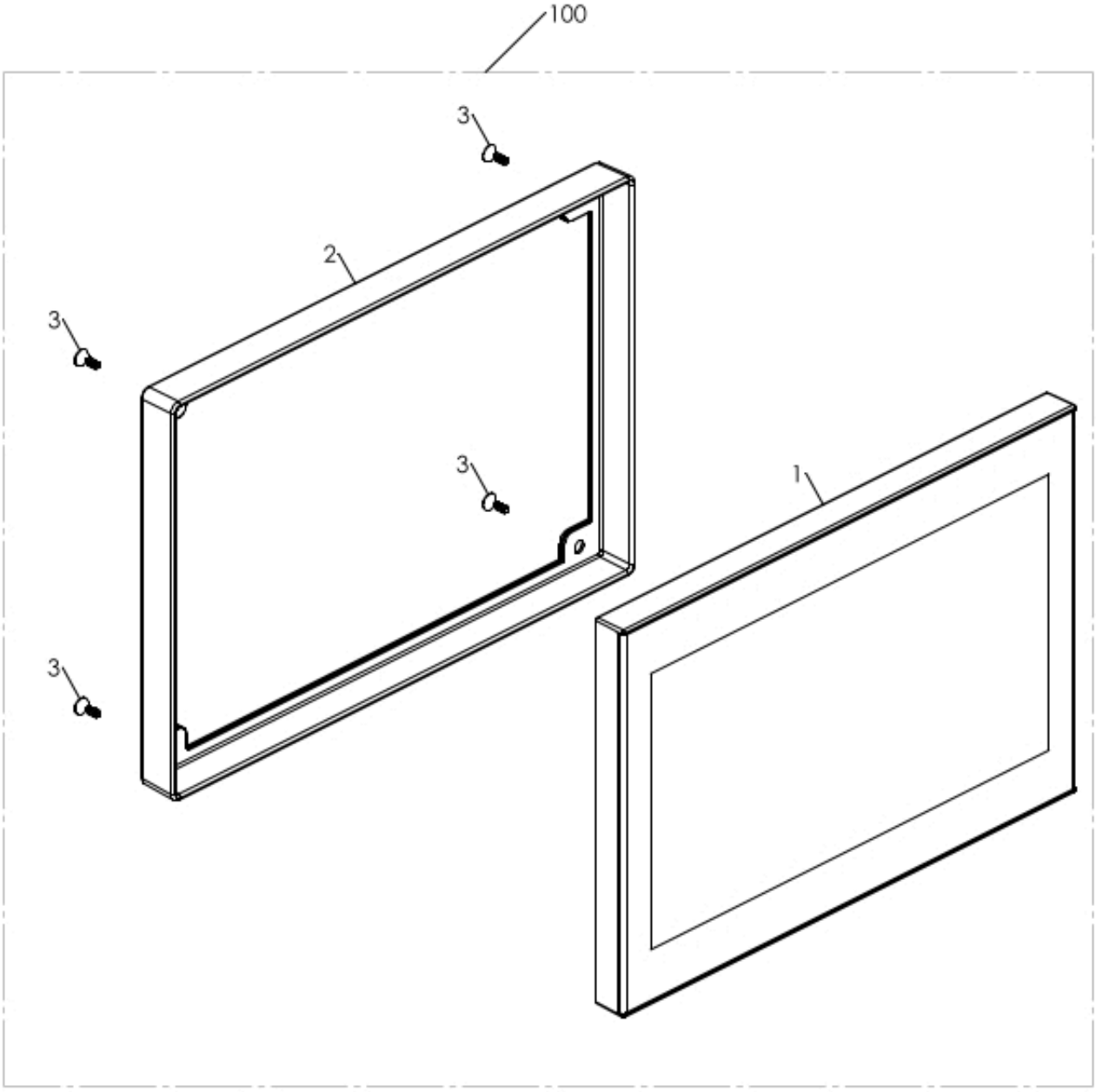

www.rheavendors.com tel: 0039 02 966 551 fax: 0039 02 96 55 086 email: rheavendors@rheavendors.com exclusive property of rheavendors group

RETROFIT TOUCH 10" KIT		
Pos.	**Code**	**Description**
1	Z002B185071CL	§TOUCH 10.1"
2	Z002B185072XC	CHROME COVER DISPLAY 10"
3	VIT0002129	SCREW TSP 3,50X10
100	KITB185002	KIT RETROFIT TOUCH 10" rhTT1

www.rheavendors.com tel: 0039 02 966 551 fax: 0039 02 96 55 086 email: rheavendors@rheavendors.com exclusive property of rheavendors group