rhea

rh**TT1**

Installation and Maintenance Manual rhTT1 – rhTT1.vho

Translation of the original instructions – Type: TT01

rh**TT1**

rh**TT1.vho**

Manual Code: MAN1300005 rev.03

date: February 2025

03	25.02.2025	New electronic boards, new boilers, EK7 grinder (optional)
02	25.06.2024	version rhTT1.vho added
01	08.11.2023	General updates
00	28.09.2022	First issue LIght
rel.	**date**	**description**
this document is made available electronically on the www.rheavendors.com site		

Please print this manual only if necessary, environmental protection is our common interest.

Summary

1. General information 5
   1.1. Intended use 5
   1.2. Copyright information 5
   1.3. Storage of the manual 5
   1.4. Serial number label 6
   1.5. Conformity mark 6
2. General safety instructions 7
   2.1. Symbols of danger 7
   2.2. Safety standards for maintenance 8
   2.3. Residual risks 9
3. Techincal data of the vending machine 10
4. Installation 11
   4.1. Receipt 11
   4.2. Handling 11
   4.3. Unpacking 11
   4.4. Positioning 12
   4.5. Electric connection 12
   4.6. Hydraulic connection 13
   4.7. Water quality 13
5. Description of the vending machine 14
6. First installation of the machine 16
   6.1. Cleaning and sanitising the vending machine and its parts in contact with foodstuffs 16
   6.2. Cleaning and sanitising internal components .... **Errore. Il segnalibro non è definito.**
   6.3. Start up 17
7. Machine setup mode 18
   7.1. Setup mode 18
8. Cleaning/rinsing 19
   8.1. First rinsing procedure 19
   8.2. Clean the coffee brewer (Indux and Boiler) 21
9. First installation (water circuit filling) 22
   9.1. Rinse the hydraulic circuit (Indux and Boiler) 23
10. Vending machine loading 24
   10.1. Loading instant products and coffee beans (when the machine is off). 24
11. Programming 24
12. Maintenance 25
   12.1. Weekly 25
   12.2. Monthly 26
   12.3. Yearly 27
13. Uninstallation (water circuit emptying in Espresso) 28
14. Suspension of the service (temporary inactivity) 29
15. Out of service 29
   15.1. Temporary out of service 29
   15.2. Definitive out of service 30

1. General information

1.1. Intended use

This machine is intended for professional use only, the correct operation of the vending machine occurs indoors under normal environmental conditions and at a room temperature between 5 °C and 35 °C, the relative humidity below 80%.

The vending machine is intended to dispense prepared drinks only, by mixing food products with water (espresso coffee by infusion) to use food products declared by the manufacturer suitable for vending in open canisters, any other use is improper and it may cause accidents. Dispensed drinks shall be consumed immediately and in no case preserved for later consumption; however, it is recommended to use products specific for vending machines only.

Never use the machine for purposes other than its intended use; it is absolutely forbidden to make any technical change.

All the instructions on how to maintain, clean and sanitise the vending machine shall be strictly observed and followed by the operator who shall pay great attention to treatment, preservation and replacement of the products as scheduled and make sure that they perfectly comply with the standards for preserving and dispensing foodstuffs.

Due to the large variety of available options and the constant technical update of our vending machines, some special device or function might be indicated and described not in the manner you expect.

1.2. Copyright information

This document contains some confidential information of Rheavendors Industries S.p.A.'s exclusive property. The content of this document can be neither disclosed in favour of third parties, nor copied or reproduced in any form whatsoever, either fully or partially, without Rheavendors Industries S.p.A.'s prior authorisation in writing.

The utilisation, reproduction or disclosure of the technical information in this document can be protected by Rheavendors Industries S.p.A. according to the Law.

Rheavendors Industries S.p.A. reserves the right to improve future production without serving any prior notice and without assuming any obligation to update the products on the market.

The manufacturer will disclaim all responsibility for any inaccuracy due to misprints.

1.3. Storage of the manual

This user manual forms an integral part of the machine and it shall be kept intact and at the user's disposal for the whole life cycle of the machine.

This manual is intended for the installer and the maintenance technician, it shall be kept carefully and accompany the vending machine at each property transfer during its life.

For a better storage handle it carefully, with clean hands and never place it on dirty surfaces. No part shall be removed, torn or arbitrarily modified, the manual is to be filed in an environment protected against humidity and heat and in the proximity of the machine of reference.

A copy of this manual and the complete manual may be requested from the contact details of the following point.

1.4. Serial number label

Silver serial number labels are applied inside and outside the cabinet of the vending machine, they supply the following information:

1	Type of the machine
2	Model of the vending machine and configuration
3	Rating plate with power supply voltage and hydraulic supply
4	Manufacturer
5	Vending machine code - production date and serial number
6	Country of manufacture
7	Certifications

For a quick identification of the vending machine and for the best support please supply the data on the serial number label and make them known.

Rheavendors Industries S.p.A. is ready to supply support and information on this vending machine;

telephone: +39 02 966551

e mail: rheavendors@rheavendors.com

for the references of our partners all over the world visit the site: www.rheavendors.com

1.5. Conformity mark

DECLARATION OF CONFORMITY

Rheavendors Industries S.p.A. declares that this drink vending machine has been designed and manufactured in compliance with the following directives and regulations:

DIRECTIVES : 2014/30/EU, 2006/42/EC, 2012/19/EU, 2011/65/EC, (EU)2015/863, 2014/53/EU*

REGULATIONS : 1907/2006/EC, 1935/2004/EC

MANUFACTURER : Rheavendors Industries S.p.A. - Via Valleggio, 14 - 22100 Como (CO) – Italy

(*) The machine could be equipped with radio modules approved by Rheavendors Industries SpA; on the label, some letters identify the type of radio technologies (as shown below)

w	r	m	L
Wi-Fi	RFID	GSM module	LTE module

The radio parameters are:

Wi-Fi : 2402-2480 MHz, max power 20 dBm

RFID : 13.56MHz, radiated H-field (maximum field strength) H-field @ 10m =-31.5 dBµA/m

GSM module : 33 dBm 900 MHz; 30 dBm 1800 MHz.

LTE module : LTE-FDD: B1/ B3/B7/B20: Class 3 (23 dBm ±2 dB)
WCDMA: B1/B8: Class 3 (24 dBm +1/-3 dB)
GSM: B8 (900 MHz) Class 4 (33 dBm ±2 dB) and B3 (1800MHz) Class 1 (30 dBm ±2 dB)

2. General safety instructions

2.1. Symbols of danger

Before using the machine, carefully read this information that helps you behave properly and guarantees a safe use; the following pages use the symbols listed here below, whose meaning is of attention:

GENERAL
If the text is highlighted by this symbol, it is recommended to pay special attention to the performance of the procedures described; if not carefully performed on safe conditions, they can be source of general danger.

HIGH VOLTAGE
If not properly performed, the actions marked by this symbol may expose to accidental contacts with live parts.

DANGEROUS TEMPERATURE
If not properly performed, the actions marked by this symbol may expose to accidental contacts with high-temperature parts.

MOVING PARTS
If not properly performed, the actions marked by this symbol may expose to accidental contacts with moving parts.

CRUSHING
If not properly carried out, the actions marked by this symbol may expose to a risk of crushing.

The same symbols are placed inside the vending machine to indicate the parts on which to act with the utmost caution.

NON-IONIZING RADIATION (versions with induction heating)
People with a cardiac pacemaker or similar medical devices shall not be in the proximity of the machine when it is dispensing a drink and it is free of any external metal protection; if case of doubt, to avoid any danger, consult a physician before using this vending machine.

SERVICE KEY IN USE
The symbol recommends the utmost attention during the actions described; the use of the service key activating all machine functions when the door is open is only reserved to the technical operators who know the operation of the vending machine, who are aware of its potential risks and who make sure they are operating on totally safe conditions; the use of the service key shall be strictly limited to the time necessary to perform the actions requiring the use thereof; users shall be informed of the prohibition on using and approaching the vending machine.

WEIGHT
The symbol reminds the user to consider the machine weight carefully for handling and placing it definitively.

WATER SUPPLY
It marks the parts duly requiring caution in case of leakage, if connected with the hydraulic network.

SUPPORT SURFACE
It reminds the user to install the machine on a support surface, the max. inclination of which is 2°.

2.2. Safety standards for maintenance

The machine shall be installed according to the laws in force in the Country of operation; pay special attention to the rules about the machines directly connected with the hydraulic network.

Pay special attention to the chapters and notes highlighted by the symbols of alert and strictly observe the rules concerning the technicians', operators', and users' safety.

The vending machine may be used by children who are at least 8 years old and by people having reduced physical, sensory or mental capacities or not having all necessary experience and knowledge, provided that they are supervised or instructed on how to use the machine safely and they have well understood the dangers related thereto; children must be supervised and prevented from playing with the vending machine.

Should you find out a water leak, the presence of smoke, ... immediately detach the vending machine from the electric and hydraulic network, never try to restore its operation and apply to skilled technicians.

The inclination of the support surface of the vending machine shall not exceed 2°.

The normal operation conditions of the vending machine shall be:
Temperature: 5 °C ÷ 35 °C and maximum relative humidity: 80 %.

If the hydraulic connection tube is not supplied with the machine or in case of replacement, the connection must be carried out only with a set of mobile joints (old ones shall never be reused), whose material is type-approved for food use according to the laws in force in the Country of operation and capable of supporting the operating pressure of the hydraulic network, in compliance with IEC/EN 61770.

The user is forbidden to approach the vending machine during maintenance and service operations.

The area where to carry out maintenance and service operations shall be properly signalled.

Never remove protections, never override safety devices and never modify the machine or its components.

The vending machine is not suitable for installation in environments where you use water jets for cleaning (e.g. large kitchens, canteens) or steam jets or sparks (e.g. machine shops).

For cleaning at regular intervals refer to the chapter about maintenance.

2.3. Residual risks

A residual risk is understood as a potential danger that cannot be eliminated and persists despite all precautions in use since it is related to the intrinsic features of the product, and it also includes non-identifiable risks.
The actions and behaviours listed here below are intended to reduce residual risks and you shall always adopt them when interacting with the machine.

Wear clothes that can properly avoid any accident (never wear rings, chains, clothes with laces or excessively long sleeves, …).

Carefully evaluate the treatment of residues from installation (wood, plastics, …) and utilisation (product powder, bags, …).

Never repair or carry out any technical action if you have not been properly trained.

Signal that a technical action is in progress on the machine (barriers against approach, signs, …), carry it out quickly without leaving the station.

Install the machine in a sheltered, illuminated and well-ventilated environment; keep it clean and never place tools or any other object on it; never install it outdoors or, anyway, never expose it to atmospheric agents.

Make sure it can be neither reached by water sprays, vapours or sparks nor hit by objects that might damage it.

Carefully consider the machine weight and stability during the installation and in the final working position.

Supply the machine within voltage, temperature, pressure and water limits and provide for an effective earthing.

Even if detached from supplies, the machine may contain pressurised hot water at a high temperature.

Never detach hydraulic and electric supplies when they are active and/or the vending machine is in use.

3. Techincal data of the vending machine

DIMENSIONS	rhTT1	rhTT1.vho
Height:	610 mm.	745 mm.
Width:	375 mm.	375 mm.
Depth:	575 mm.	575 mm.
Depth with open door:	775 mm.	775 mm.

NET WEIGHT	rhTT1	rhTT1.vho
Instant machine:	30,5 Kg.	-
Espresso machine with Induction:	36,5 Kg.	38,5 Kg.
Espresso machine with Boiler:	36,5 Kg.	38,5 Kg.

SUPPLIES	
Hydraulic:	water inlet with 3/4” Male Gas-fittings
Hydraulic pressure range:	0,1 - 1,0 MPa
Electrical voltage	220-240 Vac, 50-60 Hz o 120 Vac, 60 Hz single-phase and ground
Power	from 1.400 W to 3.000 W
Cable of type	H05VV-F 3G 1,5 mm² (230 V); SJTO 3x16AWG (120 V)

*values and indications for the standard machine

anyway refer to the data supplied by the serial number label

SOUND PRESSURE	
A-weighted sound pressure level:	Less than 70 dB (A) measured at 1 meter from the surface of the machinesy and at a height of 1,6 meters from the floor

WATER AND ENERGY SUPPLY TOLERANCES / ENVIROMENT TOLLERANCES	
total water hardness:	from 10 °f to 25 °f
water conductivity:	400 µS @ 20 °C
nominal electric voltage:	+10 % / -15 %
temperature:	from 5 °C to 32 °C
relative humidity:	maximum 80 %

4. Installation

4.1. Receipt

Upon receipt of the vending machine make sure that it has not been damaged during transport.

If you should find out any damage, immediately make a complaint to the carrier: the package shall be intact, it shall show no sign of alteration, dent, impact, deformation, breakage, wetted area or sign that may indicate that the package has been exposed to rain, frost or heat.

Never connect the vending machine hydraulically and/or electrically if the package has been damaged during transport and /or in case of missing visible parts.

4.2. Handling

The vending machine shall be transported, handled and positioned by skilled and trained personnel; **never overturn the machine while transporting it and never forget to observe the orientation arrows on the package**; never lift the vending machine with ropes, never drag it, never lay down the vending machine for transport and avoid any shock.

Two operators provided with personal protective equipment (safety shoes, gloves ...) are required for handling; the vending machines weigh abt. 40kg.

Handle the machine carefully to prevent any accident to the personnel in charge.

For handling use a lift truck or a manual transpallet for supporting its weight and handling it at a lower speed to avoid dangerous overturning or swaying motions.

The manufacturing company is not liable for any damage caused by the total or partial non-observance of the a.m. warnings.

4.3. Unpacking

Put the packed vending machine close to its working position, remove the vending machine from its package, lift the vending machine and arrange it on the working surface.

Use the key placed in the dispensing compartment to open the door of the vending machine and remove the adhesive tape and the polystyrene from the internal components (product canisters…).

The materials forming the package shall be left out of the reach of unauthorised personnel, in particular of children, since they represent a potential source of danger.

The disposal of package components may be carried out by specialised companies only.

4.4. Positioning

When installed in its workplace, the vending machine shall be positioned in a room protected against atmospheric agents: it is not suitable for installation outdoors.

It shall be installed in dry rooms at a temperature between 5 °C and 35 °C and it can't be installed in environments where you use water jets for cleaning (e.g. large kitchens, canteens) or steam jets or sparks (e.g. machine shops).

The switch, the socket and the relative plug shall be easily accessible, make sure that the wall socket is suitable for the type and length of the vending machine cable.

Use the cable supplied with the vending machine for connection with the electric network, the machine shall be placed close to a wall so that the rear panel and the external perimeter are min. 130 mm far from the walls for regular ventilation.

The vending machine shall in no case be covered with cloths or structures.

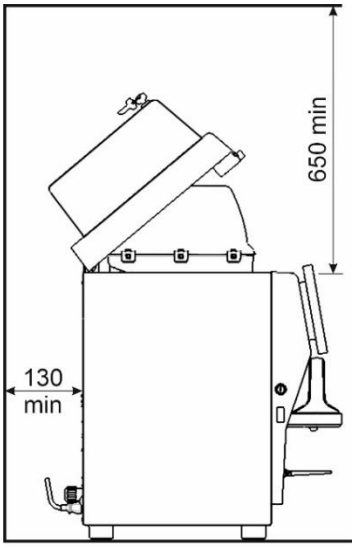

Make sure that the floor can support the weight of the machine, that the machine is placed on a levelled surface by adjusting its feet so that the inclination of the cabinet will not exceed 2° and that the vending machine is perfectly stable.

4.5. Electric connection

The machine is arranged for electric operation at a single-phase voltage of 220-240 Vac or 120 Vac and it is protected fuses.

Make sure beforehand that the power supply installation can supply the power required by the machine and strictly refer to the rating plate of the vending machine on the serial number label.

Observe the laws on connections with the electric network in force in the Country of operation, make sure that the power supply cable is neither crashed, nor bent, damaged by any sharp edge or subject to any mechanical load.

The electric safety of the vending machine is ensured only when it is properly connected with an effective earthing system; professionally qualified personnel shall check this fundamental safety requirement, the intactness of the machine and its compliance with the standards at least once a year.

It is mandatory to install a residual current device operating at less than 30 mA to detaching the machine from the mains and promptly tripping in case of improper electric input to considerably decrease the risks from any short-circuit. Connect the machine without using reductions, adapters, multiple sockets or extensions; use the cable supplied with the vending machine for connection with the network only.

If damaged, the power supply cable shall be replaced by the manufacturer or its customer care service or, anyway, by a person similarly qualified so as to prevent any risk by using only cables of the type: H05VV-F 3G 1.5 mm² in cross-section (230 V) or SJTO 3x16AWG (120 V).

4.6. Hydraulic connection

Observe the laws on connections with the hydraulic network in force in the Country of operation.

The water used to supply the vending machine must have all the features suitable for human consumption, let water come out of the hydraulic network until it is clear and free of any trace of dirt.

Make sure that the pressure of the network is the one required for the machine and use a pump or a reducer in case of non-compliance; it is recommended to install a tap detaching the machine from the hydraulic network.

The connection shall be carried out by means of a new tube only, type-approved for food use.

The water inlet solenoid valve is provided with an antiflood device mechanically locking the water inlet because of a malfunction of the solenoid valve or the components intended to control the water level in hydraulic circuit.

To restore normal operation, act as follows:

- power off the machine;
- discharge water from the overflow tube;
- close the tap of the hydraulic network outside the machine;
- loosen the joint securing the supply tube of the solenoid valve to discharge the residual network pressure and tighten it again;
- open the tap and power on the machine.

4.7. Water quality

The vending machine shall be supplied with treated or non-treated water, for drinking purposes and suitable for the preparation of food and drinks or for any other home use, supplied through a distribution network and they shall include neither micro-organisms and parasites nor other substances, whose quantities or concentrations may represent a potential danger for human health.

In this regard, the water features shall observe the laws in force in the Country of operation of the vending machine.

Hardness tolerance: from 10°f to 25°f

Water recommended conductivity: 400 µS @ 20°C

5. Description of the vending machine

The vending machine is a machine designed for being used by all users since requiring no specific competence; to obtain the drink, insert the possible credit and press the key you wish for a short time.

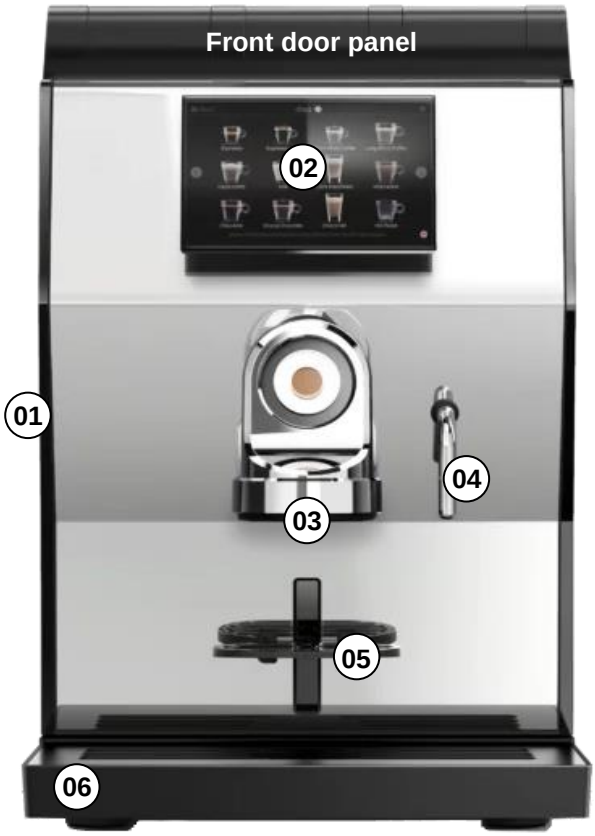

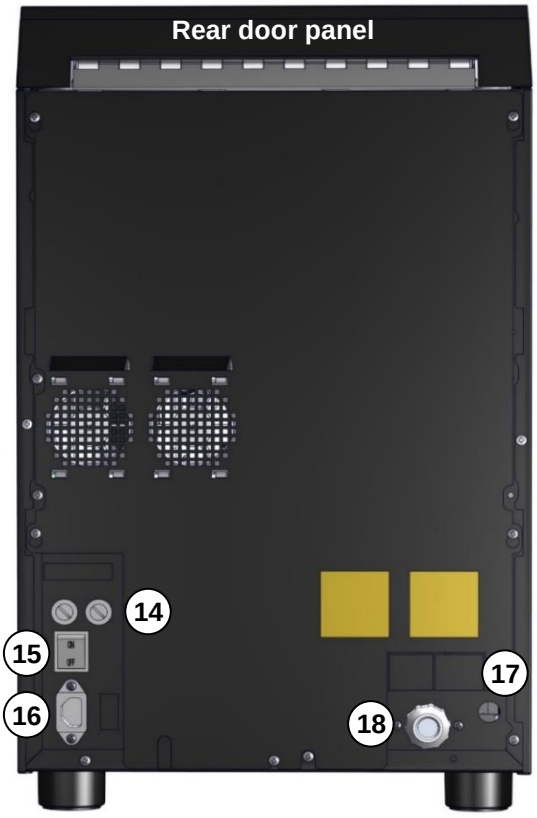

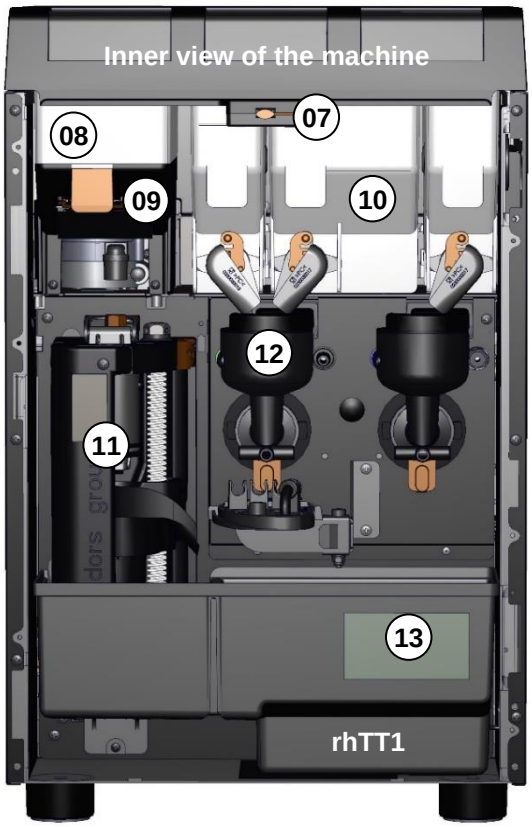

01 - Door lock: the door is closed by means of a lock; the key is mapped and numbered for identification.

02 - Touch screen: the central touch screen gathers all the functions necessary for communication with users; the selection keyboard of products, the programming keyboard and the multimedia messages for information for information are combined in this component.

03 - Nozzles holder: a fixed support on the cup station is intended to accommodate the dispensing tubes coming from the coffee brewer and the bowls of mixers.

04 - Side hot water nozzle (optional): the vending machine includes a nozzle dedicated to hot water, positioned on the right side of the dispensing compartment, separated from the standard one in the nozzles holder; it is controlled by a dedicated solenoid valve.

05 - Dispenser: the vending machine has got a fixed drink dispenser on the cup support surface.

06 - Drip tray: it collects any residual drop from the dispenser and, if necessary, the waste water in excess from the three-way solenoid valve; it is slide-inserted at the bottom of the machine cabinet, in the front, and it is composed by a drawer and a grilled cover that can be washed by running water; an electric contact is intended to control the filling level.

07 - Door switch: it powers off the machine when the door is open.

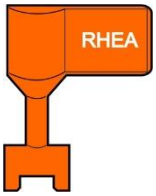

Service key:

use the service key to supply the vending machine if it is necessary to activate the machine when the door is open.

Attention some parts remain live any way: act with the utmost caution

the key is inside the documentation of the vending machine and its use is reserved to the properly trained technical personnel only.

08 - Coffee beans canister: the coffee beans canister (hopper) has got a closing blade for insertion before lifting it; the presence of the coffee beans canister is controlled by a micro switch; canisters are closed by a cover to protect products.The 3kg version has three different type of coffee beans canisters, in order to give more capacity to the vending machine: 1,2kg – 2,0kg – 3,0kgs.

09 - Grinder: it grinds coffee beans in the canister to pour it in the coffee brewer chamber; the grinding degree can be manually adjusted by means of the wheel, the ground quantity is determined by a software parameter that establishes the grinder work time. **Grinder EK7**: optional – grinder with higher performance in grinding speed. **Motorized grinder Varigrind**: the grinder is made available with the motorized regulation of the distance between the grinding wheels, depending upon the software settings.

10 - Product canisters: instant product canisters dispense their content into the underlying mixing bowls; an internal worm screw - driven by the product motor - will push the instant foodstuff to the product chute; they can be equipped with a wheel and a shaker for constant dispensing; the outlet, of a standard or smaller size, has got a closing baffle.

11 - Coffee brewer: after receiving the coffee dose from the grinder and compressing it, percolation occurs in the coffee brewer by using the water from the pump; the used dose is conveyed to the chute and the drawer at the base of the machine; the brewer structure is kept at the correct temperature by a hot air heating system that can be programmed via software.

12 - Mixing bowls: the mixing bowls of mixers are intended to receive instant products for mixing them with water; the fan of mixer motors acts at the bottom thereof and the drink flows into the dispenser through a silicone tube; the mixing bowls and outlet tubes can be washed with lukewarm running water.

13 - Grounds container: it collects abt. forty ground doses, after having used them in the coffee brewer; a software option shows a warning message as soon as the tray is full.

14 - Fuses: installed on the mains power supply to protect the machine; fuses must be necessarily replaced by specialised technical personnel only.

15 - Power on switch: to power on and off the machine.

16 - Electric connection: a three-terminal socket is arranged at the back of the cabinet for the connection of the mains cable.

17 - Water drain plug: from where to let the silicone tube from the air break come out for emptying.

18 - Solenoid valves: directly managed by the CPU board of the machine, the solenoid valves are intended to dispense hot water directly into the mixing bowls or to recirculate water inside a pre-heating internal circuit.

6. First installation of the machine

After unpacking the vending machine, placing it firmly at the workstation as well as providing for its water and energy connection, carry out some actions for its functionality.

Wash your hands carefully with water and soap before handling the machine and the products; use drinkable water only to clean the parts thereof.

Please remember that all the actions described below shall be carried out by personnel having a practical knowledge and experience of the machine, as regards safety and hygiene.

6.1. Cleaning and sanitising the vending machine and its parts in contact with foodstuffs

During the first installation of the vending machine and at least every week, according to the use and quality of inlet water, to ensure the hygiene of dispensed products, carefully sanitise powder deposit drawers, mixers and instant drink dispensing conduit as well as dispensing tubes and nozzles; sugar chute, dispensing compartment.

All components must be cleaned with lukewarm running water only (drinkable, maximum 50 °C). The mixers and the instant canisters can be washed in a dishwasher by setting a short clean cycle and a temperature below 50°C.

Use sanitising products also to clean the surfaces not directly in contact with the foodstuffs, pay attention not to clean the machine by means of water jets.

Some parts of the machine may be damaged by aggressive detergents.

The manufacturer disclaims all responsibility for any damage caused by the non-observance of the above or by the use of aggressive or toxic chemical agents.

6.2. Cleaning and sanitising internal components

Prepare a chlorine-based anti-bacterial sanitising solution by observing the instructions supplied with the product; after disassembling and removing, put the product canisters, the mixing bowls of mixers, their fans and the silicone tubes for dispensing products into the solution; the time necessary to sanitise is specified by the anti-bacterial product package; at the end, remove all the parts you have sanitised from the solution, dry them carefully by using clean cloths and reassemble them into the machine; rotate the baffles of the product chutes of instant canisters to close them and fill the canisters with the products by making reference to the machine configuration and to the canister labels; fill in the coffee hopper with coffee beans; close the canisters and the coffee hopper with their upper covers; rotate the baffles of the product chutes to open them.

To clean and treat foodstuffs properly, refer to the web site:

http://eur-lex.europa.eu/ searching for the regulation 2004/852/EC

dated 29/04/2004 (CELEX number: 32004R0852)

In the end, lower down the cover and close the door by means of the lock key and place it in a safe place.

6.3. Start up

As soon as the machine is powered on for the first time, all circuits must be filled in before any other action, and the vending machine performs a diagnostic cycle for loading water and properly placing the coffee brewer; some warning messages appear on the display for the progress of these phases.

For more details, please refer to the specific programming manual **“Software User Manual”.**

7. Machine setup mode

7.1. Setup mode

How to access it:

This menu gives access to all the machine programming functions; each function allows configuring specific machine parameters or performing specific procedures.

Open the door, lift the cover, power on the main switch of the machine; **insert and rotate the service key into the door switch.**

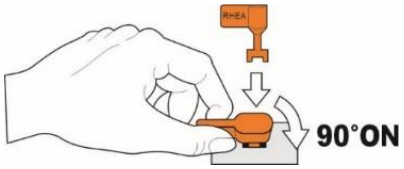

- open the machine door and press the **PROG** button.
- the machine exits the dispensing mode.
- the setup screen is displayed.

How to exit the setup mode:

Open the machine door and press the **PROG** button: the machine goes back to the dispensing mode.

8. Cleaning/rinsing

"Programming menu" > CLEANING/RINSING

8.1. First rinsing procedure

At the end of assembly and final inspection, the water used for testing is discharged from the machine; as soon as the machine is powered on for the first time, all circuits must be filled in before any other action; after all hydraulic circuits of the machine have been filled, the water flow stops automatically.

Transportation and installation conditions are such that the vending machine cannot be immediately used. It is necessary to carry out a complete clean cycle before using the vending machine, the machine will dispense a pre-fixed water quantity for each clean cycle.

Open the door, lift the cover, power on the main switch of the machine; **insert and rotate the service key into the door switch.**

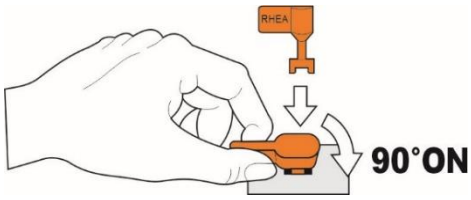

Attention

The vending machine is supplied and operating to all effects; the mobile parts of the coffee brewer will be handled; act with extreme caution.

Press the programming button to access the setup mode

This procedure allows you to rinse all the components of the machine's hydraulic system, such as the coffee group (Espresso) and the mixing cups (Mixer):

Prepare more cups as water is dispensed multiple times, place a cup beneath the nozzles; the machine will dispense a pre-fixed water quantity for each rinse cycle.

Introduction

This page allows performing the machine cleaning procedures. It also gives information on the latest and next cleaning cycle of the Indux milker.

Page overview (Indux and Boiler)

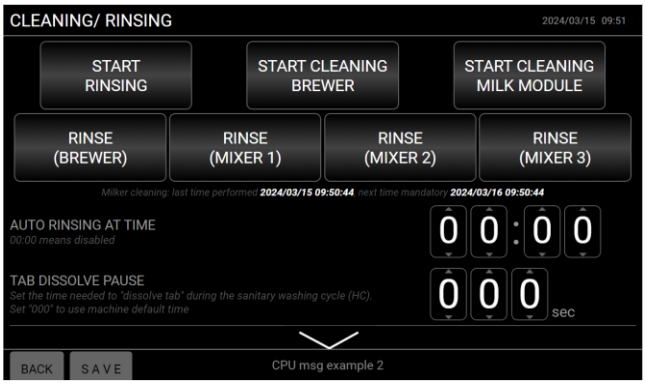

Element	Values	Description
START RINSING		"Rinse the hydraulic circuit"
START CLEANING BREWER		"Clean the coffee brewer"
START CLEANING MILK MODULE		"Clean the milker"
RINSE (BREWER) **RINSE (MIXER [n])**		See "Rinse the circuit components separately"
AUTO RINSING AT TIME	00:00-23:59	Set time for the automatic rinsing of the hydraulic circuit. See "Automatic rinsing"
TAB DISSOLVE PAUSE	0-999	Time it takes the tablet to dissolve.

Page overview (Instant)

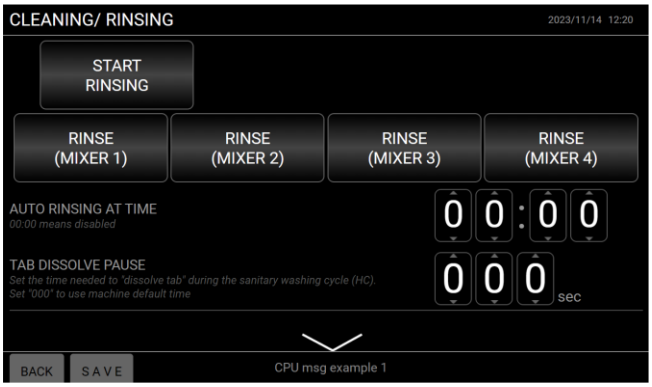

Element	Values	Description
START RINSING		"Rinse the hydraulic circuit"
RINSE (BREWER) (Espresso) **RINSE (MIXER [n])**		See "Rinse the circuit components separately"
AUTO RINSING AT TIME	00:00-23:59	Set time for the automatic rinsing of the hydraulic circuit. See "Automatic rinsing"

8.2. Clean the coffee brewer (Indux and Boiler)

"Programming menu" > CLEANING/RINSING

Procedure:

1. Prepare more cups as water is dispensed multiple times.
2. To start the procedure, tap **START CLEANING BREWER**, then **YES**.
3. Tap **MANUAL** or **AUTOMATIC**, depending on how the procedure has to be performed: some water is dispensed through the brewer nozzle. Then the brewer opens.

Note: If **AUTOMATIC** is selected, some steps are automatically confirmed.

4. Insert a cleaning tablet into the brewer, then tap **CONTINUE**: the brewer closes and the tablet starts to dissolve.

Note: It takes two 19-minute cycles for the tablet to be dissolved. The espresso pump opens about every twenty seconds.

5. When the tablet has dissolved, the first rinsing cycle of the brewer starts: the water flows through the brewer every ten seconds for three times.
6. Wait for the rinsing cycle to finish. Then tap **YES** to repeat the cycle or **NO** to continue: the brewer opens.
7. Clean the filter with a brush.
8. To start the second rinsing cycle of the brewer, tap **CONTINUE**: the water flows through the brewer every ten seconds for six times.
9. Wait for the rinsing cycle to finish. Then tap **YES** to repeat the cycle or **NO** to continue.
10. To make a coffee, tap **HAVE A COFFEE**: a coffee starts to be delivered. Alternatively, to end the procedure, tap **SKIP COFFEE**: some water is dispensed through each nozzle.
11. When finished, tap **CLOSE**: the **CLEANING/RINSING** page is displayed.

9. **First installation** (water circuit filling)

"Programming menu" > MAINTENANCE > INSTALLATION

Enable water circuit filling

In **FIRST INSTALLATION**, tap **YES**: the machine water circuit will automatically fill up the next time it is turned on.

Water filling cycle description

Phase	Description
1	The machine is switched on.
2	Cold water is dispensed from the brewer nozzle (Instant and Boiler) If present, the Varigrind is set to its standard position (280°) (Indux)
3	When the cycle is finished, the value in **FIRST INSTALLATION** is automatically set to **NO** to prevent the procedure from repeating at next power on.
4	The machine automatically restarts (Indux and Boiler)

9.1. Rinse the hydraulic circuit (Indux and Boiler)

"Programming menu" > CLEANING/RINSING

Rinse the whole circuit

This procedure allows rinsing all the components of the machine hydraulic system, such as the coffee brewer (Espresso) and all the mixing bowls.

1. Prepare more cups as water is dispensed multiple times.
2. Tap **START RINSING**, then tap **YES**: the rinsing cycle starts. When finished, the **CLEANING/RINSING** page is displayed.

Rinse the circuit components separately

This procedure allows choosing which component of the circuit to rinse.

1. Prepare more cups as water is dispensed multiple times.
2. Do what follows:

To rinse...	Then tap...
the coffee brewer (Espresso)	**RINSE (BREWER)**
the first mixing bowl	**RINSE (MIXER 1)**
the second mixing bowl	**RINSE (MIXER 2)**
the third mixing bowl	**RINSE (MIXER 3)**
the direct hot water circuit	**RINSE (MIXER 4)**

3. Tap **YES**: the rinsing cycle starts. When finished, the **CLEANING/RINSING** page is displayed.

Automatic rinsing

The automatic rinsing time can be set in the **AUTO RINSING AT TIME** field.

A 10-second countdown warns that the rinsing is about to start.

Hot water drains through all nozzles.

Note: The automatic rinsing graphics can be customized in the RheaMedia2 software.

10. Vending machine loading

10.1. Loading instant products and coffee beans (when the machine is off).

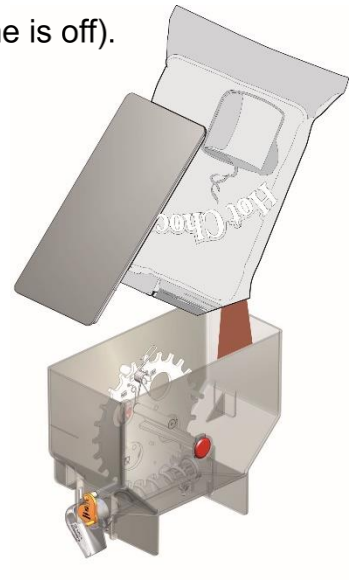

To load instant products, it is recommended to extract each canister.

To load coffee beans, close the baffle before extracting the canister.

Lift the covers of each canister and pour the product according to the content of the machine configuration, make sure that there is no lump and avoid compressing the product.

Never fill any quantity in excess to avoid ageing, check the capacity of each canister on the basis of technical data.

11. Programming

The vending machine is programmed with parameters considered standard for the specific configuration required.

The values forming the composition of recipes – written in the board memories – enable the user to dispense drinks without requiring the installer to programme special parameters; to modify these parameters for adaptation of the drinks you have produced, refer to the programming manual **"Software User Manual".**

The vending machine is equipped with an automatic cleaning/rising system for the coffee brewer and an automatic rinsing system for the mixers and the relative water circuit.

If the vending machine is not used for some time (weekends, etc.) even for less than two days, it is recommended to enable the automatic cleaning and rinsing functions available in the software manual before using the vending machine.

Rheavendors Industries S.p.A. is ready to supply support and information on this vending machine;

telephone: +39 02 966551

e mail: rheavendors@rheavendors.com

for the references of our partners all over the world visit the site www.rheavendors.com.

12. Maintenance

The time interval of cleaning operations largely depends upon the number of dispensing cycles and the hardness of water in use (use a softening system) and it must be adjusted to the working conditions of the vending machine.

The actions described herein are intended to prevent bacterial growth in the machine areas directly in contact with foodstuffs and to keep the parts conveying drink-composing products clean; after having disassembled the parts of the machine listed here below, use plenty of lukewarm water to remove any residue that should build up.

The support of a bacterialstatic or bactericidal solution may strengthen a deep cleaning and rinsing action, provided it is compatible with human health and the supply of foodstuffs; reassemble all the parts you have cleaned after having dried them by means of a piece of clean cloth.

Before accessing the machine for each maintenance operation, it is recommended to inform the users by means of warning signs - properly positioned - that it is forbidden to use and approach the vending machine.

Attention: never wash the machine by means of water jets, wash your hands carefully with water and soap before handling the machine and its products, use drinkable water only, all components must be washed with lukewarm running water only (maximum 50 °C).
The mixers and the instant canisters can be washed in a dishwasher by setting a short wash cycle and a temperature below 50 °C.

Empty the grounds container daily and wash it thoroughly with lukewarm water.

Also use the Service Book of the vending machine.

12.1. Weekly

Power off the machine, check the supply cable and carefully make sure that there is no signs of wear; check the stability and efficiency of internal connections of the mains supply carefully.

- **External structure and touchscreen**
  Use a non-abrasive cloth, dampened with lukewarm water; use a neutral, non-foamy detergent, only if necessary.

Attention:
use neutral detergents only; never use abrasive cloths, steel brushes, aggressive or foamy detergents and other solvents, boiling water and acid; above all, never use alcoholic solutions. Cleaning products shall be atomised on a cloth and not directly on the surface of the vending machine.

To clean the touch screen, it is recommended to use a mild detergent only, thinned according to the manufacturer's instructions, specific for these components (pc monitor and alike); pay attention not to scratch, not to leave any residual drop of the liquid detergent, not to spray the detergent directly onto the monitor; in any case, avoid dripping.

- **Drip tray**
  Extract the drip tray, remove the upper grilled cover and wash with plenty of water; open the door and clean the drip tray housing inside the machine.
- **Product chutes**
  Remove them from the product canisters, clean them with plenty of lukewarm water (product chutes are plugged in).
- **Product dispensing system**
  Turn the levers intended to fasten the mixing bowls clockwise, remove the dispensing nozzles, pull the mixing bowls and the upper ring; remove the chutes and clean the assembly of disassembled parts with plenty of lukewarm water.
- **Machine walls and bottom**
  Remove any trace of residue from the internal surfaces of the machine and clean with a damp cloth.
- **Internal door wall**
  Remove any trace of residue from the internal surfaces of the door, above all in the proximity of the cup station.

12.2. Monthly

- **Environmental aspirator and powder aspirator**
  Carefully make sure that the rotors of the two aspirators can freely rotate without any hindrance or stoppage; make sure that the corrugated tube for connection between the powder aspirator and the extraction drawer is clean and free of any product deposit.
- **Product canisters**
  Rotate the closing baffles, remove the canisters from the machine, clean them outside, clean the support surface carefully to remove any trace of product.
- **Coffee beans canister**
  Remove the coffee beans canister, make sure that coffee chute is free of any scale and that the millstones are intact and free of any residue.
- **Coffee brewer**
  The whole coffee brewer can be cleaned and washed with running water since it has no component that may be damaged.

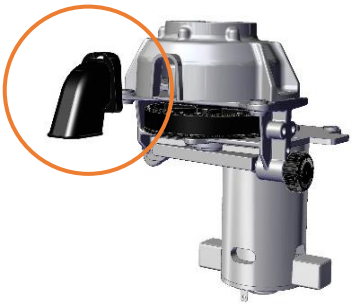

Remove the conveyor of the ground product simply by pulling it.

(shown model EK7 optional)

To extract the coffee brewer, release the carter by pressing on each side and pulling it to the outside.

Remove the coffee dispensing tube from the nozzles holder and then

remove the coffee brewer by pulling the orange release button and lifting it slightly.

12.3. Yearly

- **Dispensing system**
  Replace the gasket at the bottom of the mixing bowl of the mixer; extract the mixer motor fan by pulling it and replace the gasket of the mixer motor shaft.
- **Product canisters**
  Disassemble the product canisters on the machine; empty them, disassemble them in their basic components and clean them carefully.
- **Powder aspirator drawer**
  Extract the powder aspirator drawer and the tube and clean them with plenty of lukewarm water.
- **Silicone hoses**
  Make sure that the water conveying tubes are intact; replace them in case of need.
- **Air break**
  Empty and clean the air break tank; carefully check the micro switch functionality operated by the floater rod and make sure that it can freely slide without any hindrance.
- **Coffee brewer**
  Replace the three sealing rings of the compression chamber and the lower piston guide.

Replace the upper and lower filters.

Check the state of the compression chamber.

The frequency of these operations depends upon the number of dispensing cycles and the hardness of water in use.

Their regular and accurate execution prevents failures and malfunctions, it allows constant dispensing cycles and lengthens the life cycle of the machine.

The use of a softening filter, whose cartridge is regularly replaced, prevents the build-up of limestone.

The prescriptions reported in this manual must be integrated by the HACCP procedure of the company using the vending/coffee machine.

13. **Uninstallation** (water circuit emptying in Espresso)

"Programming menu" > MAINTENANCE > INSTALLATION

Procedure (Boiler):

1. In **UNINSTALLATION**, tap **START UNINSTALLATION**.
2. Check that the drip tray is empty, then tap **YES-CONTINUE**.
3. Remove the coffee grounds, then tap **CONTINUE**.
4. Disconnect the water supply, insert a tube into the drain tap of the boiler and remove the plug from the outlet hose of the air break. Then, put them close to a bucket (Boiler).
5. Tap **START UNINSTALLATION**: the water circuit starts to empty. When finished, the boiler water temperature is set to zero and the value in **FIRST INSTALLATION** is automatically set to **YES** to make the machine water circuit fill up the next time it is turned on.
6. Remove the tube, close the boiler tap and reinsert the drain plug of the air break.
7. Switch off the machine.

Procedure (Indux)**:**

1. In **UNINSTALLATION**, tap **START UNINSTALLATION**.
2. Check that the drip tray is empty, then tap **YES-CONTINUE**.
3. Remove the coffee grounds, then tap **CONTINUE**.
4. Tap **START UNINSTALLATION**: water is dispensed from all nozzles. When finished, the value in **FIRST INSTALLATION** is automatically set to **YES** to make the machine water circuit fill up the next time it is turned on.
5. Switch off the machine.

14. Suspension of the service (temporary inactivity)

If the machine should remain off for more than one week, for any reason, it is necessary to:

- Empty the grinder completely by dispensing espresso coffee till an empty signal is sent out.
- Remove the product canisters from the vending machine and the product chutes from the canisters, clean them with plenty of lukewarm water (product chutes are plugged in).
- Turn the levers intended to fasten the mixing bowls clockwise, remove the dispensing nozzles, pull the mixing bowls and the upper ring; remove the chutes; clean the assembly of disassembled parts with plenty of lukewarm water.
- Remove any trace of residue from the internal surfaces of the machine and clean with a damp cloth.
- Remove any trace of residue from the internal surfaces of the door, above all in the proximity of the cup station.
- Empty the grounds container and the drip tray and clean and clean them with lukewarm running water.
- Empty the hydraulic circuit completely (see the uninstallation procedures).

Before setting the machine at work again, carry out the cleaning and sanitising operations described above.

15. Out of service

15.1. Temporary out of service

- In machine E, carry out the uninstallation cycle.
- In machine I, empty the boiler.
- In machine I, set the boiler water temperature to zero.
- Disconnect the water and power supply.
- Empty the drip tray.
- Remove the grounds container.
- Empty and clean the product canisters.
- Use a wet cloth to clean internal and external surfaces.
- Use a cloth to cover the machine
- Store it in a sheltered place at a temperature not below 5 °C, relative humidity not above 80%.

15.2. Definitive out of service

Should you put the vending machine out of service definitively and provide for the disposal of the components thereof, after carrying out the operations above, disassemble the vending machine by subdividing the parts according to the nature of the materials; the symbol applied means that the components of the vending machine shall not be treated as household waste, but delivered to the dump sites suitable for recycling electric and electronic equipment.

Refer to Directive 2012/19/EU and to the provisions thereof; the complete text of the Directive is available at the following address https://eur-lex.europa.eu/homepage.html

Rhea Vendors Group S.p.A.
viale Trieste, 49 – 21042 Caronno Pertusella – Varese (VA) – Italy
Phone: +39-02-966551
E-mail: rheavendors@rheavendors.com

©2025 rheavendors group