vending machine

spare parts manual

www.rheavendors.com tel: 0039 02 966 551 fax: 0039 02 96 55 086 email: rheavendors@rheavendors.com exclusive property of rheavendors group

cabinet

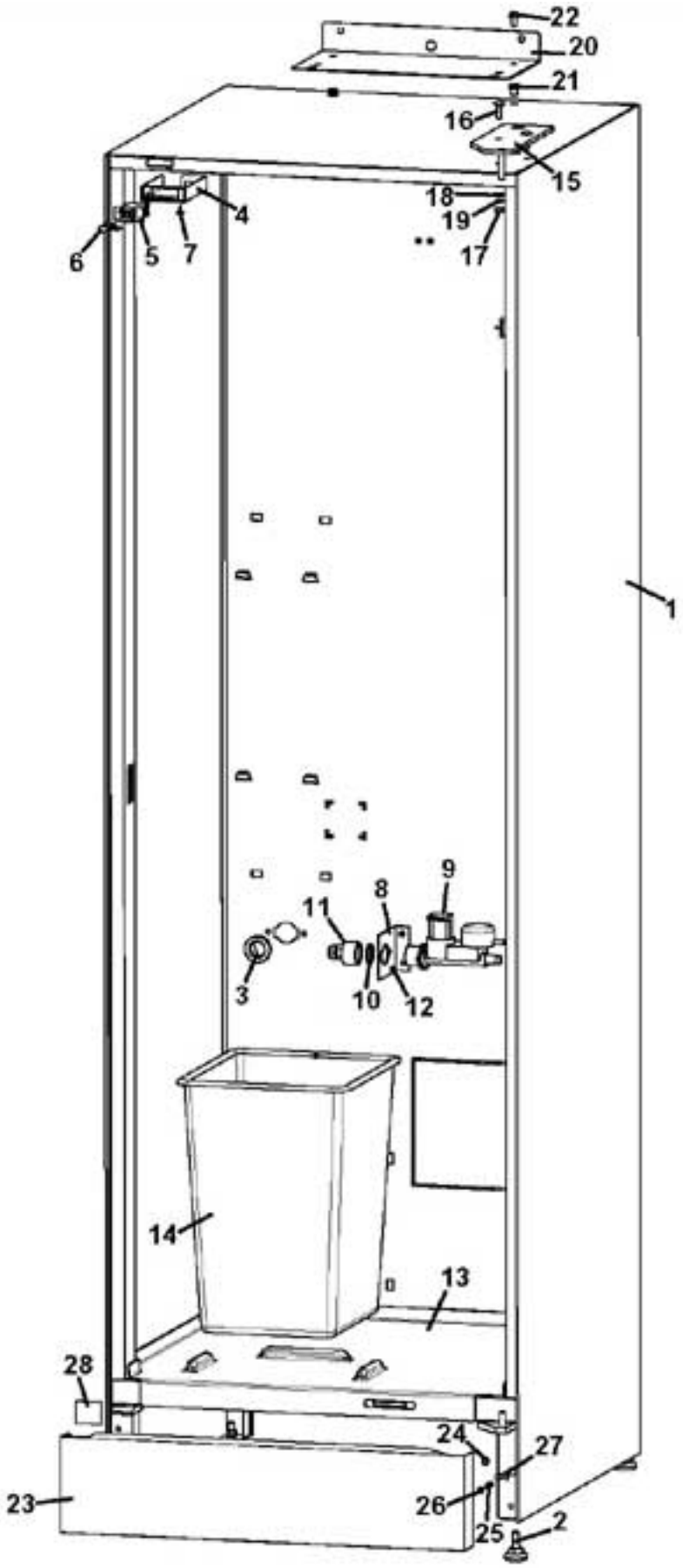

www.rheavendors.com tel: 0039 02 966 551 fax: 0039 02 96 55 086 email: rheavendors@rheavendors.com exclusive property of rheavendors group

cabinet		
Pos.	**Code**	**Description**
1	Z0010014555DAR	CABINET RAL 9022 + PACK
2	VIT0010501	MACHINE FOOT D.30X15
3	GUA0010502	ELECTRICAL GROMMET Ø21
4	Z0270011605-01	DOOR SWITCH SUPPORT
5	ELE0002009	BIPOLAR SWITCH 15A 250V
6	Z0270011109CL	§ SERVICE KEY
7	VIT0002401	SCREW ST HEAD CAP M3.5X9.5
8	Z0070012111CK	INLET H2O VALVE SUP. RAL7037
9	Z0110001119	WATER INLET VALVE 24V DC
10	GUA0000021	OR 130 NBR AL 75 BLACK
11	Z0010019223	H2O INLET CONNECTOR 3/4F-3/8M
12	VIT0002009	SCREW ST HEAD CAP M3.5X6.5
13	Z0010014585NA	BOTTOM PROTECTION
14	CON0000201	BIN
15	Z0010014574	UPPER HINGE
16	VIT0005802	SCREW 6X20
17	VIT0004505	NUT M6
18	VIT0003303	WASHER 6,6X18X1,5
19	VIT0003453	SPRING WASHER 6,4
20	Z0010018071	MACHINE FIXING PLATE
21	VIT0005702	THREADED INSERT
22	VIT0000236	SCREW HEX HEAD M6X11
23	Z0010014575DA	KICK PLATE RAL 9022
24	Z0020018061	SELECTION BUTTON PLUG
25	VIT0009151	PIN M4
26	VIT0004503	NUT M4
27	VIT0009152	WASHER
28	Z0010014238	KICK PLATE

www.rheavendors.com tel: 0039 02 966 551 fax: 0039 02 96 55 086 email: rheavendors@rheavendors.com exclusive property of rheavendors group

external door

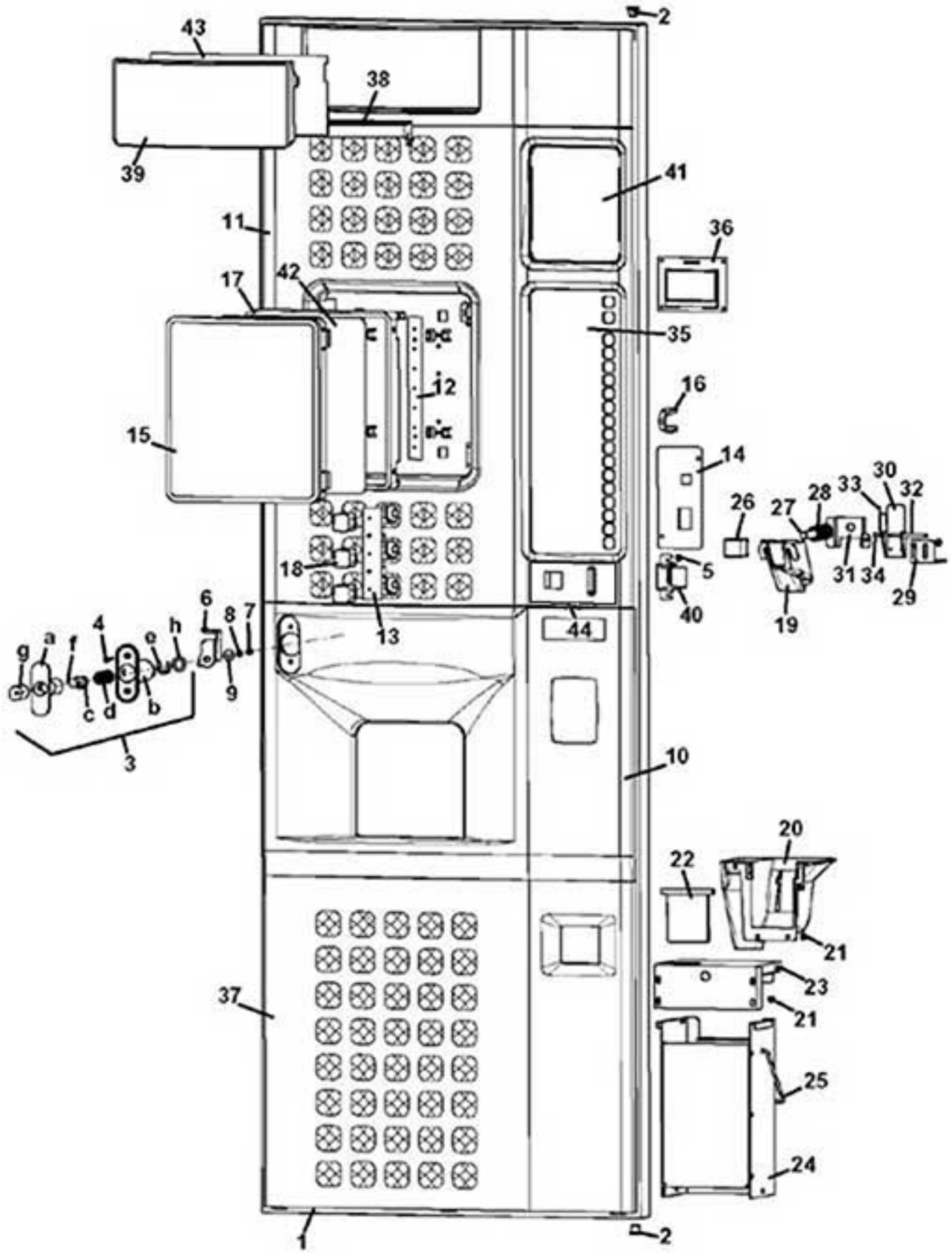

www.rheavendors.com tel: 0039 02 966 551 fax: 0039 02 96 55 086 email: rheavendors@rheavendors.com exclusive property of rheavendors group

external door		
Pos.	**Code**	**Description**
1	Z0020038205DA	DOOR RAL9022
2	Z0020034156	DOOR HINGE BUSH
3_1	1150003337DA	LOCK RAL9022
3_1a	1150002112DA	SLEEVE RAL9022
3_1b	1150003336DA	SLEEVE RAL9022
3_1c	1150002111	PIN
3_1d	1150002113	SPRING
3_1e	VIT0006508	RING 10
3_1f	VIT0005203	DOWEL PIN 4X18
3_1g	SER0000003	LOCK c.7851
3_1h	1150003054	NYLON SPACER MM.20X12,5X1
3_2	1150003342DA	LOCK ASSEMBLY (GREY RAL 9022)
3_2a	1150003336DA	SLEEVE RAL9022
3_2b	1150003336DA	SLEEVE RAL9022
3_2c	1150002111	PIN
3_2d	1150002113	SPRING
3_2e	VIT0006508	RING 10
3_2f	VIT0005203	DOWEL PIN 4X18
3_2g	SER0000022	LOCK
3_2h	1150003054	NYLON SPACER MM.20X12,5X1
4	VIT0000127	SCREW COUNT FLAT HEAD M4X35
5	VIT0004815	NUT M4
6	Z0020038128	LOCK HOOK
7	VIT0000208	SCREW HEX HEAD M5X10
8	VIT0003104	SPRING WASHER 5,3
9	VIT0003302	WASHER 5,5X15X1,6
10		See table cups stop
11	Z0020038221DA	KEYPAD FRAME RAL9022
12	SCH0007820	7 LED BOARD
13	SCH0008940	BOARD 3 LED
14	Z0020038233	LED BOARD HOLDER
15	Z0020038213	PLEXIGLASS PICTURE
16	Z0020042175	PLEXIGLASS HOOK
17	Z0020038214IE	GRAPHIC PANEL FRAME ORANGE
18	Z0020038216IE	SUPPLY DRINK LED PLEXIGL ORANG
19	Z0020042051CY	COINS ENTRY CHUTE RAL9018
20	Z0020042014CY	COINS RETURN CHUTE RAL9018
21	VIT0002401	SCREW ST HEAD CAP M3.5X9.5
22	Z0020038144XC	COINS RETURN FLAP CHROME
23	Z0020038145	COIN BOX LID
24	Z0030006255CL0	§COIN BOX Include cod.Z0030006258 HOOK
25	Z0030006258	COIN BOX HOOK
26	4050010072XC	COIN RETURN BUTTON CHROMO
27	Z0020034023	COIN RETURN PIN
28	4050010074	COIN RETURN BUTTON SPRING
29	Z0020038155	LOWER BRACKET
30	Z0020042057	UPPER BRACKET

www.rheavendors.com tel: 0039 02 966 551 fax: 0039 02 96 55 086 email: rheavendors@rheavendors.com exclusive property of rheavendors group

external door		
31	Z0020038129	COIN RETURN BUTTON CONNECTOR
32	Z0020034187	PIN
33	Z0020005013	COIN REJECT BUTTON SPRING
34	VIT0007005	DUO-CLIPSE 4 PLATE
35		See table KEYBOARD
36	SCH0007080	DISPLAY BOARD
37	Z0020038212DA	COIN RETURN SURROUND (RAL9022)
38	Z0020038211IE	PLEXIGLASS LED ORANGE
39	Z0020038227	UPPER PLEXIGLASS
40	Z0020038260	LOCK PROTECTION
41	Z0020038219DA	SYS. PAYMENT PLATE RAL9022
42		Please communicate the panel needed
43		Please communicate the panel needed
44	Z0020038278	SELF-ADHESIVE METAL PLATE

www.rheavendors.com tel: 0039 02 966 551 fax: 0039 02 96 55 086 email: rheavendors@rheavendors.com exclusive property of rheavendors group

internal door

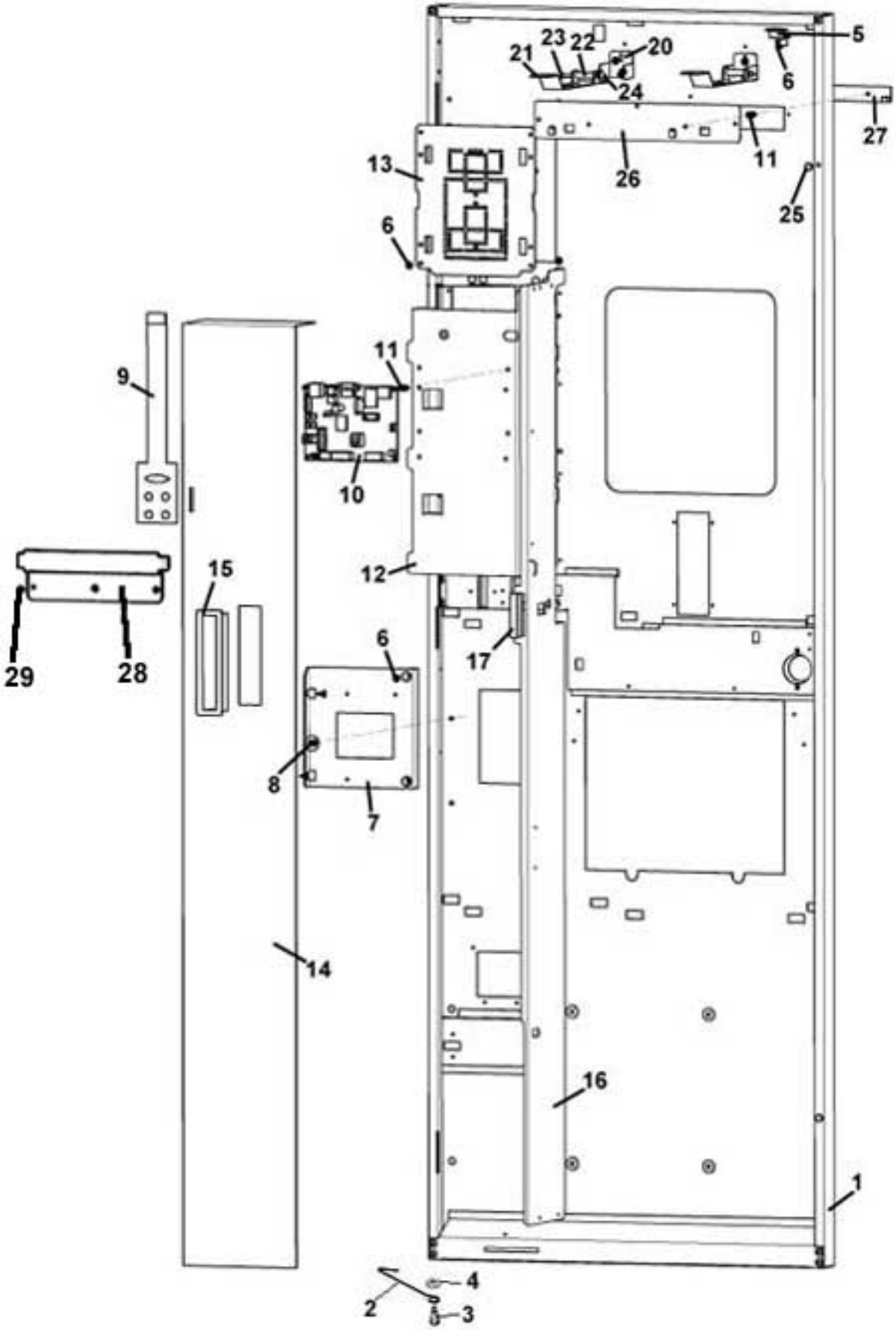

www.rheavendors.com tel: 0039 02 966 551 fax: 0039 02 96 55 086 email: rheavendors@rheavendors.com exclusive property of rheavendors group

internal door		
Pos.	**Code**	**Description**
1	Z0020038205DA	DOOR RAL9022
2	Z0020034172	DOOR STOP
3	Z0020034173	DOOR STOP IN
4	VIT0007102	BENZING CLIP
5	Z0270011485	SWITCH PLATE
6	VIT0002401	SCREW ST HEAD CAP M3.5X9.5
7	Z0020038125	PAYMENT SYSTEM SUPPORT
8	4060010126	PAYM SYSTEM FIXING SCREW
9	Z0020038124	PROGRAMMING KEYPAD
10	SCH0007040	CPU BOARD
11	ELE0062003	BOARD SUPPORT
12	Z0020038255	CPU SUPPORT
13	Z0020038142	PAYMEN SYSTEM PLATE
14	Z0020038592	PAYM SYSTEM COVER
15	Z0020034823	HANDLE
16	Z0020038330	COIN RETURN BOX PROTECTION
17	ELE0000103	MAGNETIC CLICK-LOCK
20	Z0020042124	UPPER HINGE TURRET SUPPORT
21	Z0020038318	TURRET 5COLUMNS UPPER HINGE
22	Z0020038167	HINGE SPACER
23	Z0020034173	DOOR STOP IN
24	VIT0007102	BENZING CLIP
25	Z0020018061	SELECTION BUTTON PLUG
26	Z0020038232	UPPER GLASS LED BOARD SUPPORT
27	SCH0007820	7 LED BOARD
28	Z0020038176	INGREDIENT CANISTER SUPPORT
29	VIT0007021	BLIND RIVET 3X6

www.rheavendors.com tel: 0039 02 966 551 fax: 0039 02 96 55 086 email: rheavendors@rheavendors.com exclusive property of rheavendors group

KEYBOARD

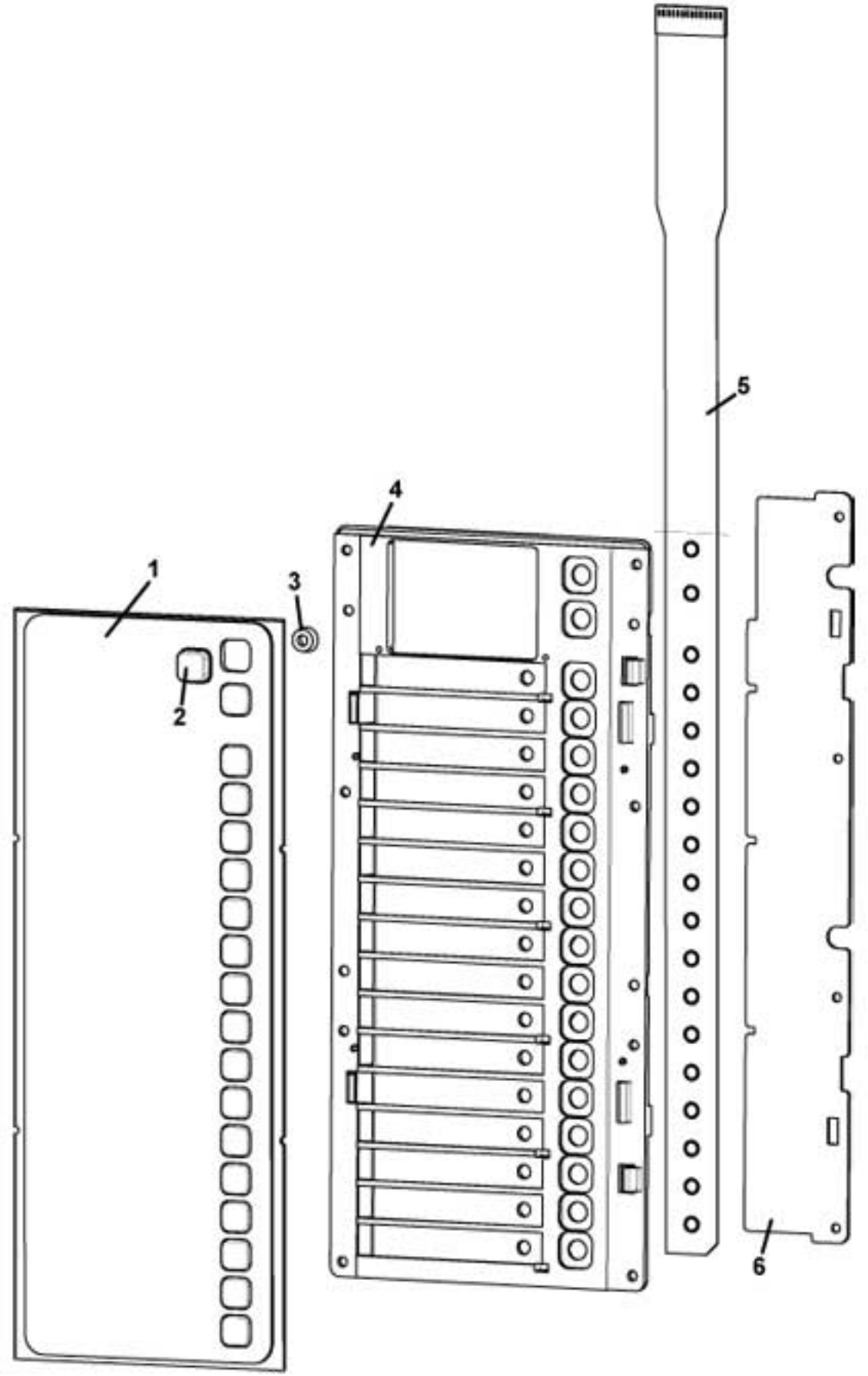

www.rheavendors.com tel: 0039 02 966 551 fax: 0039 02 96 55 086 email: rheavendors@rheavendors.com exclusive property of rheavendors group

KEYBOARD		
Pos.	**Code**	**Description**
1	Z0020038252DAR1	§ PLEXIGLASS FR. PANEL+LABELS
2/a	Z0020038254CF	SELECTION BUTTON RAL7016
2/b	Z0020038254IC	SELECTION BUTTON RAL2011
3	Z0020034311	SPRING
4	Z0020038253	KEYBOARD HOLDER PANEL
5	Z0020038256	KEYPAD 18 BUTTON
6	Z0020038251	KEYPAD SUPPORT
100	Z0020038252DAR	§ PLEXIGLASS FR. PANEL RAL9022

www.rheavendors.com tel: 0039 02 966 551 fax: 0039 02 96 55 086 email: rheavendors@rheavendors.com exclusive property of rheavendors group

cups stop

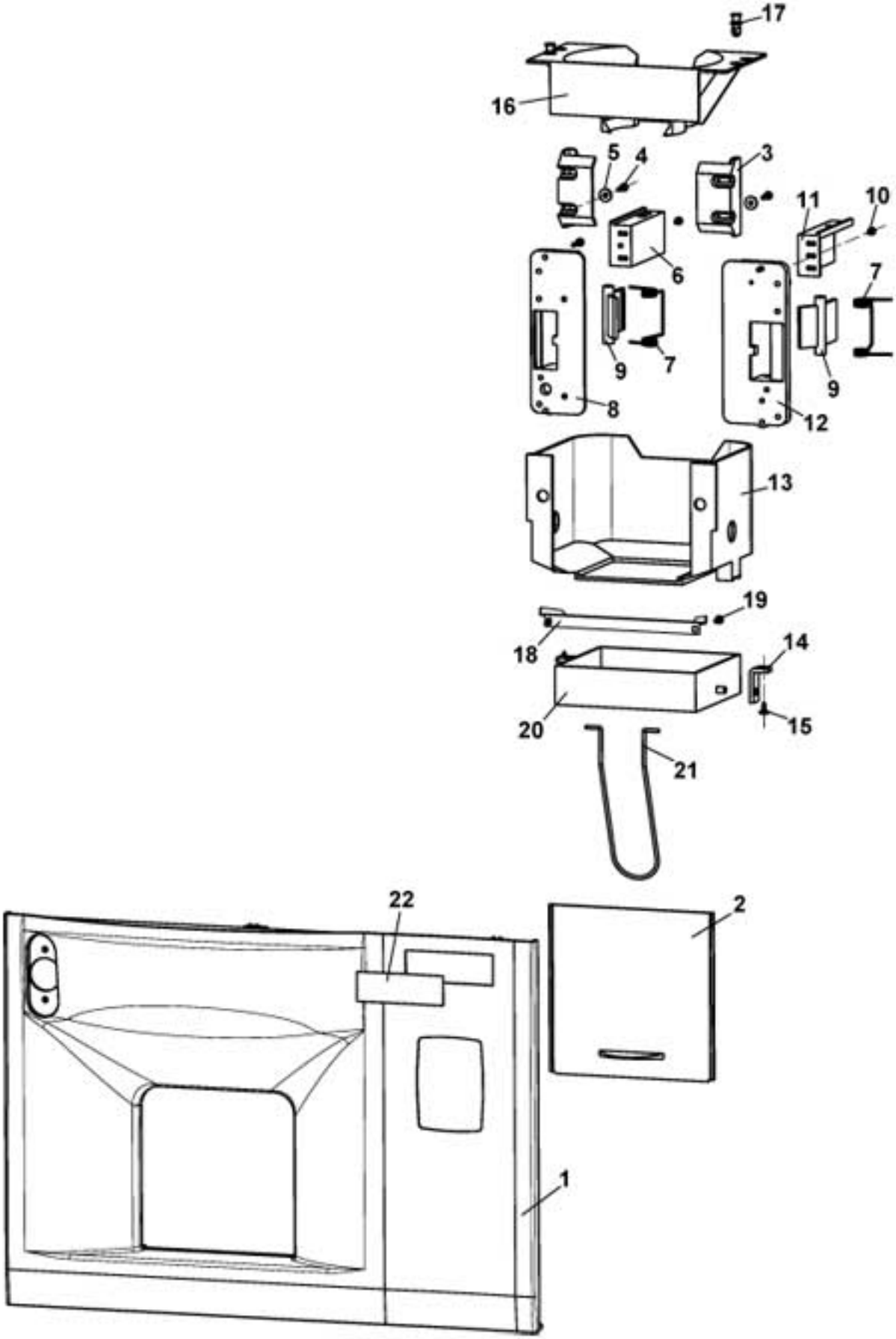

www.rheavendors.com tel: 0039 02 966 551 fax: 0039 02 96 55 086 email: rheavendors@rheavendors.com exclusive property of rheavendors group

cups stop		
Pos.	**Code**	**Description**
1	Z0020038126DA	CUPS STATION FRAME RAL9022
2	Z0400008009/2	CUP STATION FLAP
3	Z0020034168NA	CUP STATION DOOR GUIDE BLACK
4	VIT0002004	SCREW ST HEAD CAP M3.5X13
5	VIT0003301	WASHER 4,3X12X1,5
6	Z0400007020NA	RH BRACKET
7	Z0400007021	SPRING
8	Z0400007027NA	R.H. CUP STAT. PLATE BLACK
9	Z0400007017NA	BLOCK PLATE BLACK
10	VIT0002004	SCREW ST HEAD CAP M3.5X13
11	Z0400007019NA	LH BRACKET
12	Z0400007014NA	L.H. CUP STAT. PLATE BLACK
13	Z0400007003NA	CUPS STATION FRAME BLACK
14	Z0400008101NA	CHUTE SUPPORT BLACK
15	VIT0002401	SCREW ST HEAD CAP M3.5X9.5
16	Z0400007018NA	CUP SUPPORT
17	VIT0007104R	§ BUSH+BUTTON
18	Z0150001056	DRIP TRAY
19	VIT0002469	SCREW HEAD TAP M3.5X10
20	Z0150001052NA	FUNNEL BLACK
21	Z0150001053	DRIP TRAY SPRING
22		Please communicate the language and the configuration needed

www.rheavendors.com tel: 0039 02 966 551 fax: 0039 02 96 55 086 email: rheavendors@rheavendors.com exclusive property of rheavendors group

cups loader

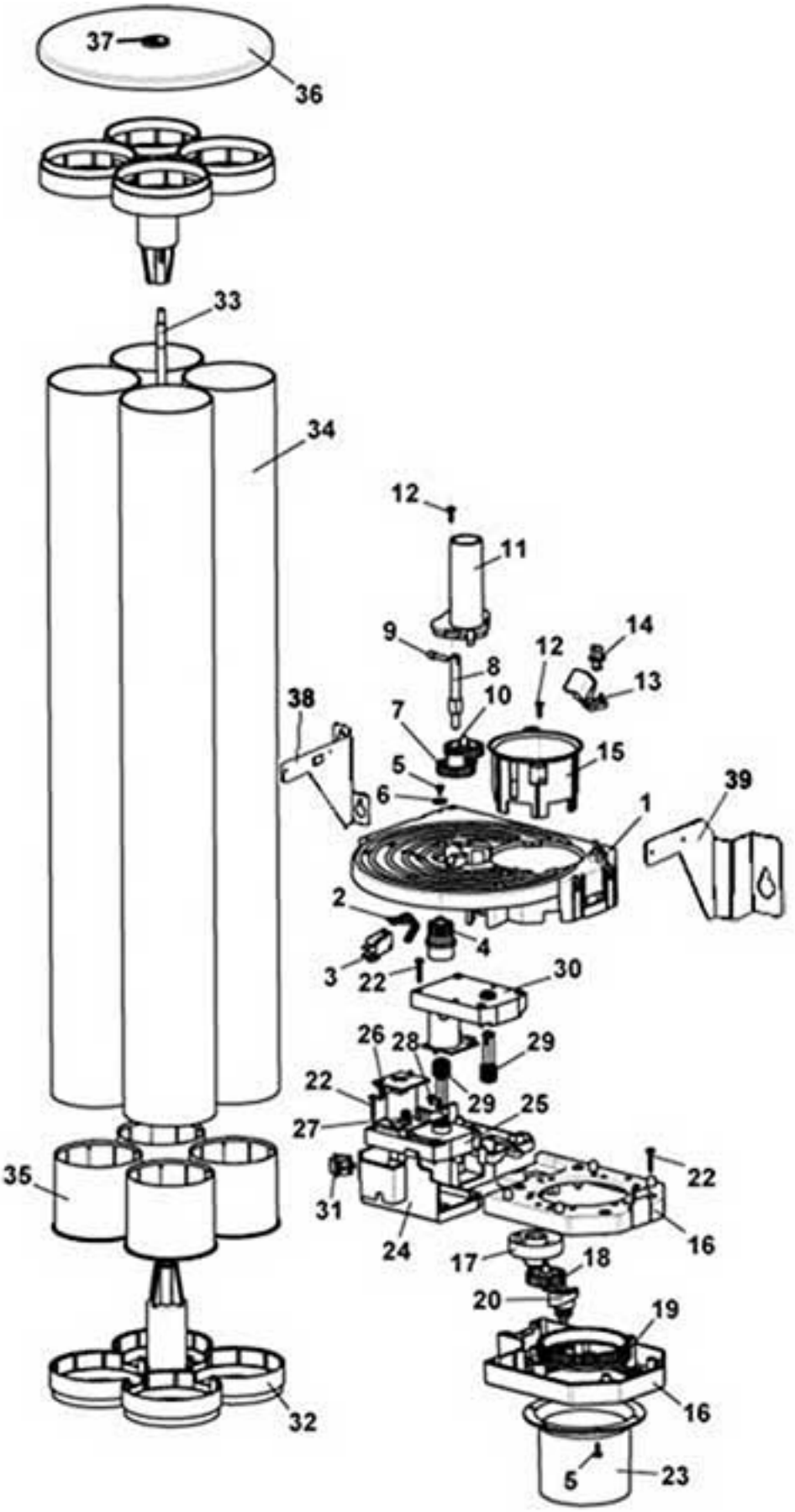

www.rheavendors.com tel: 0039 02 966 551 fax: 0039 02 96 55 086 email: rheavendors@rheavendors.com exclusive property of rheavendors group

cups loader		
Pos.	**Code**	**Description**
1	Z0190006534CY-03	TURRET SUPPORT RAL9018
2	Z0190006543-01	MICROSWITCH LEVER WHITE
3	ELE0001530	MICROSWITCH 3A 125-250VA
4	Z0190006546	CUP DISPENSER MOTOR CONNECTOR
5	VIT0002469	SCREW HEAD TAP M3.5X10
6	VIT0003301	WASHER 4,3X12X1,5
7	Z0190006503	Z26 WHEEL TURRET (WHITE)
8	Z0190006536	TURRET SHAFT
9	Z0190006553	PIN
10	Z0190006544	Z16 PINION WHITE
11	Z0190006547CF	TURRET CUP CONNEC. 5C. RAL7016
12	VIT0002101	SCREW COUNT FLAT HEAD M3.5X13
13	Z0190006554CYR	§ TURRET STOPPER LEVER+PIN Pos.13+14
15/a	Z0190006538CF	CUPS REDUCER D.70 RAL7016
16	Z0190006521CYR	LOWER/UPPER CUP DROP MECH.
17	Z0190006511NA	CUPS TURRET SPINDLE BLACK
18	Z0190006528	Z26 WHEEL WHITE
19/a	Z0190006523	TOOTHED RING NUT D.70/73
19/b	Z0190006507	TOOTHED RING NUT D.78/80 WHITE
20/a	Z0190006506IC	SPLIT UP D.70/78-ORANGE PL
20/b	Z0190006552CI	SPLIT UP D.73-GREY PL
20/c	Z0190006502	CUP SPLITTER D.73/80 PP WHITE
20/d	Z0190006551GJ	SPLIT UP D.70/78-YELLOW PP
22	VIT0002456	SCREW HEAD TAP M3.5X25
23/a	Z0190006514CY	CUPS CHUTE 70/73 RAL9018
23/b	Z0190006515CY	CUPS CHUTE 78/80 RAL9018
24	Z0190006522CY	MOTOR SUPPORT RAL9018
25	Z0090002114R2	§ GEARBOX MOTOR 11RPM 24V DC
26	SCH0007020	MOTOR FILTER
27	SCH0007000	SPLIT UP SENSOR
28	VIT0002002	SCREW ST HEAD CAP M3.5X6.5
29	Z0190006518	TOOTHED SHAFT Z18 WHITE
30	Z0090002123R	§ GEARBOX MOTOR 5,5RPM 24V DC
31	ELE0002258	PUSH BUTTON RED
32	Z0180013111-02CY	CUP TURRET SPINDLE 5C RAL9018
33	Z0180013114	1 TURRET SHAFT
34	Z0180013109	CUP HOLDER 1T D.84/81MM L680MM
35	Z0180013113	D.70 COLUMN REDUCTION (WHITE)
36	Z0180013112CY	CUPS TURRET LID 5C. RAL9018
37	ELT0030560	MAGNET D.8X4
38	Z0020038334	TURRET LEFT SUPPORT-5COLUMNS
39/a	Z0020038122	TURRET RIGHT SUPPORT
39/b	Z0020038335	TURRET RIGHT SUPPORT W/STIR 5C
100	Z0190006522CLR	§ CUPS DISPENSER MOTOR SUPPORT From pos. 24 to pos. 31
101	Z0180013101CL1	§ CUPS TURRET 5COLUMNS D.70/73 From pos. 32 a pos. 36

www.rheavendors.com tel: 0039 02 966 551 fax: 0039 02 96 55 086 email: rheavendors@rheavendors.com exclusive property of rheavendors group

stirrer dispenser

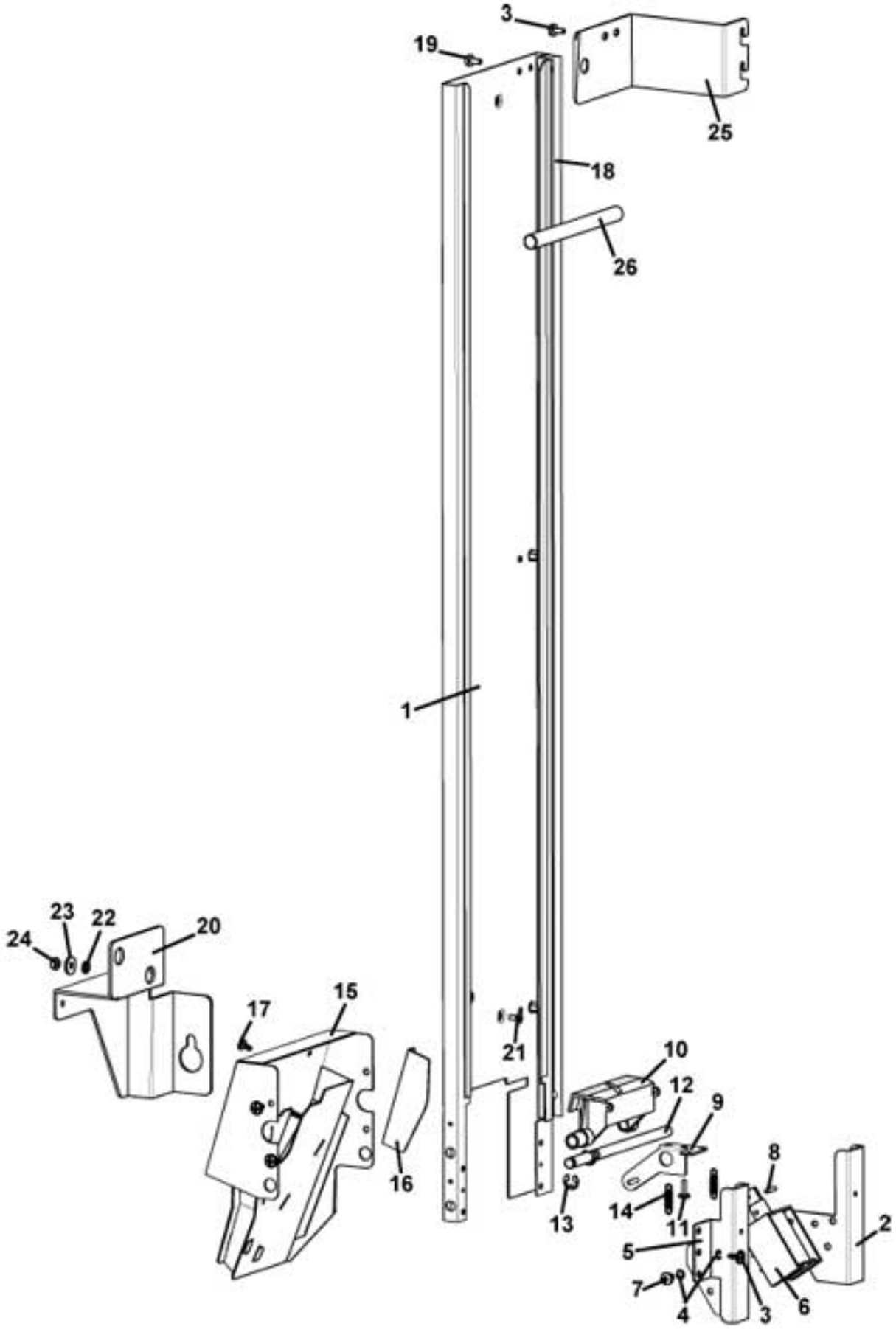

www.rheavendors.com tel: 0039 02 966 551 fax: 0039 02 96 55 086 email: rheavendors@rheavendors.com exclusive property of rheavendors group

stirrer dispenser		
Pos.	**Code**	**Description**
1	Z0450011056	STIRRERS CONTAINER
2	Z0450011063	ELECTROMAGNET RIGHT SUPPORT
3	VIT0002401	SCREW ST HEAD CAP M3.5X9.5
4	VIT0003405	SPRING WASHER 4,3
5	Z0450011064	ELECTROMAGNET LEFT SUPPORT
6	ELE0000055	ELECTROMAGNET 5% 24V DC
7	VIT0000021	SCREW HEAD TAP CAP M4X6
8	VIT0005211	DOWEL PIN 2.5X12
9	Z0450011065	STIRRER EJECTOR CONNECTING ROD
10	Z0450002003	STIRRER EJECTOR
11	VIT0002469	SCREW HEAD TAP M3.5X10
12	Z0450011066	STIRRER EJECTOR PIN
13	VIT0006504	RING 5
14	Z0450003010	SPRING
15	Z0450011106	STIRRER FUNNEL
16	Z0450011112	INTERNAL WALL
17	VIT0002009	SCREW ST HEAD CAP M3.5X6.5
18	Z0450011057	STIRRER CONTAINER GUIDE
19	VIT0000030	SCREW HEAD TAP CAP M4X7
20	Z0020038335	TURRET RIGHT SUPPORT W/STIR 5C
21	VIT0000106	SCREW COUNT FLAT HEAD M4X8
22	VIT0003103	SPRING WASHER 4,3
23	VIT0003302	WASHER 5,5X15X1,6
24	VIT0004503	NUT M4
25	Z0020038166	STIRRERS REINFORCEMENT
26/a	4001012030	STIRRER WEIGHT 89MM
26/b	Z0450003033	STIRRER WEIGHT 104MM
100	Z0450011100CL	§ STIRRER DISPENSER 89 From pos. 1 to pos. 19
101	Z0450011101CL	§ STIRRER DISPENSER 104 From pos.1 to pos. 19 (excluded pos. 16 and 17)

www.rheavendors.com tel: 0039 02 966 551 fax: 0039 02 96 55 086 email: rheavendors@rheavendors.com exclusive property of rheavendors group

solubles dispenser H

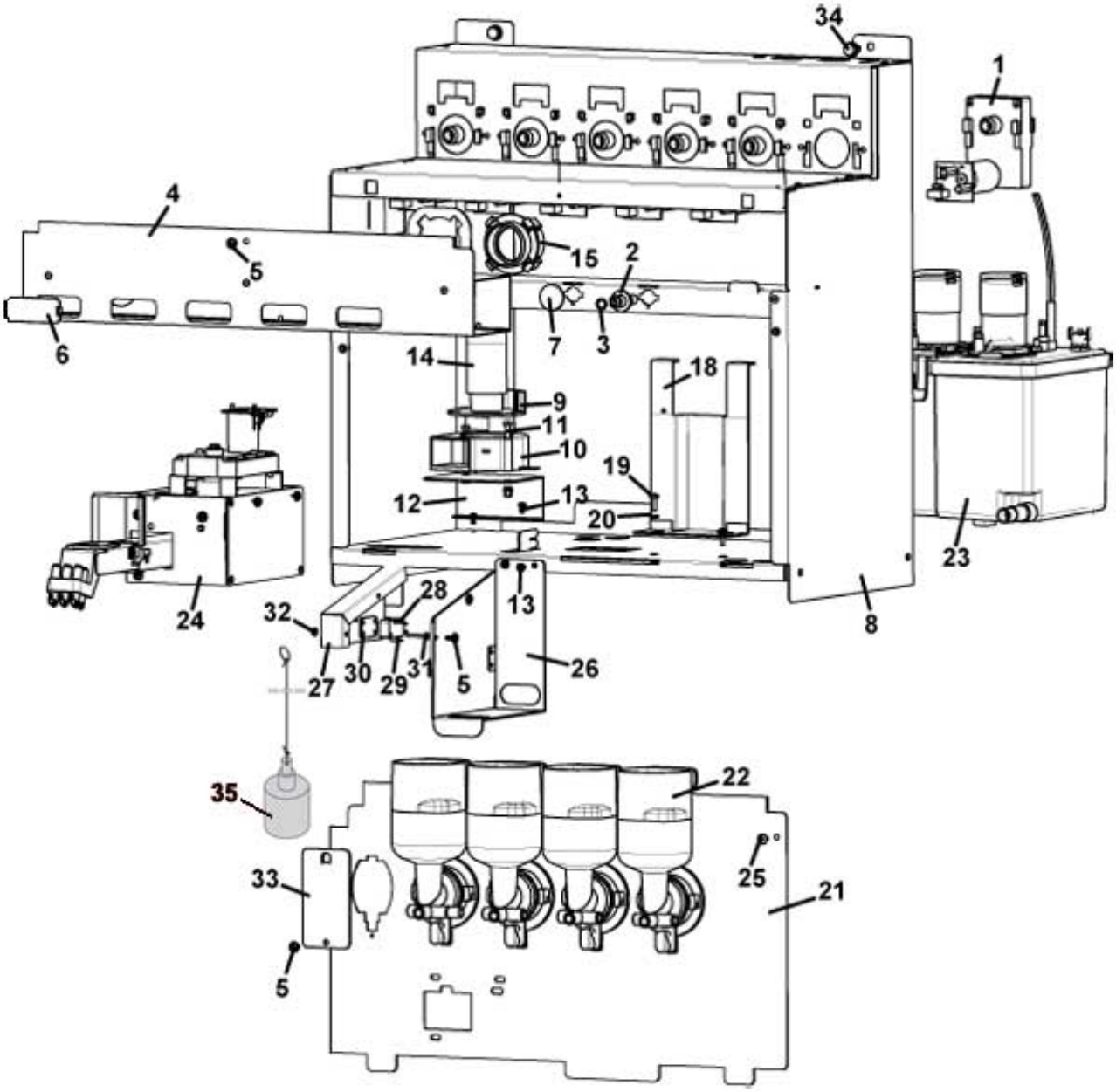

www.rheavendors.com tel: 0039 02 966 551 fax: 0039 02 96 55 086 email: rheavendors@rheavendors.com exclusive property of rheavendors group

solubles dispenser H		
Pos.	**Code**	**Description**
1	Z0090002113R	§ GEARBOX MOTOR 24V DC+FILTER
2	Z0080100043	MIXER CONNECTOR BLACK
3	GUA0000089	OR 2031 RED SILICONE A70
4	Z0070014935CL	§ HOUSING
5	VIT0002401	SCREW ST HEAD CAP M3.5X9.5
6	Z0070014776	TRAP PLUG
7	Z0080100035NA	CONNECTOR PLUG BLACK
8	Z0070014905-05	HOUSING H6/7
9	Z0010014071	TRAP CONNECTOR
10	ELE0000465R	§ TRAP 24V DC
11	VIT0000235	SCREW HEX HEAD M4X40
12	Z0070014625	FAN SUPPORT
13	VIT0002009	SCREW ST HEAD CAP M3.5X6.5
14	TEOL000002	EXTRACTOR TUBE D.30
15	Z0070020019CY	EXTRATOR TUBE SUPPORT
18	Z0070021013	BOILER BRACKET
19	VIT0001005	SCREW HEAD TAP CAP M4X12
20	VIT0003109	SPRING WASHER 4,3
21	Z0070014912	MIXER SUPPORT I
22		See table mixer
23		See table boiler
24		See table distribution pipes movement
25	VIT0000030	SCREW HEAD TAP CAP M4X7
26	Z0070020231	PIPE SUPPORT GUIDE
27	Z0070020037	SWITCH COVER
28	ELE0001528	MICROSWITCH
29	NL201106265	MICRO LEVER
30	4600010014	SPACER
31	VIT0000007	SCREW HEAD TAP CAP M3X20
32	VIT0004701	NUT M3
33	Z0010020028NA	MIXER PLUG BLACK
34	VIT0000236	SCREW HEX HEAD M6X11
35	Z0070020038CL1	§ WASTE FLOAT

www.rheavendors.com tel: 0039 02 966 551 fax: 0039 02 96 55 086 email: rheavendors@rheavendors.com exclusive property of rheavendors group

mixer

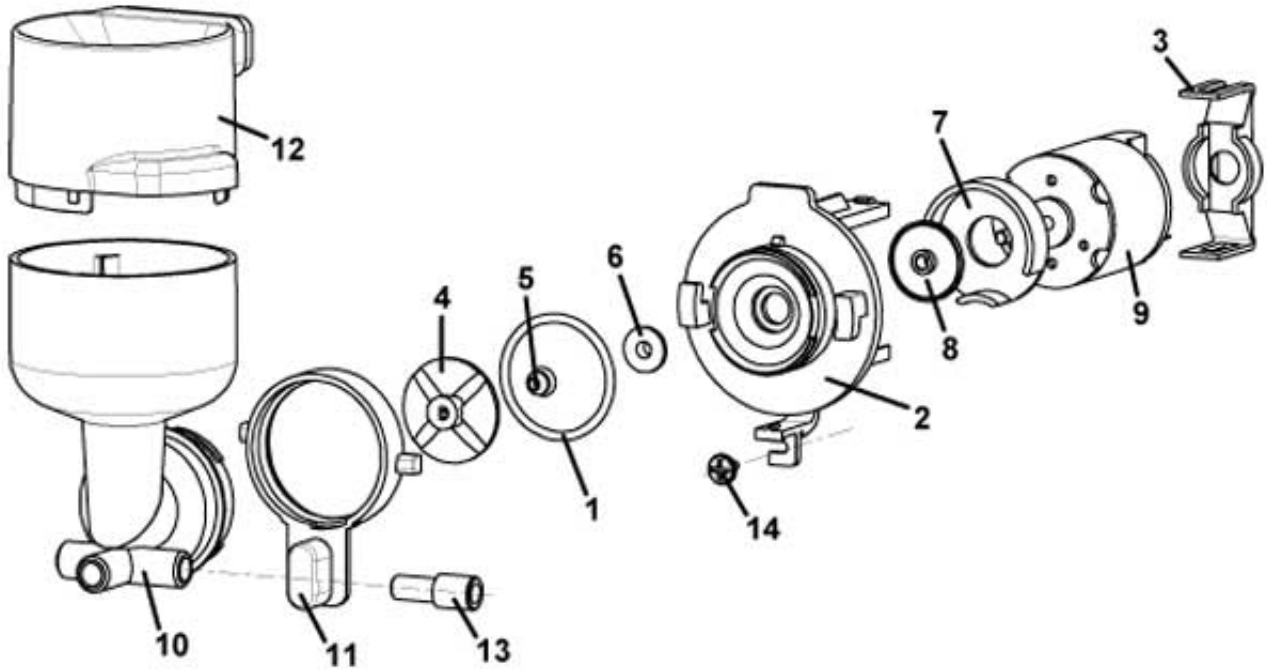

www.rheavendors.com tel: 0039 02 966 551 fax: 0039 02 96 55 086 email: rheavendors@rheavendors.com exclusive property of rheavendors group

mixer		
Pos.	**Code**	**Description**
1	GUA0000084	OR 3131 RED SILICONE A60
2	Z0080100005	MOTOR MIXER BASE
3	Z0080100009IC	MIXER MOTOR SUPPORT RAL2011
4	Z0080100011	MIXER FAN
5	Z0080100102	MIXER SHAFT GASKET
6	Z0080100015	MIXER BUSH
7	Z0080100023IC	MIXER COVER RAL2011
8	Z0080100024	MIXER FAN
9	Z0090003023	MIXER MOTOR 24V DC SHAFT D.4
10/a_1	Z0080200110L	MIXING BOWL L.W/H20 BREAKER
10/a_2	Z0080200111R	MIXING BOWL R.W/H20 BREAKER
10/a_3	Z0080200112C	MIXING BOWL F.W/H20 BREAKER
10/b_1	Z0080200107L	MIXING BOWL L.W/O H2O BREAKER
10/b_2	Z0080200108R	MIXING BOWL R.W/O H2O BREAKER
10/b_3	Z0080200109C	MIXER BODY W/O LINE CENTER
11	Z0080100006IC	LOCK RING RAL2011
12/a	Z0080100031NA	MIXING BOWL EXTRACTOR D.4,25
12/b	Z0080100029CK	MIXING BOWL EXTRACTOR D.2,3
13/a	Z0080100096	COFFEE OUTLET REDUCTION D.2
13/b	Z0080100095	TUBE REDUCER D.4
14	VIT0002401	SCREW ST HEAD CAP M3.5X9.5
100	Z0080100001R	§ MIXER BOWL BASE+MOTOR (from pos.1 to pos.9)

www.rheavendors.com tel: 0039 02 966 551 fax: 0039 02 96 55 086 email: rheavendors@rheavendors.com exclusive property of rheavendors group

boiler

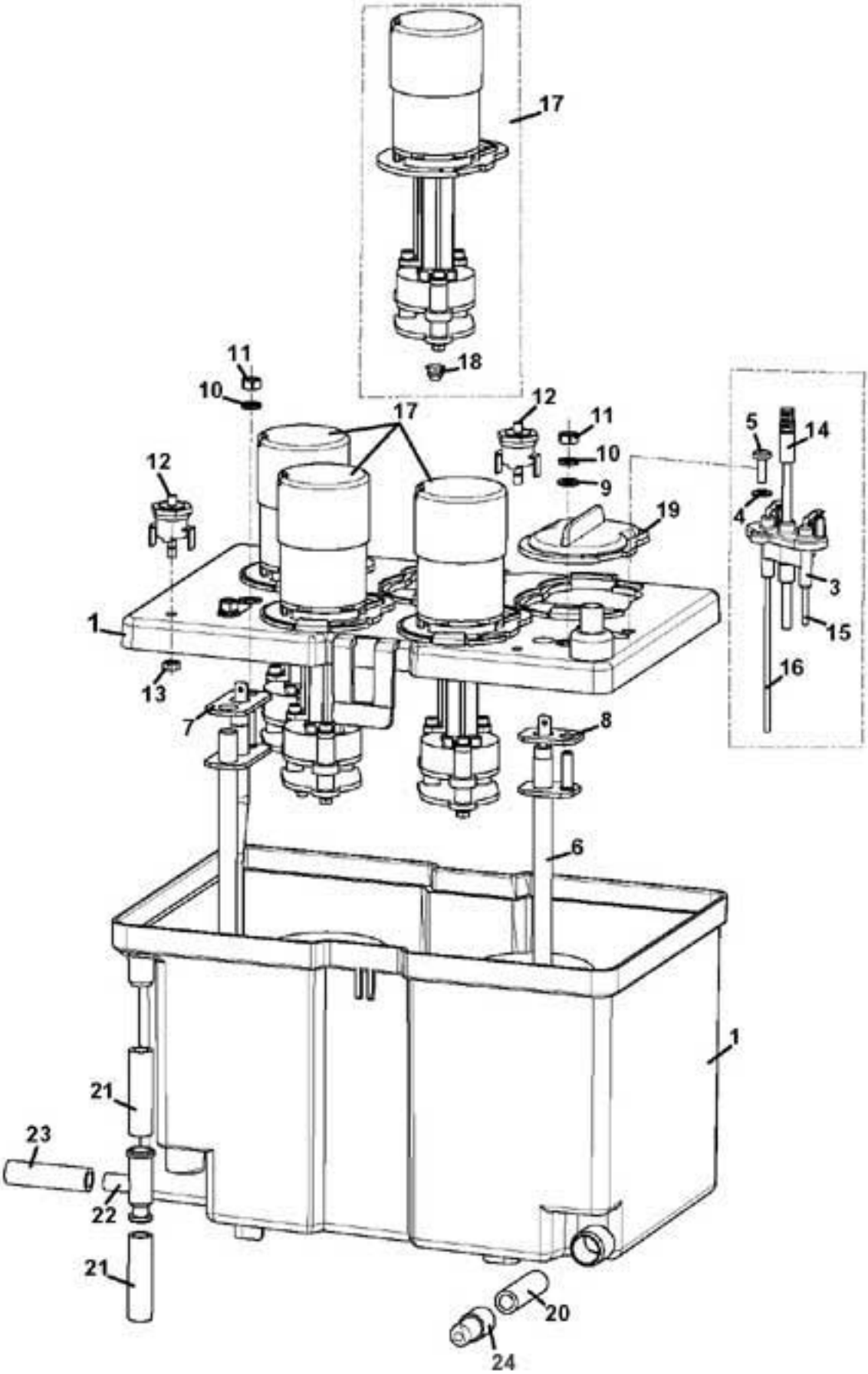

www.rheavendors.com tel: 0039 02 966 551 fax: 0039 02 96 55 086 email: rheavendors@rheavendors.com exclusive property of rheavendors group

boiler		
Pos.	**Code**	**Description**
1	Z0600014111R	§ TANK+BOILER COVER
3	Z0600016089	PROBE SUPPORT
4	VIT0003211	WASHER 4,3X9X0,8
5	VIT0001005	SCREW HEAD TAP CAP M4X12
6	Z0600016138R	§ HEATING ELEMENT 1600W 230V
7	Z0600014113-02	HEATING ELEM GASKET
8	Z0600014114-01	BOILER STRENGHT GASKET 5P
9	VIT0003203	WASHER 5,3X10X1
10	VIT0003111	SPRING WASHER 5,3
11	VIT0004804	NUT M5
12	ELE0000965	CLIXSON 88°
13	VIT0004816	NUT M4
14	ELE0000978R	SOLUBLES PROBE 80MM
15	Z0600016054	MAXIMUM LEVEL PROBE
16	Z0600016053	MINIMUM LEVEL PROBE
17	Z0600016405R	§ BOILER PUMP
18	Z0080100102	MIXER SHAFT GASKET
19	Z0600016422	PUMP LID
20/a	TSIL10/14T-10	SILICON HOSE 10X14 MT.10
20/b	TSIL10/14T-50	SILICON HOSE 10X14 MT.50
21/a	TSIL07/11T-10	SILICON HOSE 7X11 MT.10
21/b	TSIL07/11T-50	SILICON HOSE 7X11 MT.50
22	Z0600016028	T CONNECTOR
23/a	TSIL05/08T-10	SILICON HOSE 5X8 MT.10
23/b	TSIL05/08T-10	SILICON HOSE 5X8 MT.10
24	650001057	DRAINER PLUG
100	Z0600014100R3	§ BOILER 4PUMP
101	Z0600014101R3	§ BOILER 3PUMP 1600W 230V

www.rheavendors.com tel: 0039 02 966 551 fax: 0039 02 96 55 086 email: rheavendors@rheavendors.com exclusive property of rheavendors group

distribution pipes movement

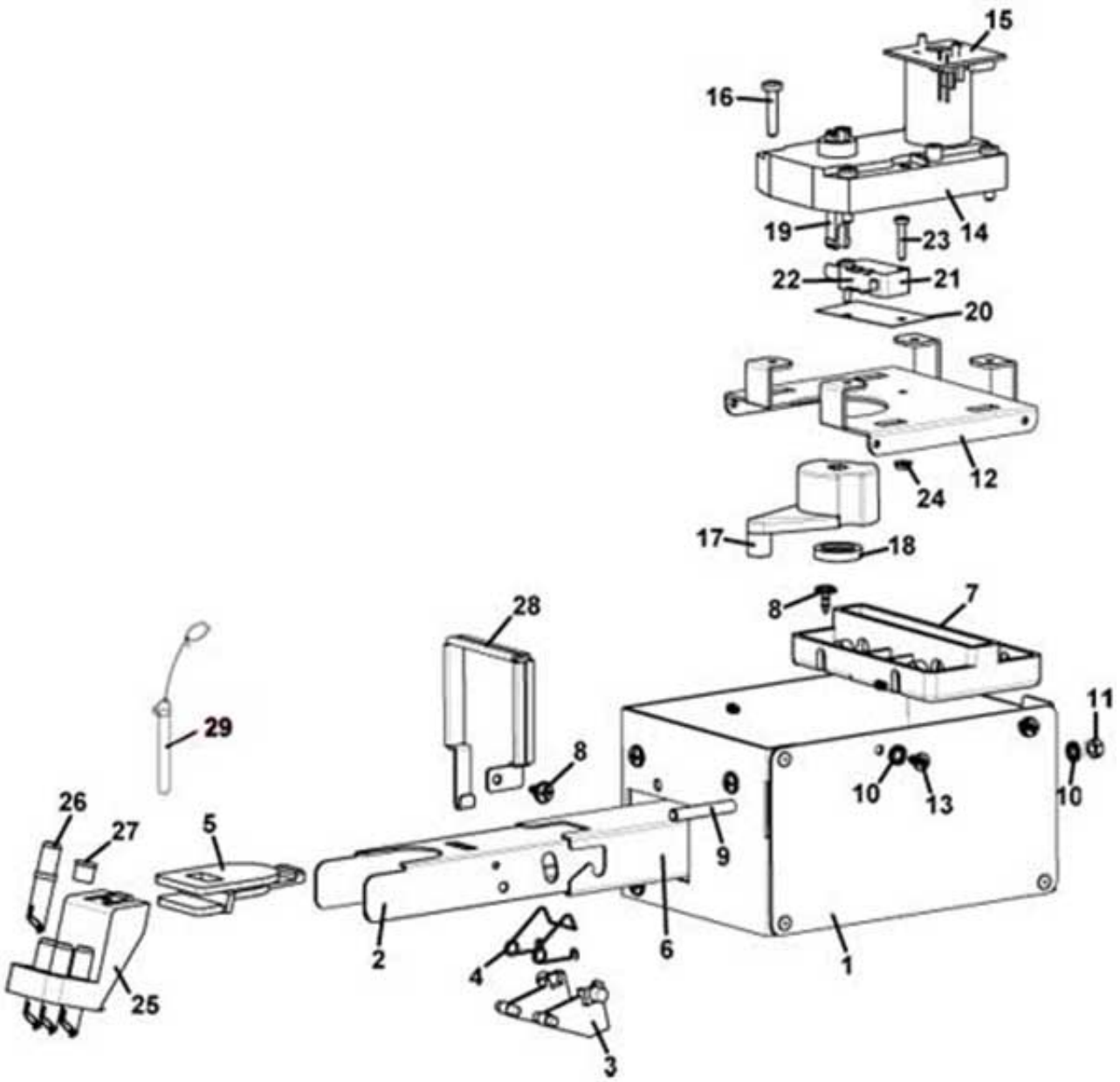

www.rheavendors.com tel: 0039 02 966 551 fax: 0039 02 96 55 086 email: rheavendors@rheavendors.com exclusive property of rheavendors group

distribution pipes movement		
Pos.	**Code**	**Description**
1	Z0380010805	PIPE MOVEMENT HOUSING
2	Z0380010616	NOZZLE HOLDER
3	Z0380010599	NOZZLE MOVEMENT BUTTON
4	Z0380010629	SPRING
5	Z0380010459NA	NOZZLE SUPPORT PLATE BLACK
6	Z0380010683	PIPE SUPPORT GUIDE
7	Z0380010692	PIPE SUPPORT GUIDE
8	VIT0002004	SCREW ST HEAD CAP M3.5X13
9	Z0380010808	SHAFT
10	VIT0003103	SPRING WASHER 4,3
11	VIT0004503	NUT M4
12	Z0380010693	GEAR MOTOR SUPPORT
13	VIT0002009	SCREW ST HEAD CAP M3.5X6.5
14	Z0090002114R1	§ GEARBOX MOTOR 11RPM 24V DC
15	SCH0003740	MOTOR FILTER
16	VIT0000035	SCREW HEAD TAP CAP M4X20
17	Z0380010694	NOZZLE MOVEMENT CAM
18	Z0380010831	BUSH 20x4
19	Z0380010421	GEARBOX MOTOR SHAFT
20	7500902054	ISOLATION
21	ELE0001528	MICROSWITCH
22	ELE0001906	MICROSWITCH LEVER
23	VIT0000006	SCREW HEAD TAP CAP M3X16
24	VIT0004701	NUT M3
25	Z0380010655NA/L	NOZZLES HOLDER
26	Z0380010657NA	ESPRESSO NOZZLE D. 5,7
27	Z0380010656NA	PLUG BLACK
28	Z0380010882NA	CLAMP FIXING PIPES
29	Z0380010429CL	§ FIXING PLATE PIN
100	Z0380010800R	§ NOZZLE MOVEMENT

www.rheavendors.com tel: 0039 02 966 551 fax: 0039 02 96 55 086 email: rheavendors@rheavendors.com exclusive property of rheavendors group

solubles dispenser E

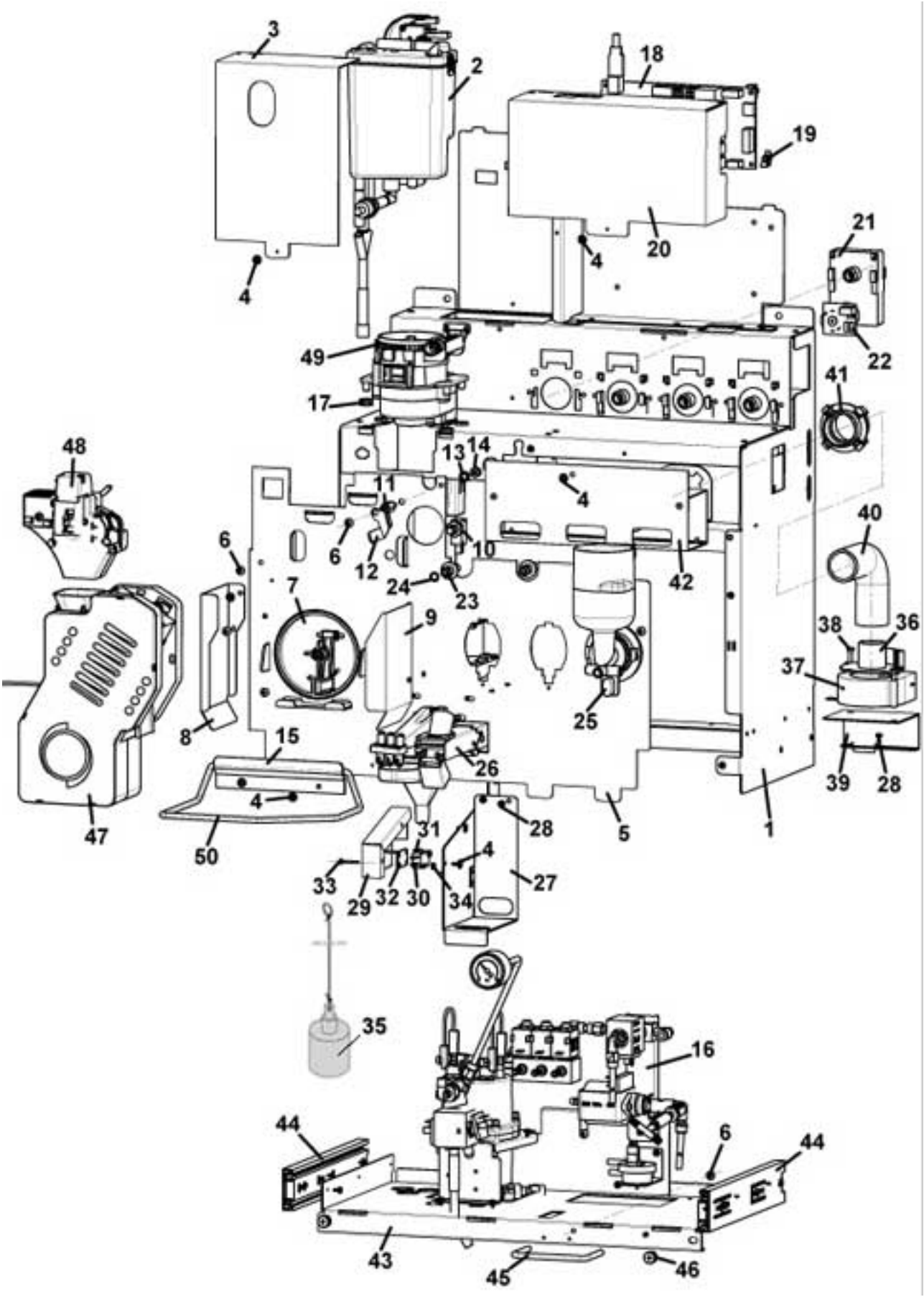

www.rheavendors.com tel: 0039 02 966 551 fax: 0039 02 96 55 086 email: rheavendors@rheavendors.com exclusive property of rheavendors group

solubles dispenser E		
Pos.	**Code**	**Description**
1	Z0070015105	RIVETED MIXED E SOLUBLES HOUSI
2		See table water inlet panel
3	Z0070015117	AIR BREAK COVER
4	VIT0002401	SCREW ST HEAD CAP M3.5X9.5
5	Z0070015121	MIXER SUPPORT E
6	VIT0000030	SCREW HEAD TAP CAP M4X7
7		See table COFFEE BEANS GROUP SUPPORT
8	Z0260010207CK	COFFEE POWDER CHUTE RAL7037
9	Z0260010112	GROUNDS CHUTE
10	ELE0001506	MICROSWITCH
11	Z0010020196	BREWER FIX LEVER
12	Z0010020132	FIXING PLATE
13	VIT0003105	SPRING WASHER 6,4
14	VIT0004505	NUT M6
15	Z0260005022	GROUNDED COFFEE BAG SUPP PLATE
16		
17	GUA0010003	ELETRICAL GROMMET
18	SCH0007403-01	2M FS COFFEE BREWER BOARD
19	ELE0062008	BOARD SUPPORT
20	Z0070016229	BOARD COVER
21	Z0090002113	MOTOR 24 DC 97 RPM
22	SCH0003760	MOTOR FILTER
23	Z0080100043	MIXER CONNECTOR BLACK
24	GUA0000089	OR 2031 RED SILICONE A70
25		See table mixer
26		See table distribution pipes movement
27	Z0070015145	PIPE GUIDE
28	VIT0002009	SCREW ST HEAD CAP M3.5X6.5
29	Z0070015146	MICRO SWITCH PROTECTION
30	ELE0001528	MICROSWITCH
31	NL201106265	MICRO LEVER
32	4600010014	SPACER
33	VIT0000006	SCREW HEAD TAP CAP M3X16
34	VIT0004701	NUT M3
35	Z0070020038CL1	§ WASTE FLOAT
36	Z0010014071	TRAP CONNECTOR
37	ELE0000465R	§ TRAP 24V DC
38	VIT0000235	SCREW HEX HEAD M4X40
39	Z0070015142	FAN SUPPORT
40	TEOL000002	EXTRACTOR TUBE D.30
41	Z0070020019CY	EXTRATOR TUBE SUPPORT
42	Z0070014665	TRAP E
43	Z0070016308-03	MIXERS HOUSING BOTTOM
44	Z0070015144	TELESCOPICS GUIDE
45	Z0070015143	BOTTOM EXTRACTABLE HANDLE
46	Z0180012157	SCREW
47/a		See table micro coffee group

www.rheavendors.com tel: 0039 02 966 551 fax: 0039 02 96 55 086 email: rheavendors@rheavendors.com exclusive property of rheavendors group

solubles dispenser E		
47/b		See table heated micro coffee group
48		See table plastic batcher with setting
49		See table vertical mill groups
50	Z0260005021	GROUNDED COFFEE BAG RING

www.rheavendors.com tel: 0039 02 966 551 fax: 0039 02 96 55 086 email: rheavendors@rheavendors.com exclusive property of rheavendors group

ADDITIONAL GEAR MOTOR SUPPORT

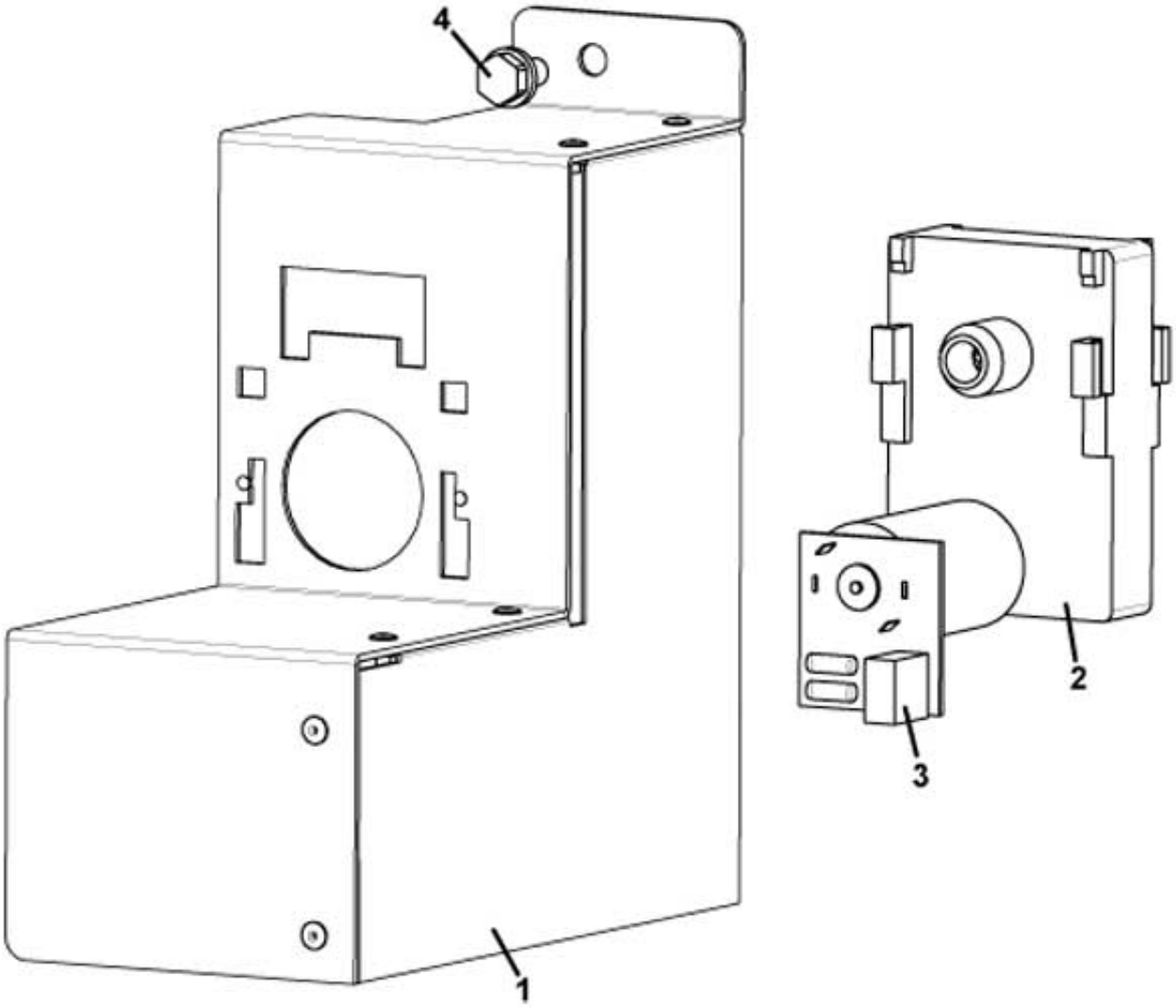

www.rheavendors.com tel: 0039 02 966 551 fax: 0039 02 96 55 086 email: rheavendors@rheavendors.com exclusive property of rheavendors group

ADDITIONAL GEAR MOTOR SUPPORT		
Pos.	**Code**	**Description**
1	Z0070014680	GEARBOX MOTOR SUPPORT E5
2	Z0090002113	MOTOR 24 DC 97 RPM
3	SCH0003760	MOTOR FILTER
4	VIT0000236	SCREW HEX HEAD M6X11

www.rheavendors.com tel: 0039 02 966 551 fax: 0039 02 96 55 086 email: rheavendors@rheavendors.com exclusive property of rheavendors group

water inlet panel

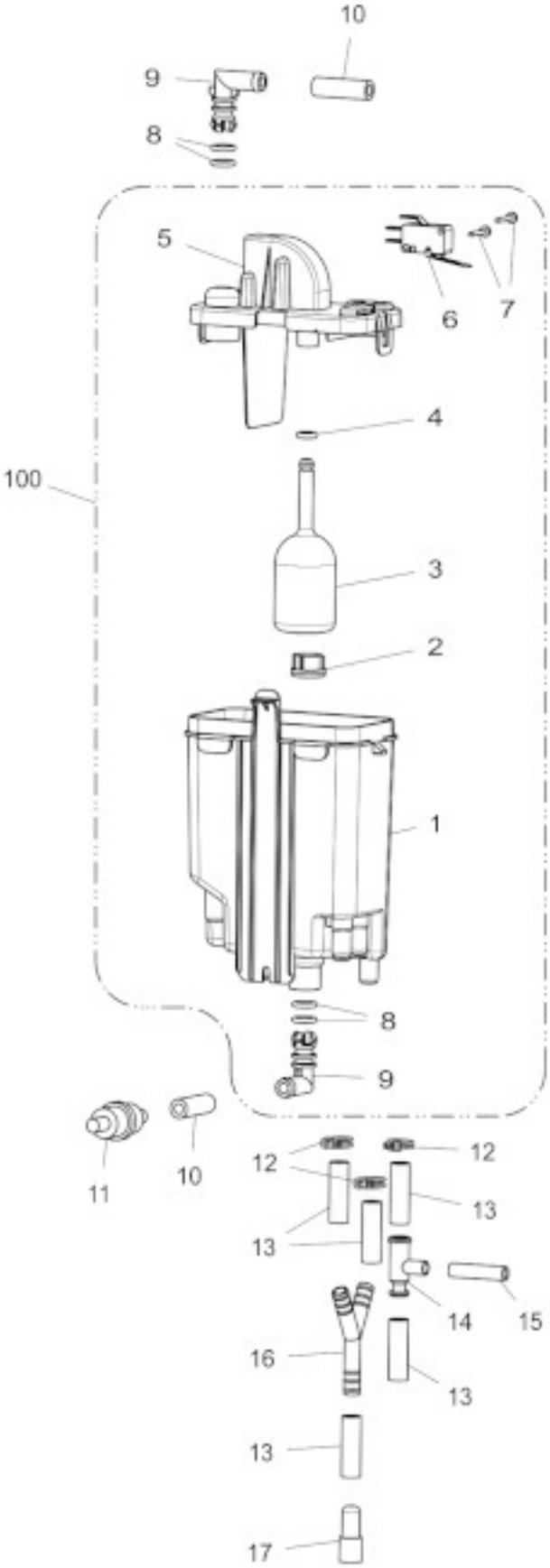

www.rheavendors.com tel: 0039 02 966 551 fax: 0039 02 96 55 086 email: rheavendors@rheavendors.com exclusive property of rheavendors group

water inlet panel		
Pos.	**Code**	**Description**
1	Z0800013041	AIR BREAK TANK
1	Z0800013041	AIR BREAK TANK
2	Z0110020007	PLASTIC FILTER DIAM. 20
3	Z0800013046	AIR BREAK WASTE FLOAT
4	GUA0000082	SILICON GASKET D.6
5	Z0800013043	AIR BREAK COVER
6	ELE0001514	MICROSWITCH 3A 125-250VA
7	VIT0002013	SCREW ST HEAD CAP M2.9X19
8	GUA0000043	OR 109 NBR AL 75 BLACK
9	Z0800009211	ELBOW CONNECTOR
10/a	TSIL06/11T-10	SILICON HOSE 6X11 MT.10
10/b	TSIL06/11T-50	SILICON HOSE 6X11 MT.50
11	Z0109002002	H2O FILTER
12	FASC000109	CLAMP
13/a	TSIL07/11T-10	SILICON HOSE 7X11 MT.10
13/b	TSIL07/11T-50	SILICON HOSE 7X11 MT.50
14	Z0600016028	T CONNECTOR
15/a	TSIL05/08T-10	SILICON HOSE 5X8 MT.10
15/b	TSIL05/08T-50	SILICON HOSE 5X8 MT.50
16	Z0100001065	CONNECTOR "Y"
17	650001057	DRAINER PLUG
100	Z0800014001R	§ AIR BREAK FS

www.rheavendors.com tel: 0039 02 966 551 fax: 0039 02 96 55 086 email: rheavendors@rheavendors.com exclusive property of rheavendors group

COFFEE BEANS GROUP SUPPORT

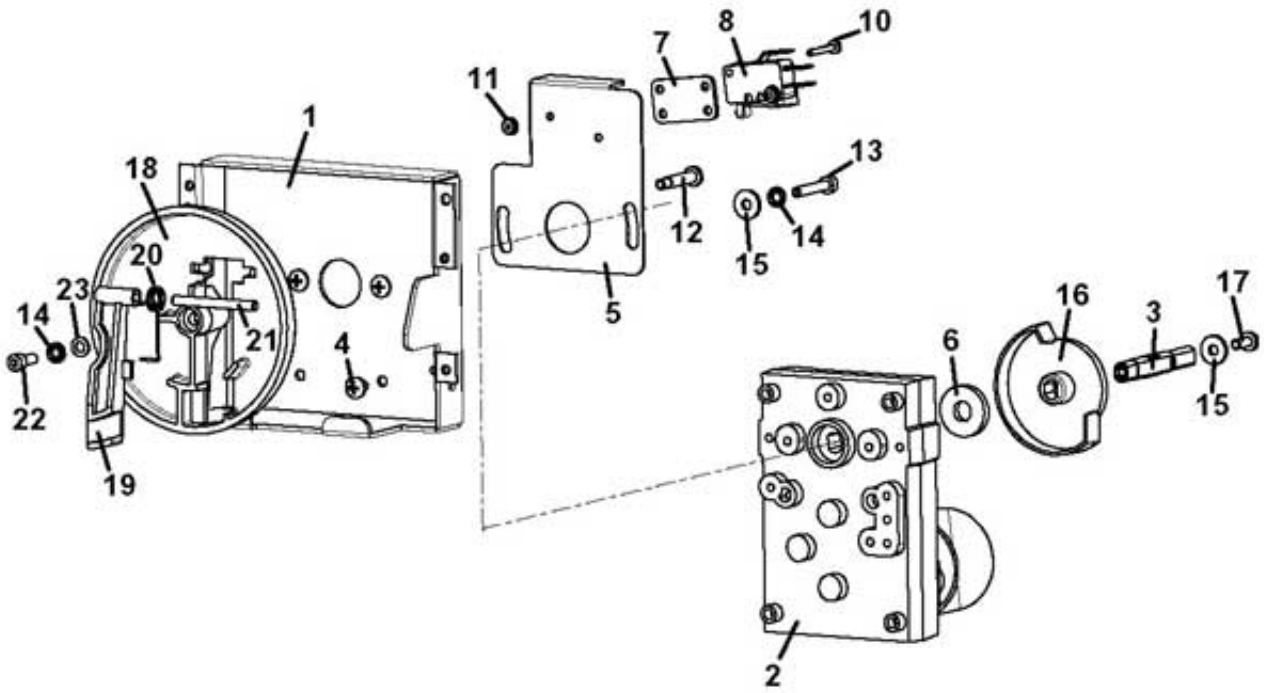

www.rheavendors.com tel: 0039 02 966 551 fax: 0039 02 96 55 086 email: rheavendors@rheavendors.com exclusive property of rheavendors group

COFFEE BEANS GROUP SUPPORT		
Pos.	**Code**	**Description**
1	Z0260010102CK-06	MICRO GROUP MOTOR SUPPORT 7037
2	Z0090002191R	§ GEARBOX MOTOR 11RPM 24V DC Pos. 2+3
3	Z0090002191R	§ GEARBOX MOTOR 11RPM 24V DC Pos. 2+3
4	VIT0000030	SCREW HEAD TAP CAP M4X7
5	Z0250008093	MICRO PLATE
6	Z0250008091	SPACER
7	4600010014	SPACER
8	ELE0001529	MICROSWITCH WITH LEVER
10	VIT0000007	SCREW HEAD TAP CAP M3X20
11	VIT0004701	NUT M3
12	Z0250008126	PIN M4
13	VIT0005521	SCREW HEX HEAD REC TAP M4X25
14	VIT0003103	SPRING WASHER 4,3
15	VIT0003301	WASHER 4,3X12X1,5
16	Z0250008043	MICRO GROUP READER DISK
17	VIT0000013	SCREW HEAD TAP CAP M4X12
18	Z0250008012	MOTOR CRANK
19	Z0250008034	HOOKING LEVER
20	Z0250008059	SPRING
21	VIT0005205	DOWEL PIN 4X40
22	VIT0005508	SCREW HEX HEAD REC TAP M4X12
23	VIT0003003	WASHER 4,3X8X0,8
100	Z0260010129CL	§ MOTOR SUPPORT

www.rheavendors.com tel: 0039 02 966 551 fax: 0039 02 96 55 086 email: rheavendors@rheavendors.com exclusive property of rheavendors group

ESPRESSO boiler support with manometer

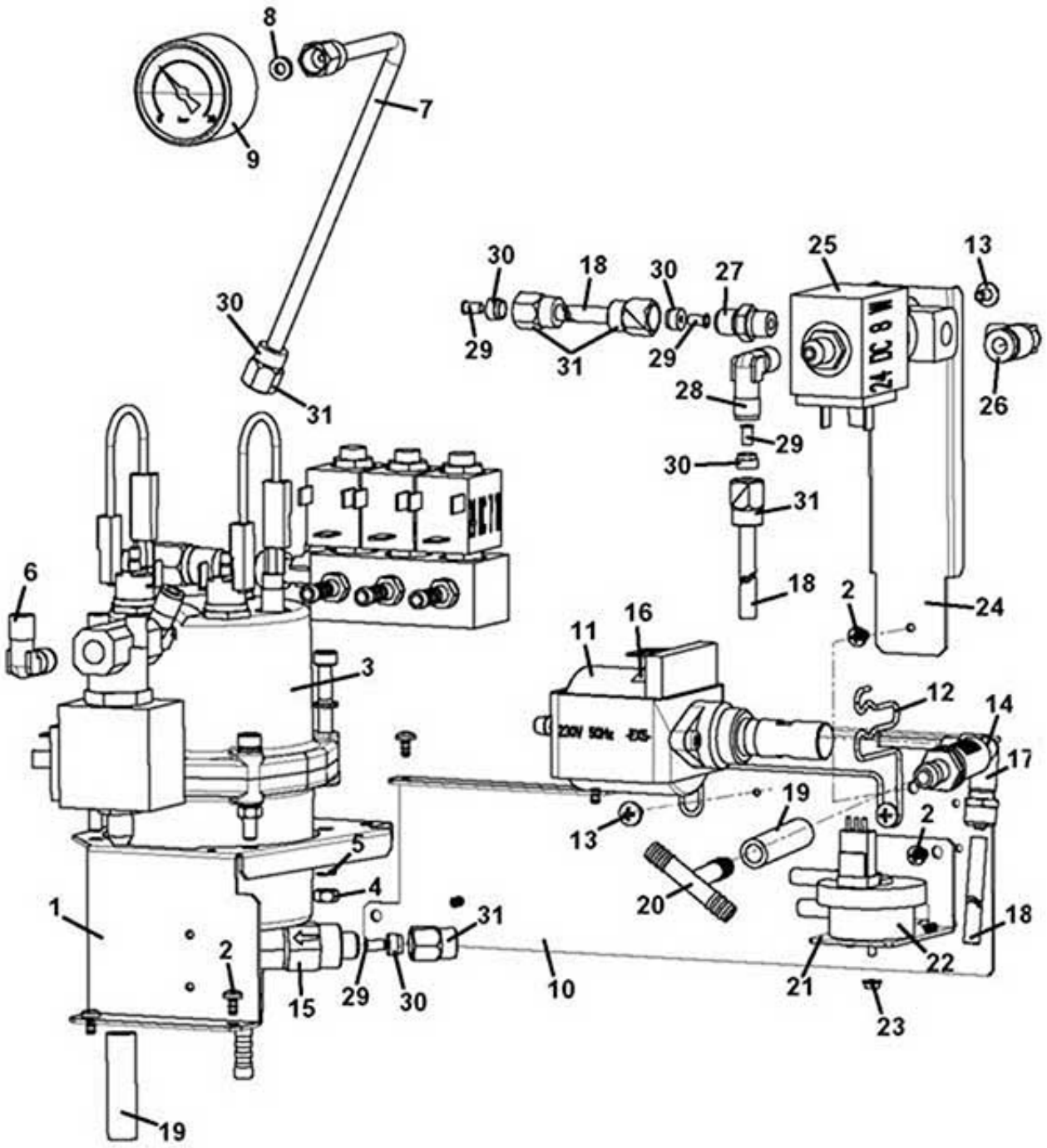

www.rheavendors.com tel: 0039 02 966 551 fax: 0039 02 96 55 086 email: rheavendors@rheavendors.com exclusive property of rheavendors group

ESPRESSO boiler support with manometer		
Pos.	**Code**	**Description**
1	Z0070016241	INOX BOILER SUPPORT
2	VIT0002009	SCREW ST HEAD CAP M3.5X6.5
3		See table micro group boiler with manometer
4	VIT0004504	NUT M5
5	VIT0003406	SPRING WASHER 5,3
6	Z0100001019	ELBOW CONNECTOR SO2400-6-1/8
7	TCU0000002	COPPER PIPE 6X4
8	Z0100003002	COPPER GASKET SO5-5-1/8
9	Z0110006003	MANOMETER
10	Z0070016221	PUMP SUPPORT
11	Z0110004041	PUMP EX5 230V-50HZ
12	Z0110004038	PUMP SUPPORT
13	VIT0002401	SCREW ST HEAD CAP M3.5X9.5
14	Z0100001085	ELBOW CONNECTOR
15	Z0110002012R	§ SAFETY VALVE E:1/8M O:1/8F
16	ELE0000915	PUMP THERMOPROTECTOR
17	Z0110004070	BY PASS VALVE 11 BAR
18	TTEF04/06T	PTFE PIPE 4X6
19/a	TSIL07/11T-10	SILICON HOSE 7X11 MT.10
19/b	TSIL07/11T-50	SILICON HOSE 7X11 MT.50
20	Z0100003022	T CONNECTOR 461 TS UL
21	Z0070016224	VOLUMETRIC COUNTER SUPPORT
22	Z0110007003	VOLUMETRIC COUNTER
23	VIT0004701	NUT M3
24	Z0070015139	VALVE SUPPORT
25	Z0110001072	VALVE 3W 1/8 24DC O
26	Z0100001056	ELBOW 804 6-1/8 OR VITON
27	Z0100001017	STRAIGHT CONNECT SO1100-6-1/8
28	Z0100001025	ELBOW SO2600-6-1/8
29	Z0100002005	NUT D.4
30	Z0100002002	LOCKING RING SO1-6
31	Z0100001002	CONNECTOR NUT

www.rheavendors.com tel: 0039 02 966 551 fax: 0039 02 96 55 086 email: rheavendors@rheavendors.com exclusive property of rheavendors group

ESPRESSO boiler support without manometer

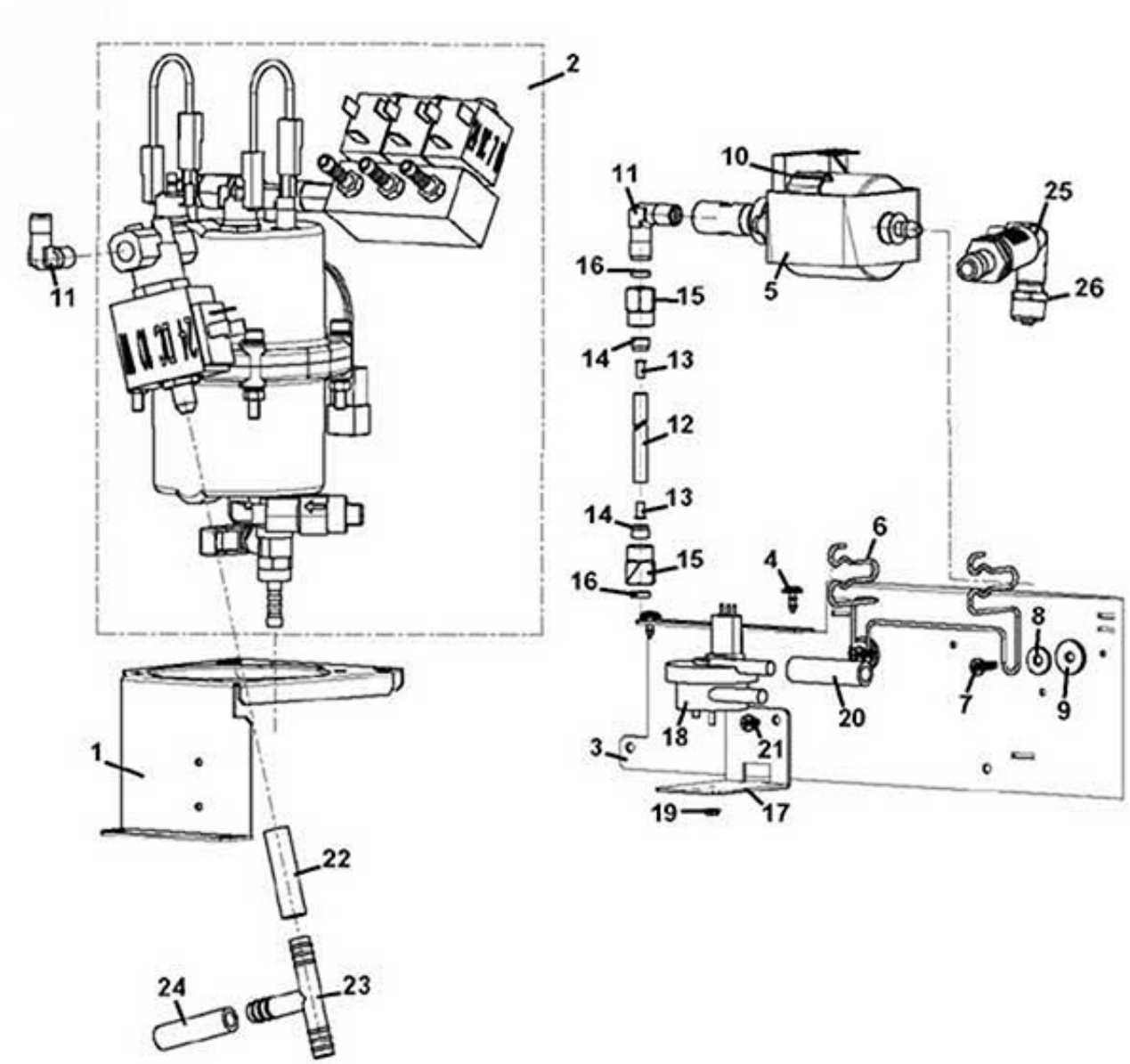

www.rheavendors.com tel: 0039 02 966 551 fax: 0039 02 96 55 086 email: rheavendors@rheavendors.com exclusive property of rheavendors group

ESPRESSO boiler support without manometer		
Pos.	**Code**	**Description**
1	Z0070016241	INOX BOILER SUPPORT
2		See table micro group boiler without manometer
3	Z0070016221	PUMP SUPPORT
4	VIT0002401	SCREW ST HEAD CAP M3.5X9.5
5	Z0110004041	PUMP EX5 230V-50HZ
6	Z0110004038	PUMP SUPPORT
7	VIT0002004	SCREW ST HEAD CAP M3.5X13
8	VIT0003301	WASHER 4,3X12X1,5
9	1600001098	RUBBER SPACER D. 4,5
10	ELE0000915	PUMP THERMOPROTECTOR
11	Z0100001019	ELBOW CONNECTOR SO2400-6-1/8
12	TTEF04/06T	PTFE PIPE 4X6
13	Z0100002005	NUT D.4
14	Z0100002002	LOCKING RING SO1-6
15	Z0100001002	CONNECTOR NUT
16	Z0100003002	COPPER GASKET SO5-5-1/8
17	Z0070016224	VOLUMETRIC COUNTER SUPPORT
18	Z0110007003	VOLUMETRIC COUNTER
19	VIT0004701	NUT M3
20/a	TSIL05/08T-10	SILICON HOSE 5X8 MT.10
20/b	TSIL05/08T-50	SILICON HOSE 5X8 MT.50
21	VIT0002009	SCREW ST HEAD CAP M3.5X6.5
22/a	TSIL07/11T-10	SILICON HOSE 7X11 MT.10
22/b	TSIL07/11T-50	SILICON HOSE 7X11 MT.50
23	Z0100003022	T CONNECTOR 461 TS UL
24/a	TSIL07/11T-10	SILICON HOSE 7X11 MT.10
24/b	TSIL07/11T-50	SILICON HOSE 7X11 MT.50
25	Z0110004070	BY PASS VALVE 11 BAR
26	Z0100001007	STRAIGHT CONNECT SO30-1/8-1/8

www.rheavendors.com tel: 0039 02 966 551 fax: 0039 02 96 55 086 email: rheavendors@rheavendors.com exclusive property of rheavendors group

micro group boiler with manometer

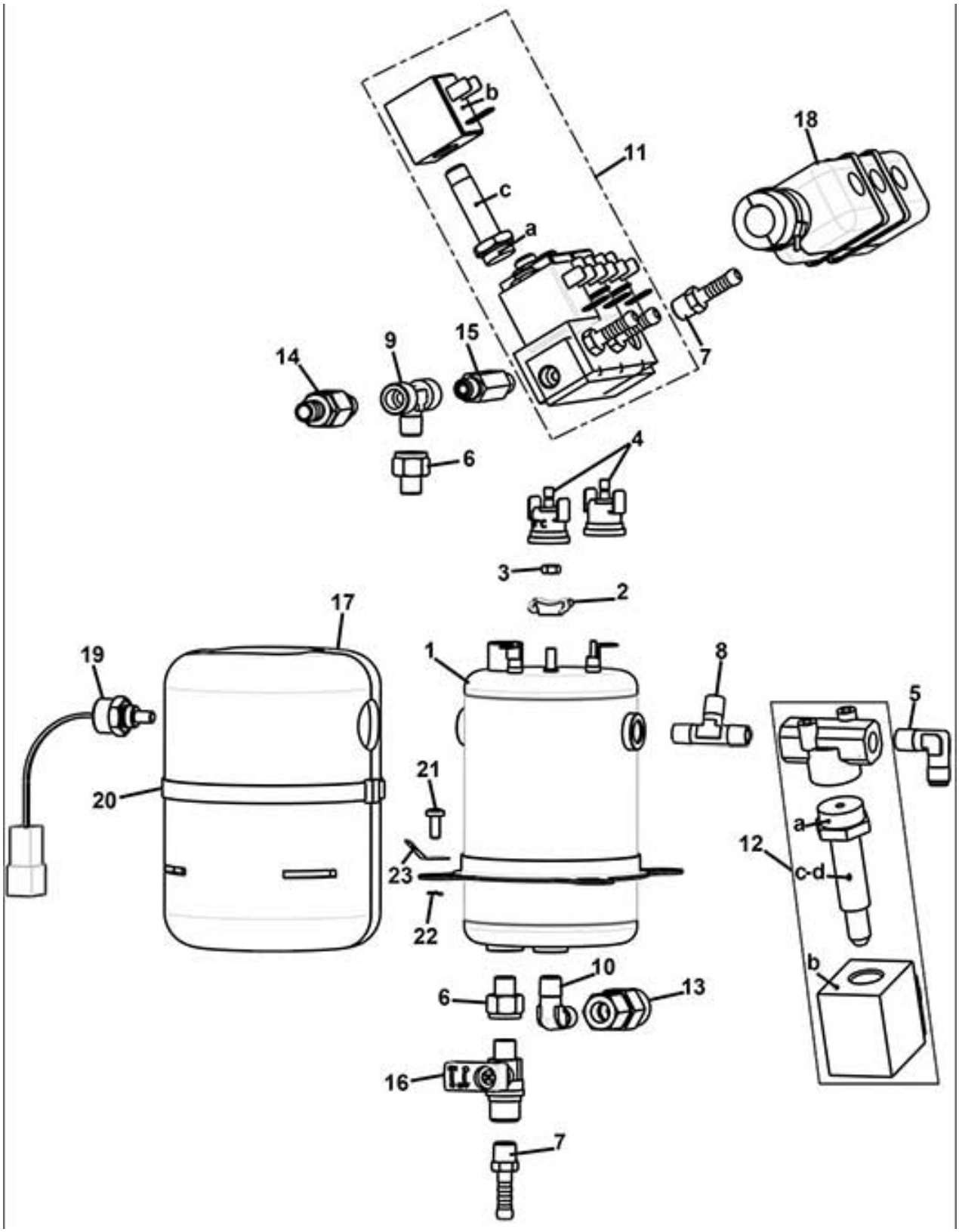

www.rheavendors.com tel: 0039 02 966 551 fax: 0039 02 96 55 086 email: rheavendors@rheavendors.com exclusive property of rheavendors group

micro group boiler with manometer		
Pos.	**Code**	**Description**
1	Z0600019701CL	§ BOILER 1500 W 230V 400 CC Pos.1+4 from serial 20180400000
2	Z0600019188	THERMOSTAT CLIP
3	VIT0004826	NUT M4X0,7
4	ELE0000982	CLIXSON 127°
5	Z0100001019	ELBOW CONNECTOR SO2400-6-1/8
6	Z0100001067	CONNECTOR SO40-1/8-1/8
7	Z0100001082	RUBBER HOLDER D.7-GC 1/8
8	Z0100001206	T CONNECTOR M-M-M 1/8" GC
9	Z0100001087	T CONNECTOR 1/8
10	Z0100001110	ELBOW CONNECTOR 6-1/8
11_1	Z0110001117	VALVE BLOCK 3V 2W 24V DC 7W
11_1/a	Z0110010138	SLEEVE D.13,9+WHITE OR
11_1/a	Z0110010148	SLEEVE D.14,9+GREEN OR
11_1/b	Z0110010135	COIL 7W 24V DC
11_1/c	Z0110010136	CORE+SPRING
11_2	Z0110001117	VALVE BLOCK 3V 2W 24V DC 7W
11_2/a		COMPONENT NO MORE SOLD
11_2/b	Z0110010145	COIL 6W 24V DC 70%
11_2/c		PARTS NO MORE AVAILABLE
12_1	Z0110001072	VALVE 3W 1/8 24DC O
12_1/a		
12_1/b	Z0110010065	COIL 8 W 24 DC
12_1/c		COMPONENT NO MORE SELLING
13	Z0110002012R	§ SAFETY VALVE E:1/8M O:1/8F
14	Z0110002013	SAFETY VALVE 1/8M D.9
15	Z0110001220	STRAIGHT CONNECTOR MM 1/8 GC
16	Z0600019017	TAP M/F 1/8
17	Z0600019195	INSULATION SHELL
18	Z0600019196	EV HOUSING INSULATION
19	ELE0000975	PROBE
20	FASC000214	PLASTIC CLIP BLACK 7,8X365
100	KITCAF0091	UPGRADE KIT BOILER STAINLESS S Completed with the new support Up to serial 20180399999
101	Z0600019793CL	§ PRES S.STEEL BOILER 400CC From pos. 1 to pos. 31 from serial 20180400000

www.rheavendors.com tel: 0039 02 966 551 fax: 0039 02 96 55 086 email: rheavendors@rheavendors.com exclusive property of rheavendors group

micro group boiler without manometer

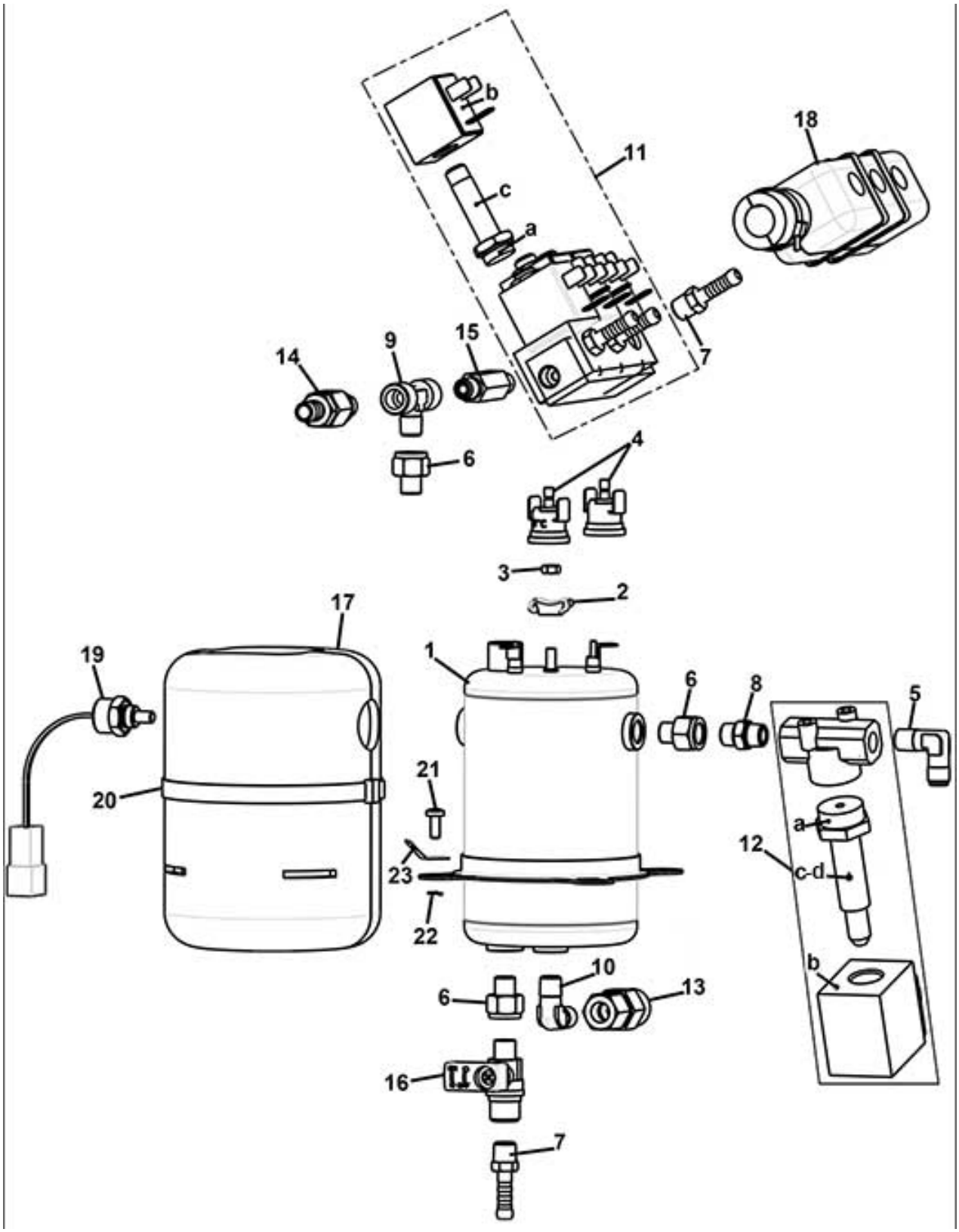

www.rheavendors.com tel: 0039 02 966 551 fax: 0039 02 96 55 086 email: rheavendors@rheavendors.com exclusive property of rheavendors group

micro group boiler without manometer		
Pos.	**Code**	**Description**
1	Z0600019701CL	§ BOILER 1500 W 230V 400 CC Pos.1+4 from serial 20180400000
2	Z0600019188	THERMOSTAT CLIP
3	VIT0004826	NUT M4X0,7
4	ELE0000982	CLIXSON 127°
5	Z0100001019	ELBOW CONNECTOR SO2400-6-1/8
6	Z0100001067	CONNECTOR SO40-1/8-1/8
7	Z0100001082	RUBBER HOLDER D.7-GC 1/8
8	Z0100001084	NIPPLE 1/8
9	Z0100001087	T CONNECTOR 1/8
10	Z0100001110	ELBOW CONNECTOR 6-1/8
11_1	Z0110001117	VALVE BLOCK 3V 2W 24V DC 7W
11_1/a	Z0110010138	SLEEVE D.13,9+WHITE OR
11_1/a	Z0110010148	SLEEVE D.14,9+GREEN OR
11_1/b	Z0110010135	COIL 7W 24V DC
11_1/c	Z0110010136	CORE+SPRING
11_2	Z0110001117	VALVE BLOCK 3V 2W 24V DC 7W
11_2/a		COMPONENT NO MORE SOLD
11_2/b	Z0110010145	COIL 6W 24V DC 70%
11_2/c		PARTS NO MORE AVAILABLE
12_1	Z0110001072	VALVE 3W 1/8 24DC O
12_1/a		
12_1/b	Z0110010065	COIL 8 W 24 DC
12_1/c		COMPONENT NO MORE SELLING
13	Z0110002012R	§ SAFETY VALVE E:1/8M O:1/8F
14	Z0110002013	SAFETY VALVE 1/8M D.9
15	Z0110001220	STRAIGHT CONNECTOR MM 1/8 GC
16	Z0600019017	TAP M/F 1/8
17	Z0600019195	INSULATION SHELL
18	Z0600019196	EV HOUSING INSULATION
19	ELE0000975	PROBE
20	FASC000214	PLASTIC CLIP BLACK 7,8X365
100	KITCAF0090	UPGRADE KIT BOILER STAINLESS S Completed with the new support Up to serial 20180399999
101	Z0600019791CL1	§ PRES S.STEEL BOILER 400CC From Pos. 1 to Pos. 20 from serial 20180400000

www.rheavendors.com tel: 0039 02 966 551 fax: 0039 02 96 55 086 email: rheavendors@rheavendors.com exclusive property of rheavendors group

distribution pipes movement

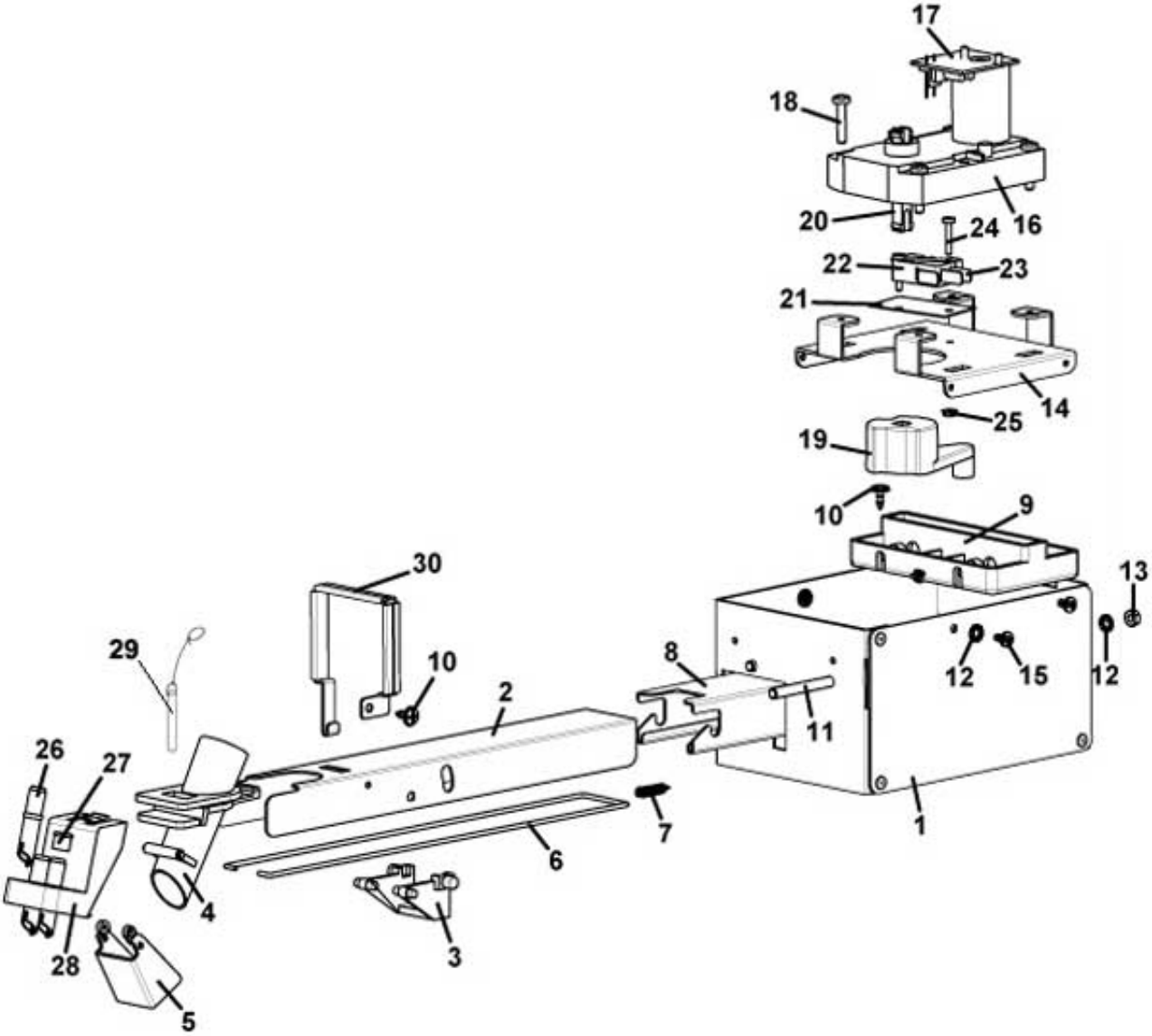

www.rheavendors.com tel: 0039 02 966 551 fax: 0039 02 96 55 086 email: rheavendors@rheavendors.com exclusive property of rheavendors group

distribution pipes movement		
Pos.	**Code**	**Description**
1	Z0380010805	PIPE MOVEMENT HOUSING
2	Z0380010815	NOZZLE HOLDER
3	Z0380010599	NOZZLE MOVEMENT BUTTON
4	Z0380011229NA	SUGAR CHUTE
5	Z0380010424NA	SUGAR SPLITTER
6	Z0380010813	BRACKET
7	Z0380010431	SPRING
8	Z0380010683	PIPE SUPPORT GUIDE
9	Z0380010692	PIPE SUPPORT GUIDE
10	VIT0002401	SCREW ST HEAD CAP M3.5X9.5
11	Z0380010808	SHAFT
12	VIT0003103	SPRING WASHER 4,3
13	VIT0004503	NUT M4
14	Z0380010693	GEAR MOTOR SUPPORT
15	VIT0002009	SCREW ST HEAD CAP M3.5X6.5
16	Z0090002114R1	§ GEARBOX MOTOR 11RPM 24V DC
17	SCH0003740	MOTOR FILTER
18	VIT0000035	SCREW HEAD TAP CAP M4X20
19	Z0380010694	NOZZLE MOVEMENT CAM
20	Z0380010421	GEARBOX MOTOR SHAFT
21	7500902054	ISOLATION
22	ELE0001528	MICROSWITCH
23	ELE0001906	MICROSWITCH LEVER
24	VIT0000006	SCREW HEAD TAP CAP M3X16
25	VIT0004701	NUT M3
26	Z0380010657NA	ESPRESSO NOZZLE D. 5,7
27	Z0380010656NA	PLUG BLACK
28	Z0380010655NA/L	NOZZLES HOLDER
29	Z0380010429CL	§ FIXING PLATE PIN
30	Z0380010881	CLAMP
100	Z0380010801R	§ NOZZLE MOVEMENT From pos.1 to pos. 25

www.rheavendors.com tel: 0039 02 966 551 fax: 0039 02 96 55 086 email: rheavendors@rheavendors.com exclusive property of rheavendors group

plastic batcher with setting

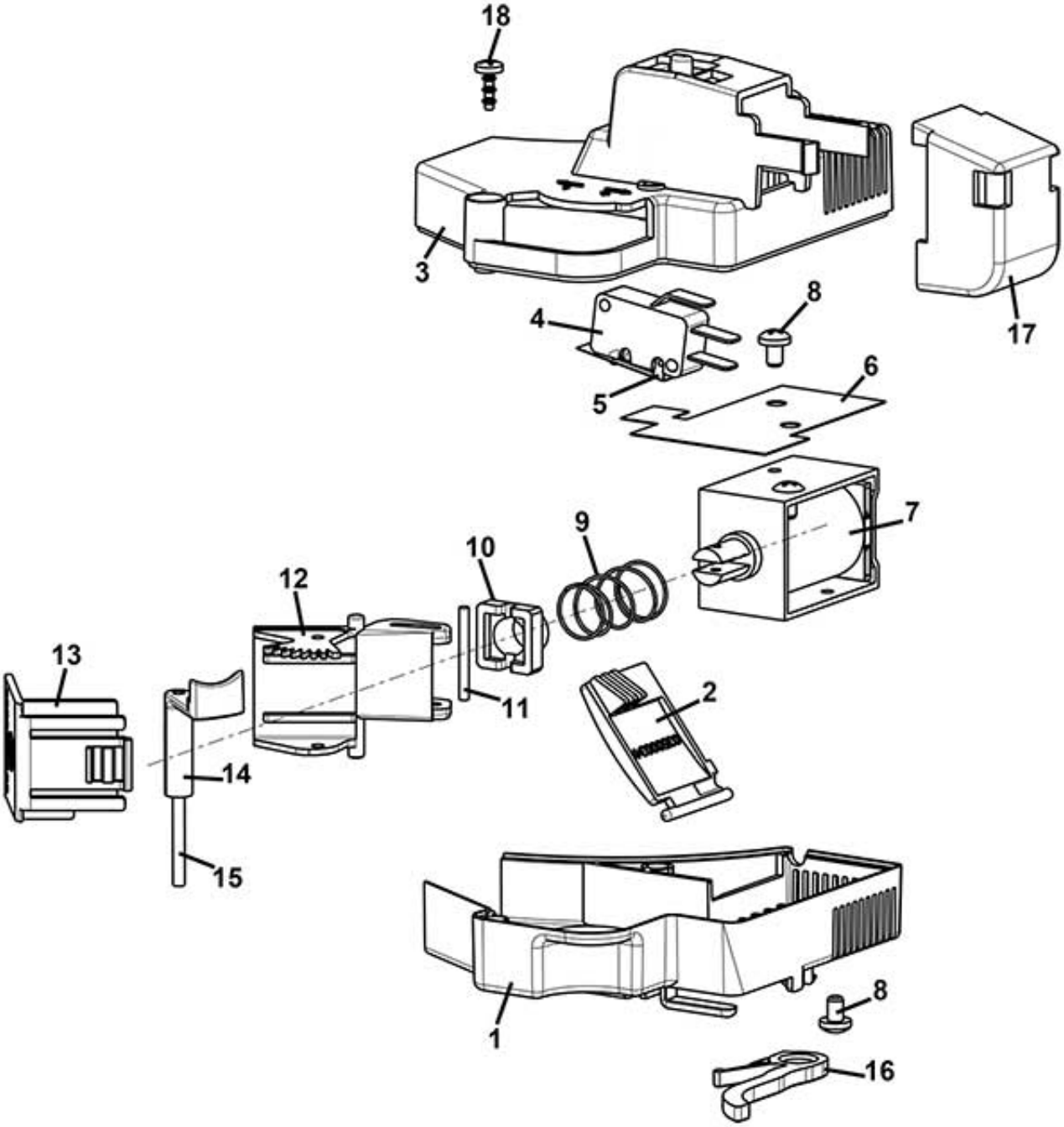

www.rheavendors.com tel: 0039 02 966 551 fax: 0039 02 96 55 086 email: rheavendors@rheavendors.com exclusive property of rheavendors group

plastic batcher with setting		
Pos.	**Code**	**Description**
1	Z0350003406AHR	LOWER+UPPER COVER RAL9003 Pos.1+3
2	Z0350003411AH	TAB RAL9003
3	Z0350003406AHR	LOWER+UPPER COVER RAL9003 Pos.1+3
4	ELE0001522	MICROSWITCH
5	ELE0001906	MICROSWITCH LEVER
6	Z0350003419	MICRO COVER
7	ELE0000063	ELECTROMAGNET 8% 24V DC
8	VIT0000021	SCREW HEAD TAP CAP M4X6
9	Z0350003412	DOSER SPRING
10	Z0350003417AH	SPRING FLANGE RAL9003
11	VIT0005212	DOWEL PIN 2.5X24
12	Z0350003408AH	FLAP RAL9003
13	Z0350003409AH	REGULATION RAL9003
14	Z0350003414AH	REGULATION LEVER RAL9003
15	VIT0005219	DOWEL PIN 3X30
16	Z0350003416AH	BATCHER LEVER RAL9003
17	Z0350003415AH	CABLES COVER RAL9003
18	VIT0002469	SCREW HEAD TAP M3.5X10
100	Z0350003400CL	§ BATCHER 24V DC

www.rheavendors.com tel: 0039 02 966 551 fax: 0039 02 96 55 086 email: rheavendors@rheavendors.com exclusive property of rheavendors group

vertical mill groups

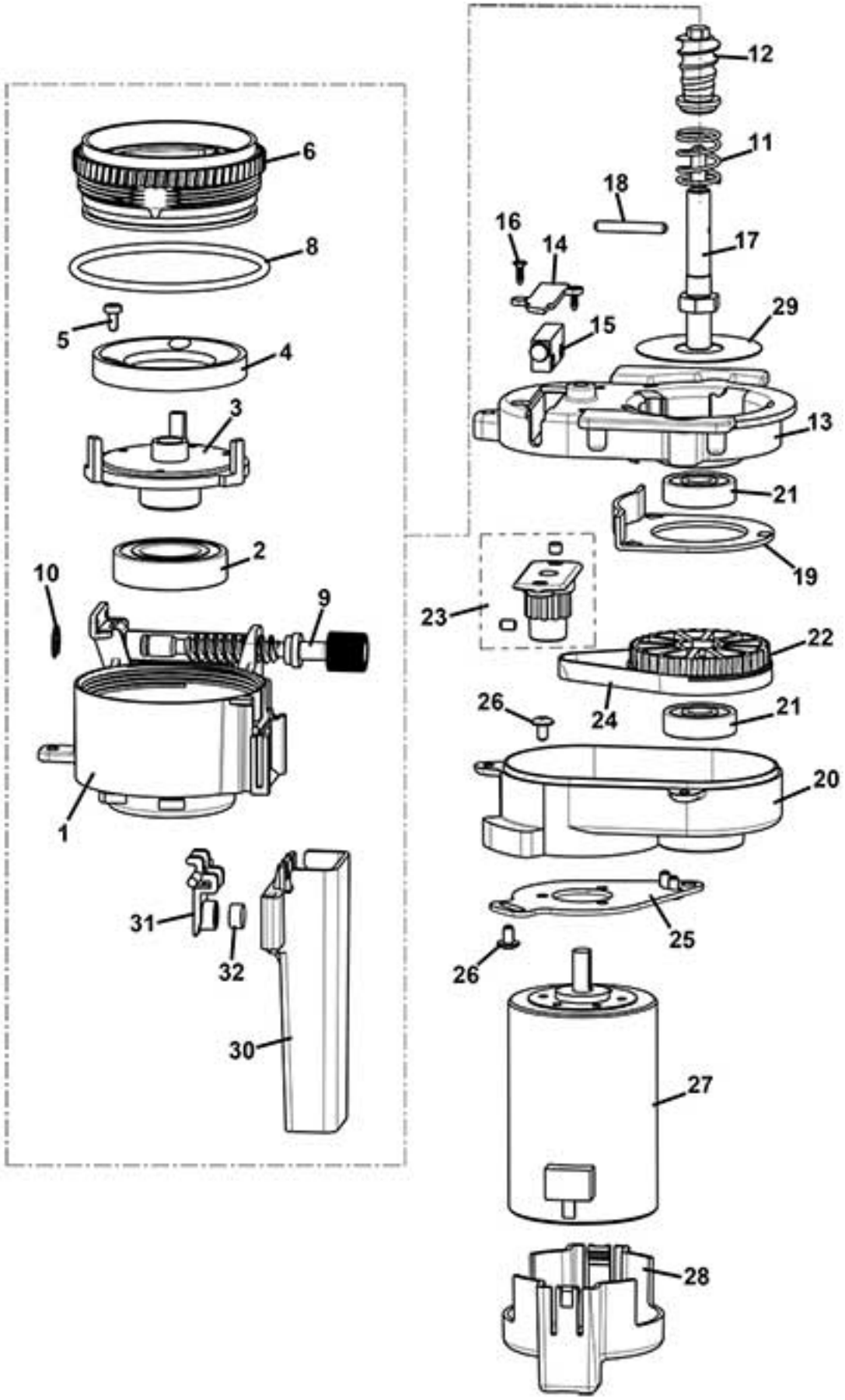

www.rheavendors.com tel: 0039 02 966 551 fax: 0039 02 96 55 086 email: rheavendors@rheavendors.com exclusive property of rheavendors group

vertical mill groups		
Pos.	**Code**	**Description**
1	Z0320001525AH	MILLSTONES SUPPORT RAL9003
2	VIT0009315	BEARING
3	Z0320001536	LOWER GRINDER SUPPORT
4	Z0320001559	GRINDER RING D.63.4 20/56
5	VIT0000024	SCREW HEAD FLAP CAP M4X8
6	Z0320001515AH	TOOTHED RING NUT RAL9003
8	GUA0000123	OR 3231 SILCON
9	Z0320001514AH	REGULATION SCREW RAL9003
10	VIT0006506	RING 7
11	Z0320001558	SPRING
12	Z0320001538	GRINDER BODY BLOCK
13	Z0320001513AH	UPPER BATCHER BOX RAL9003
14	Z0320001521AH	SENSOR COVER RAL9003
15	ELT0030671	MAGNETIC SENSOR
16	VIT0002107	SCREW COUNT FLAT HEAD M2.9X6.5
17	Z0320001512	TRANSMISSION SHAFT
18	VIT0005101	PIN 3X16
19	Z0320001524AH	COVER RAL9003
20	Z0320001506AH	LOWER BATCHER BOX RAL9003
21	VIT0009314	BEARING
22	Z0320001531AH	PULLEY RAL9003
23/a	Z0320001537CLR	§ PULLEY+MAGNET Buy if the pos.13 have the lateral hollow lower than 1cm
23/b	Z0320001537CLR1	§ PULLEY+MAGNET Buy if the pos.13 have the lateral hollow upper than 1cm
24	Z0090006006	TOOTHED BELT
25	Z0320001522	MOTOR SUPPORT FLANGE
26	VIT0000030	SCREW HEAD TAP CAP M4X7
27	Z0090003045	GRINDER MOTOR 220V DC
28	Z0320001519AH	GRINDER SENSOR COVER RAL9003
29	Z0320001555	SPACER
30	Z0250010291IC	GROUNDS CHUTE RAL2011-LONG
31	Z0250010292IC	COUNTERWEIGHT SUPPORT RAL2011
32	Z0250010303	COFFEE CHUTE WEIGHT
100	Z0320001508CL	§ GRINDER From pos. 1 to pos. 29 excluded pos. 15+23/a and 23/b
101	Z0320001509CL	§ GRINDER W/SENSOR From pos.1 to pos. 29

www.rheavendors.com tel: 0039 02 966 551 fax: 0039 02 96 55 086 email: rheavendors@rheavendors.com exclusive property of rheavendors group

micro coffee group

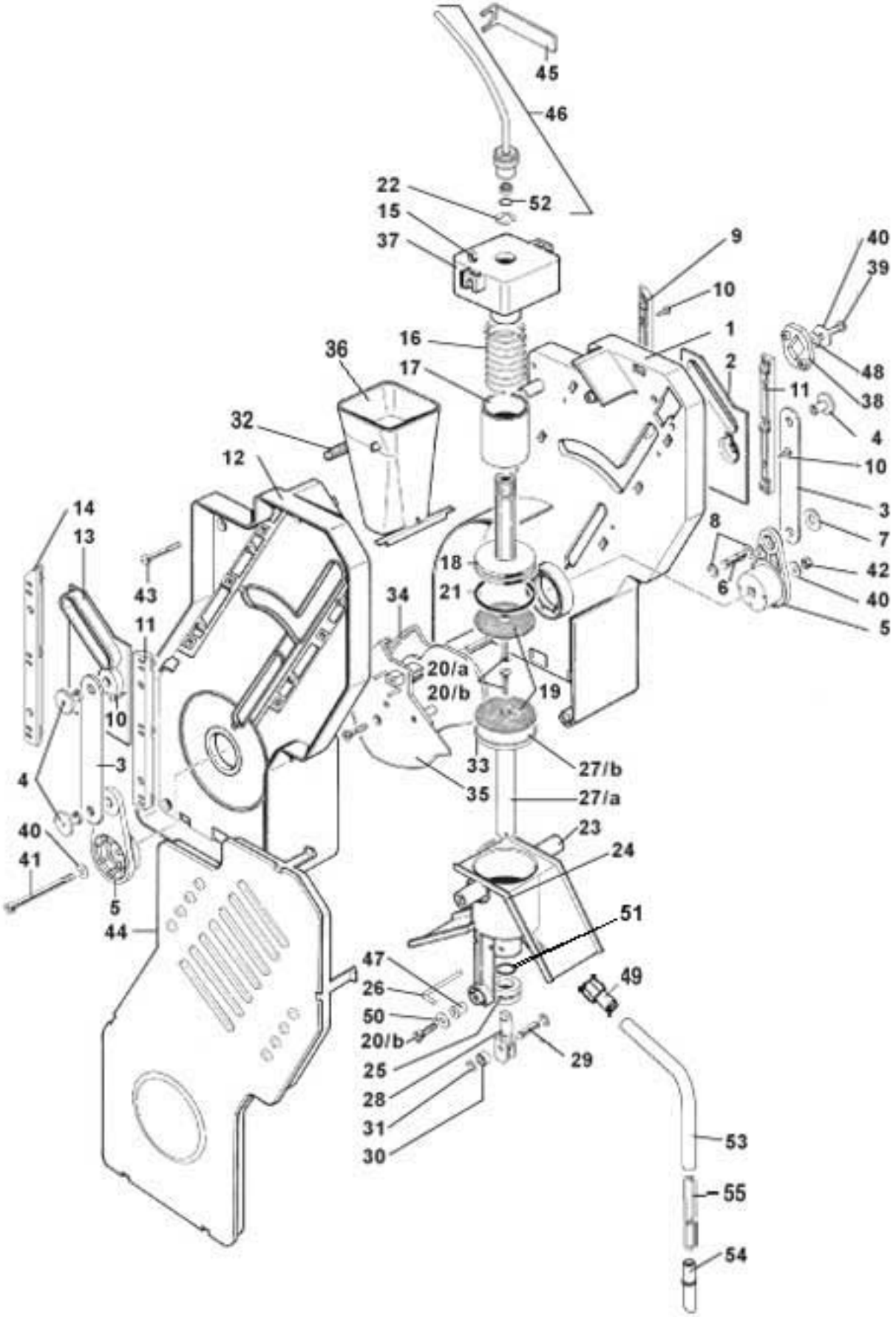

www.rheavendors.com tel: 0039 02 966 551 fax: 0039 02 96 55 086 email: rheavendors@rheavendors.com exclusive property of rheavendors group

micro coffee group		
Pos.	**Code**	**Description**
1	Z0250008005R	§ MICRO BREWER COVERS-L.H+R.H
2	Z0250008084	INFUSION CHAMBER CAM-RIGHT
3	Z0250008009	CONNECTING ROD
4	Z0250008028	CONNECTING ROD PIN
5	Z0250008011	RIGHT CRANK
6	Z0250008014	PIN
7	Z0250008042	ANTIVIBRATION WASHER
8	VIT0006515	RING 5
9	Z0250008031	REAR RIGHT GUIDE
10	VIT0002026	SCREW ST HEAD CAP M3.5X6.5
11	Z0250008033	FRONTAL GUIDE
12	Z0250008129R	§ MICRO BREWER COVERS-L.H+R.H
13	Z0250008085	INFUSION CHAMBER CAM-LEFT
14	Z0250008032	REAR LEFT GUIDE
15	Z0250008086	UPPER FILTER SUPPORT
16	Z0250008024	UPPER FILTER SPRING
17	Z0250008087	SPRING COVER PIPE
18	Z0250008026R	§ UPPER COFFEE FILTER D 36 For Coffee beans group D. 36 (From pos.18 to pos.21)
19	Z0250008099	COFFEE FILTER 33,4
20/a	VIT0001202	SCREW COUNT FLAT HEAD M3X14
20/b	VIT0000121	SCREW COUNT FLAT HEAD M3X8
21	GUA0000080	OR 4112 RED SILICONE LSR70
22	VIT0006513	RING 8
23	Z0250008046R	§ BREWER INFUSION CHAMBER
24	GUA0000065	OR 112 SILICON
25	Z0250008053	LOWER INLET CUP BUSH
26	Z0250008029	FUNNEL PIN
27/a	Z0250008108	LOWER FILTER SHAFT
27/b	Z0250008122	COFFEE FILTER LOW 36
28	Z0250008106	BEARING SUPPORT
29	Z0250008021	BEARING SHAFT
30	Z0250008022	BEARING
31	VIT0006517	RING 3.2
32	Z0250008119	SPRING
33	Z0250008083	CAM
34	Z0250008016	CAM RIGHT
35	Z0250008017	CAM LEFT
36	Z0250008036	COFFEE FUNNEL
37	VIT0004803	NUT M4
38	Z0250008035	SETTING PLATE
39	VIT0000032	SCREW HEAD TAP CAP M4X8
40	VIT0003309	WASHER4,3X16X1,5
41	VIT0005523	SCREW HEX HEAD REC TAP M4X60
42	VIT0004810	NUT M4
43	VIT0002461	SCREW HEAD TAP M4.2X26
44	Z0250008039CM	MICRO BREWER COVER-L.H RAL9006
45	Z0250008048	KEY FOR NUT

www.rheavendors.com tel: 0039 02 966 551 fax: 0039 02 96 55 086 email: rheavendors@rheavendors.com exclusive property of rheavendors group

micro coffee group		
46	Z0250008192CL	§ WATER INLET PIPE
47	VIT0009203	INSERT
48	VIT0003451	SPRING WASHER 4,2
49/a	Z0250008128	STRAIGHT CONNECTOR
49/b	Z0250008132	STRAIGHT CONNECTOR
50	Z0250008088	WASHER
51	GUA0000065	OR 112 SILICON
52	GUA0000061	OR 2010 VITON 80 BLACK
53/a	TSIL06/09T	SILICON HOSE 6X9 For pos. 49/a
53/b	TSIL04/06T	SILICON HOSE 4X6 For pos. 49/b
54	Z0380010657NA	ESPRESSO NOZZLE D. 5,7
55	TTEF04/06T	PTFE PIPE 4X6
100	Z0250008231R2	COFFEE BREWER MICRO D.36-INV.
102	Z0250008109R	§ LOW.COFFEE FILTER D.36+BEAR.
103	Z0250008107R	BEARING SUPPORT
104	Z0250008108R	§ LOWER COFFEE FILTER D.36
106	Z0250008132R	§ COFFEE OUTLET PIPE (Pos.49/b+53+54+55)
107	Z0250008128R	§ COFFEE OUTLET PIPE (Pos.49/b+53+54)

www.rheavendors.com tel: 0039 02 966 551 fax: 0039 02 96 55 086 email: rheavendors@rheavendors.com exclusive property of rheavendors group

heated micro coffee group

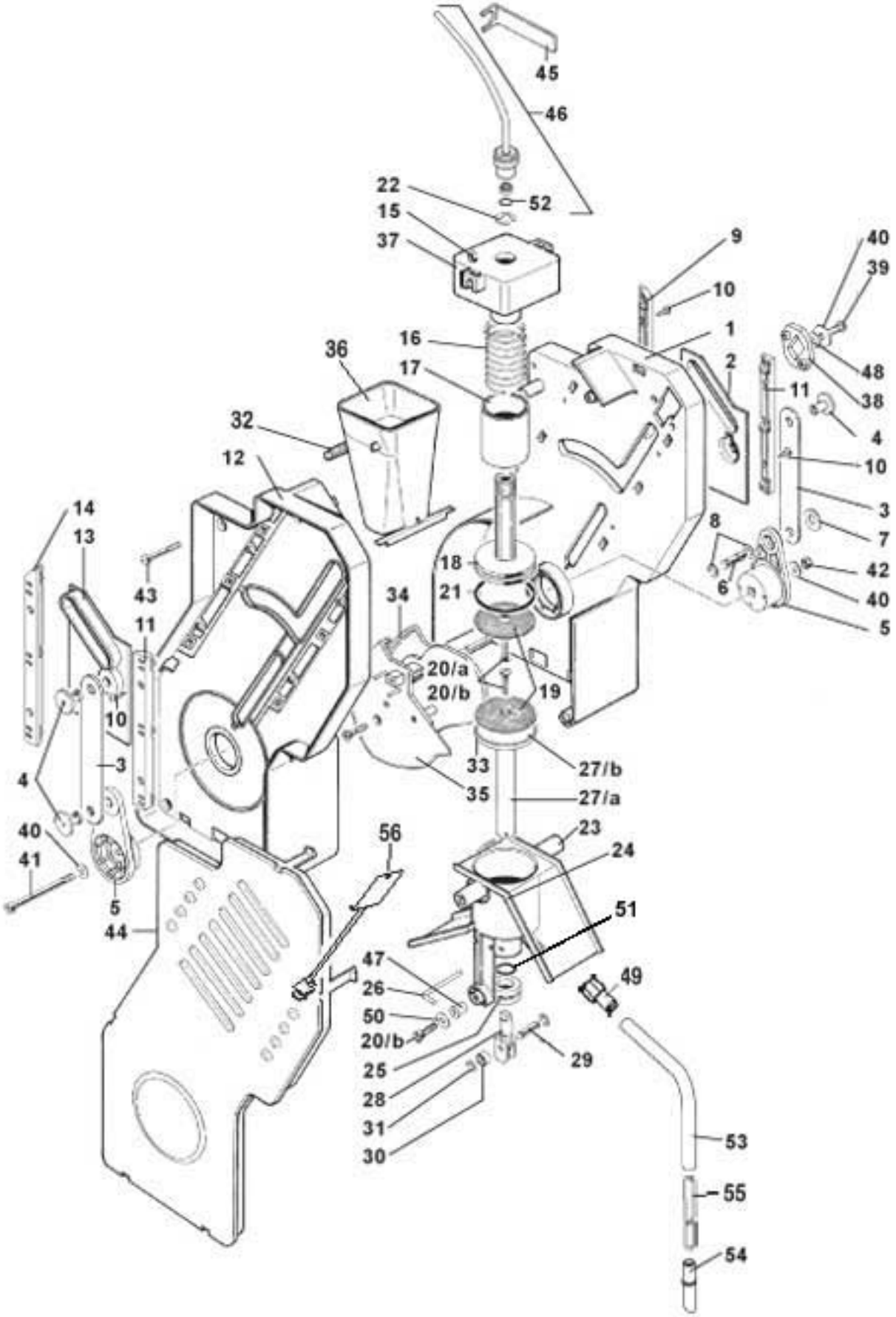

www.rheavendors.com tel: 0039 02 966 551 fax: 0039 02 96 55 086 email: rheavendors@rheavendors.com exclusive property of rheavendors group

heated micro coffee group		
Pos.	**Code**	**Description**
1	Z0250008005R	§ MICRO BREWER COVERS-L.H+R.H
2	Z0250008084	INFUSION CHAMBER CAM-RIGHT
3	Z0250008009	CONNECTING ROD
4	Z0250008028	CONNECTING ROD PIN
5	Z0250008011	RIGHT CRANK
6	Z0250008014	PIN
7	Z0250008042	ANTIVIBRATION WASHER
8	VIT0006515	RING 5
9	Z0250008031	REAR RIGHT GUIDE
10	VIT0002026	SCREW ST HEAD CAP M3.5X6.5
11	Z0250008033	FRONTAL GUIDE
12	Z0250008005R	§ MICRO BREWER COVERS-L.H+R.H
13	Z0250008085	INFUSION CHAMBER CAM-LEFT
14	Z0250008032	REAR LEFT GUIDE
15	Z0250008086	UPPER FILTER SUPPORT
16	Z0250008024	UPPER FILTER SPRING
17	Z0250008087	SPRING COVER PIPE
18	Z0250008226R	§ UPPER COFFEE FILTER D.36 For Coffee beans group D. 36 (From pos.18 to pos.21)
19	Z0250008019	COFFEE FILTER
20	VIT0000121	SCREW COUNT FLAT HEAD M3X8
21	GUA0000080	OR 4112 RED SILICONE LSR70
22	VIT0006513	RING 8
23	Z0250008215R1	BREWER CHAMBER
24	GUA0000065	OR 112 SILICON
25	Z0250008053	LOWER INLET CUP BUSH
26	Z0250008029	FUNNEL PIN
27/a	Z0250008108	LOWER FILTER SHAFT
27/b	Z0250008122	COFFEE FILTER LOW 36
28	Z0250008226	BEARING SUPPORT
29	Z0250008021	BEARING SHAFT
30	Z0250008022	BEARING
31	VIT0006517	RING 3.2
32	Z0250008119	SPRING
33	Z0250008083	CAM
34	Z0250008016	CAM RIGHT
35	Z0250008017	CAM LEFT
36	Z0250008036	COFFEE FUNNEL
37	VIT0004803	NUT M4
38	Z0250008035	SETTING PLATE
39	VIT0000032	SCREW HEAD TAP CAP M4X8
40	VIT0003309	WASHER4,3X16X1,5
41	VIT0005523	SCREW HEX HEAD REC TAP M4X60
42	VIT0004810	NUT M4
43	VIT0002461	SCREW HEAD TAP M4.2X26
44	Z0250008039CM	MICRO BREWER COVER-L.H RAL9006
45	Z0250008048	KEY FOR NUT
46	Z0250008192CL	§ WATER INLET PIPE

www.rheavendors.com tel: 0039 02 966 551 fax: 0039 02 96 55 086 email: rheavendors@rheavendors.com exclusive property of rheavendors group

heated micro coffee group		
47	Z0250008119	SPRING
48	VIT0003451	SPRING WASHER 4,2
49/a	Z0250008128	STRAIGHT CONNECTOR
49/b	Z0250008132	STRAIGHT CONNECTOR
51	GUA0000065	OR 112 SILICON
52	GUA0000061	OR 2010 VITON 80 BLACK
53/a	TSIL06/09T	SILICON HOSE 6X9 For pos. 49/a
53/b	TSIL04/06T	SILICON HOSE 4X6 For pos. 49/b
54	Z0380010657NA	ESPRESSO NOZZLE D. 5,7
55	TTEF04/06T	PTFE PIPE 4X6
56	Z0250008213R	§ HEATING ELEMENT
100	Z0250008220R	COFFEE BREWER MICRO D.36 Excluded pos. 45-46-49-52-53-54-55-56
101	Z0250008227R	§ BERING SUPPORT
102	Z0250008132R	§ COFFEE OUTLET PIPE (Pos.49/b+53+54+55)
103	Z0250008128R	§ COFFEE OUTLET PIPE (Pos.49/b+53+54)
104	Z0250008228R	§ LOW.COFFEE FILTER D.36+BEAR.

www.rheavendors.com tel: 0039 02 966 551 fax: 0039 02 96 55 086 email: rheavendors@rheavendors.com exclusive property of rheavendors group

product containers

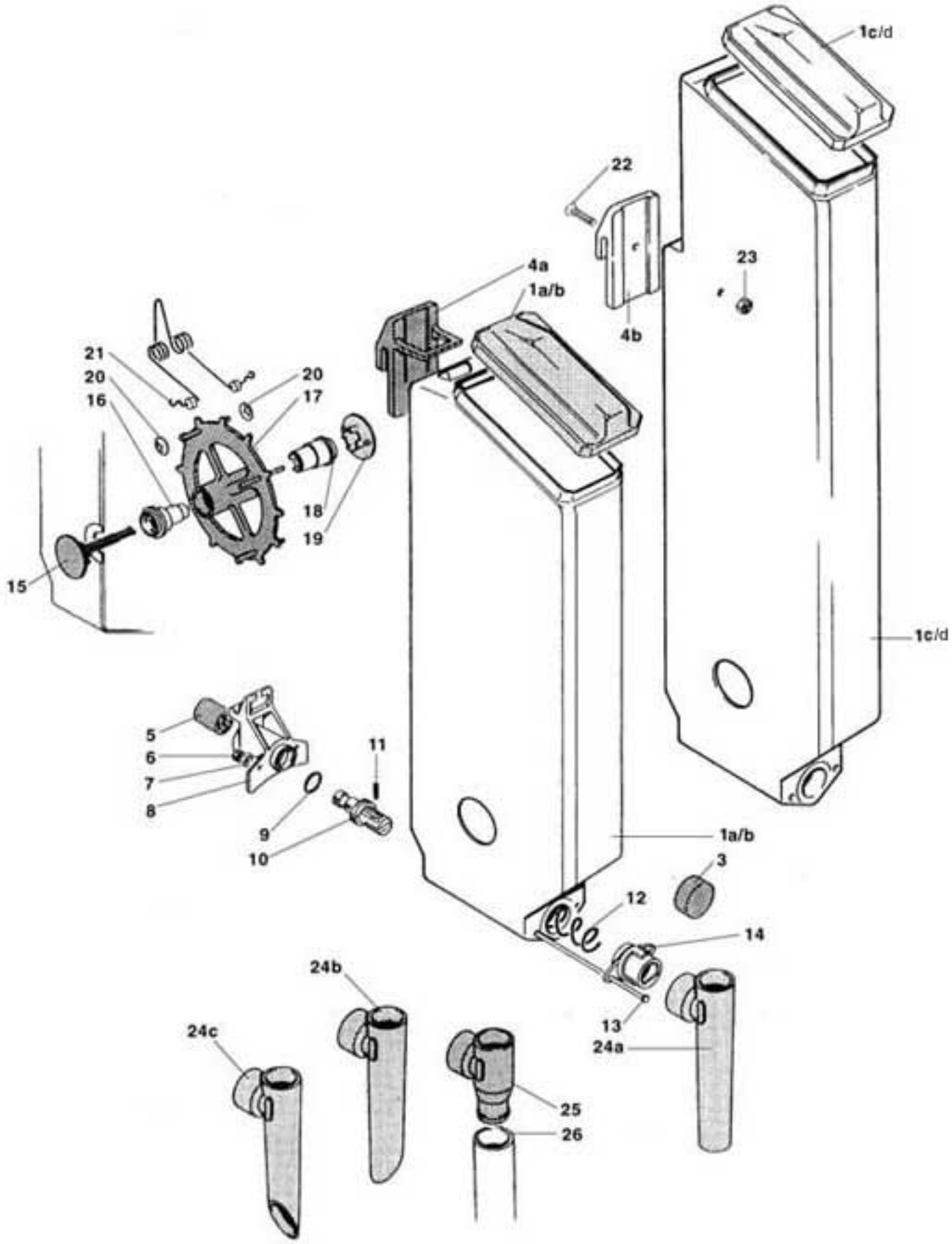

www.rheavendors.com tel: 0039 02 966 551 fax: 0039 02 96 55 086 email: rheavendors@rheavendors.com exclusive property of rheavendors group

product containers		
Pos.	**Code**	**Description**
1/a	70003001AR	§ CANISTER "A"+LID
1/b	70003001BR	§ CANISTER "B"+LID
1/c	Z0230008003AR	§ CANISTER W/HOLE H.650+LID
1/d	Z0230008003BR	§ CANISTER W/O HOLE H.650+LID
3	4002050109AD	INGREDIENT CHUTE PLUG
4/a	70003003	FIX PLATE
4/b	Z0230012018	FIX PLATE
5	Z0230012012	SQUARED PINION
6	VIT0004803	NUT M4
7	VIT0003202	WASHER 4,3X9X0,8
8	70003006	REAR BUSH
9	GUA0000015	OR 119 NBR AL 75 BLACK
10	Z0230012006	SPIRAL WITH FLANGE
11	VIT0005106	PIN 2X14
12/a	70003016	SPIRAL 18
12/b	Z0230024009	SPIRAL 9
13	70003010	BUSH CONNECTOR
14/a	70003008	FRONT BUSH
14/b	70003007	FRONT BUSH
14/c	Z0230012025	FRONT BUSH-REDUCED TRANSITION
15	70003028	PIN
16	70003027	BUSH
17	70003012	WHEEL (PLASTIC)
18	70003026	BUSH
19	70003029	DISK
20	VIT0007102	BENZING CLIP
21	11837	PRODUCT AGITATOR
22	VIT0001205	SCREW COUNT FLAT HEAD M4X12
23	VIT0004810	NUT M4
24/a	4001003072/20R1	§ PROD.CHUTE FRONTAL WHITE
24/b	4001003072/22R1	§ INGREDIENT CHUTE-LEFT WHITE
24/c	4001003072/21R1	§ INGREDIENT CHUTE-RIGHT WHITE
25	Z0230016024	SUGAR CHUTE
26/a	TSIL15/19T-10	SILICON HOSE 15X19 MT.10
100	Z0230017007R	§ CANISTER WHEEL 9
101	Z0230016006R	§ CANISTER SPIRAL 9
102	Z0230018009R	§ CANISTER AGITATOR 18
103	Z0230019005R	§ CANISTER AGITATOR 9-THE
104	Z0230017008R	§ CANISTER WHEEL 18

www.rheavendors.com tel: 0039 02 966 551 fax: 0039 02 96 55 086 email: rheavendors@rheavendors.com exclusive property of rheavendors group

coffee beans container

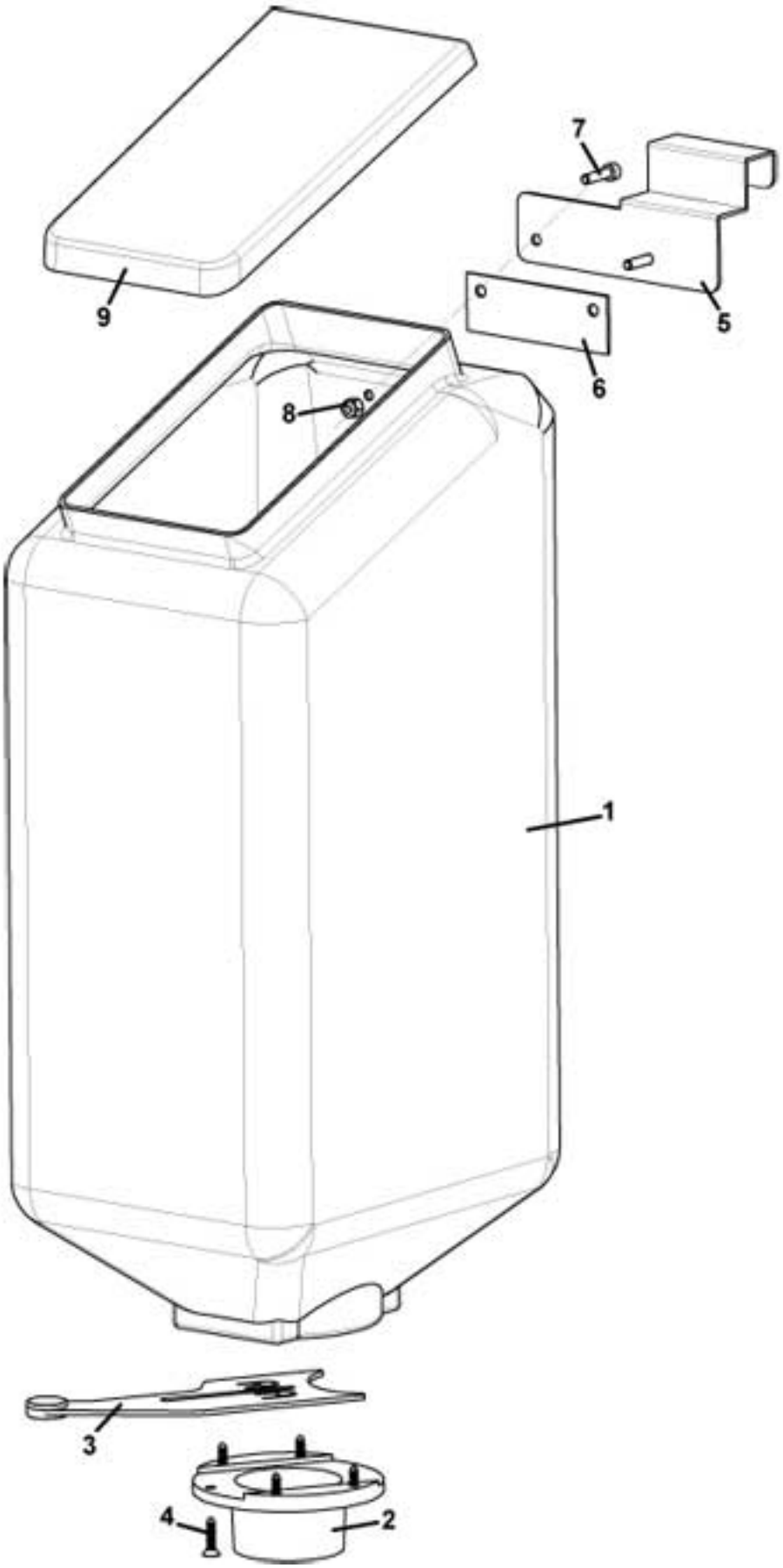

www.rheavendors.com tel: 0039 02 966 551 fax: 0039 02 96 55 086 email: rheavendors@rheavendors.com exclusive property of rheavendors group

coffee beans container		
Pos.	**Code**	**Description**
1	Z0230030415	COFFEE BEANS HOPPER 1 GRINDER
2	Z0230015066NA	COFFEE BEANS HOPPER STOPPER
3	Z0230015207IC	COFFEE BEANS HOPPER STOPPER
4	VIT0002104	SCREW COUNT FLAT HEAD M3.9X16
5	Z0230030418	COFFEE BEANS HOPPER HOOK
6	Z0230030426	PLATE
7	VIT0005510	SCREW HEX HEAD REC TAP M4X16
8	VIT0004810	NUT M4
9	Z0230015057	COFFEE BEANS HOPPER LID

www.rheavendors.com tel: 0039 02 966 551 fax: 0039 02 96 55 086 email: rheavendors@rheavendors.com exclusive property of rheavendors group

control panel

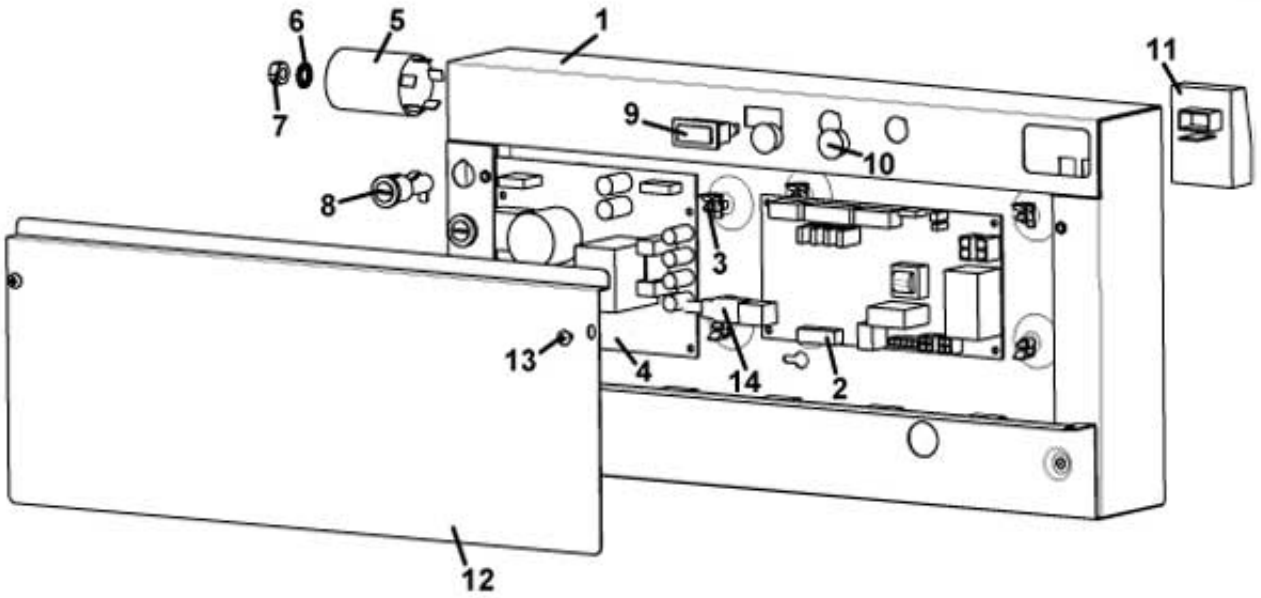

www.rheavendors.com tel: 0039 02 966 551 fax: 0039 02 96 55 086 email: rheavendors@rheavendors.com exclusive property of rheavendors group

control panel		
Pos.	**Code**	**Description**
1	Z0130012305-01	ELECTRICAL PANEL FRAME
2	SCH0007060	POWER BOARD
3	ELE0062003	BOARD SUPPORT
4/a	KITSCH0007622	SWITCHING BOARD + PLATE Up to serial 091399999
4/b	SCHA161001	SWITCHING BOARD from serial 091400001
5	ELE0009055	NOISE FILTER 16A
6	VIT0003106	WASHER D.8,2
7	VIT0004506	NUT M8
8	ELE0003507CL	FUSE HOLDER+FUSE 12A
9	ELE0002305	MOLVENO PLUG
10	GUA0011010	PLUG
11	ELE0055003CL	SUPPLY CABLE
12	Z0130012311	CONTROL PANEL COVER
13	VIT0000030	SCREW HEAD TAP CAP M4X7
14	ELT0030874	USB WIRING 1,5MT
100	Z0130012201CL	ELECTRICAL PANEL
101	Z0130012210CL	E CONTROL PANEL

www.rheavendors.com tel: 0039 02 966 551 fax: 0039 02 96 55 086 email: rheavendors@rheavendors.com exclusive property of rheavendors group