vending machine

spare parts manual

www.rheavendors.com tel: 0039 02 966 551 fax: 0039 02 96 55 086 email: rheavendors@rheavendors.com exclusive property of rheavendors group

cabinet

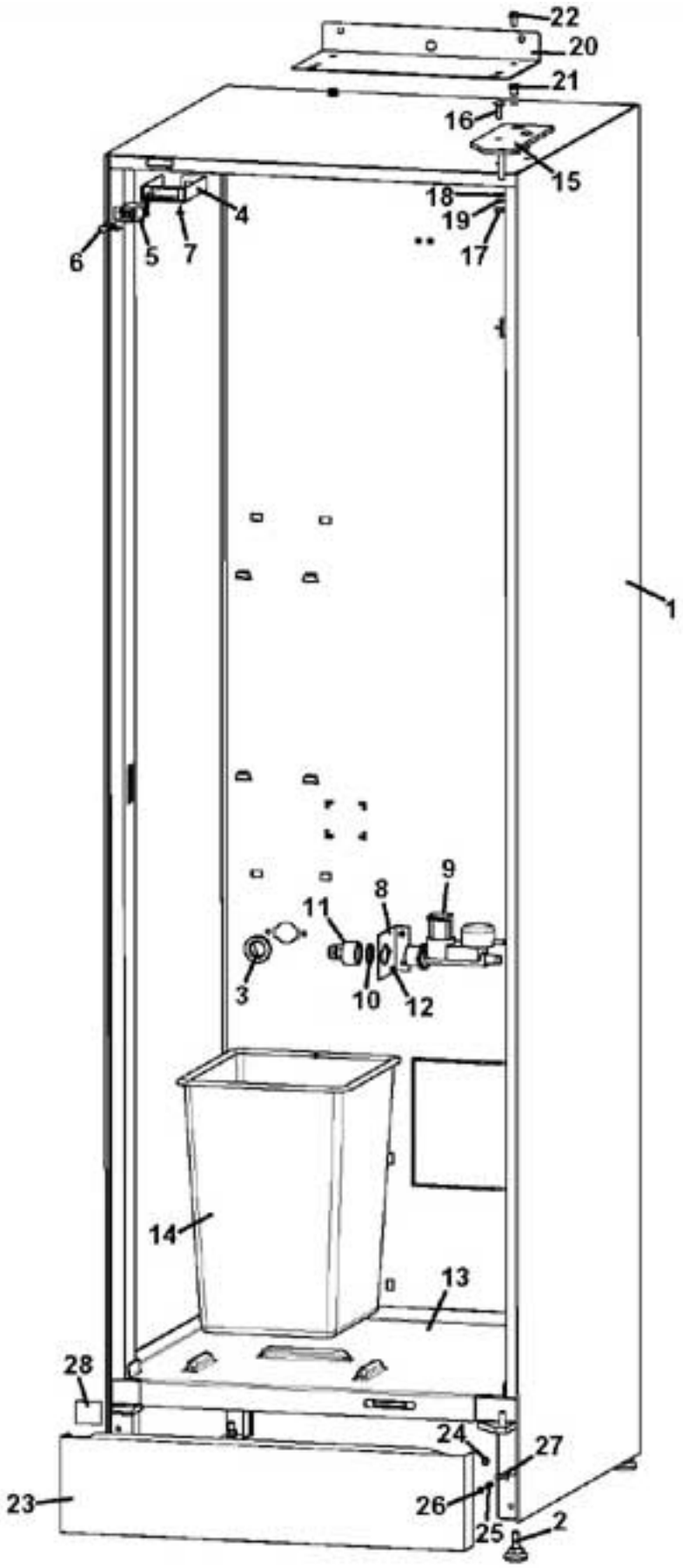

www.rheavendors.com tel: 0039 02 966 551 fax: 0039 02 96 55 086 email: rheavendors@rheavendors.com exclusive property of rheavendors group

cabinet		
Pos.	**Code**	**Description**
1	Z0010014555DAR	CABINET RAL 9022 + PACK
2	VIT0010501	MACHINE FOOT D.30X15
3	GUA0010502	ELECTRICAL GROMMET Ø21
4	Z0270011605-01	DOOR SWITCH SUPPORT
5	ELE0002009	BIPOLAR SWITCH 15A 250V
6	Z0270011109CL	§ SERVICE KEY
7	VIT0002401	SCREW ST HEAD CAP M3.5X9.5
8	Z0070012111CK	INLET H2O VALVE SUP. RAL7037
9	Z0110001119	WATER INLET VALVE 24V DC
10	GUA0000021	OR 130 NBR AL 75 BLACK
11	Z0010019223	H2O INLET CONNECTOR 3/4F-3/8M
12	VIT0002009	SCREW ST HEAD CAP M3.5X6.5
13	Z0010014585NA	BOTTOM PROTECTION
14	CON0000201	BIN
15	Z0010014574	UPPER HINGE
16	VIT0005802	SCREW 6X20
17	VIT0004505	NUT M6
18	VIT0003303	WASHER 6,6X18X1,5
19	VIT0003453	SPRING WASHER 6,4
20	Z0010018071	MACHINE FIXING PLATE
21	VIT0005702	THREADED INSERT
22	VIT0000236	SCREW HEX HEAD M6X11
23/a	Z0010014575NA	KICK PLATE RAL 9005
23/b	Z0010014575DA	KICK PLATE RAL 9022
24	Z0020018061	SELECTION BUTTON PLUG
25	VIT0009151	PIN M4
26	VIT0004503	NUT M4
27	VIT0009152	WASHER
28	Z0010014238	KICK PLATE

www.rheavendors.com tel: 0039 02 966 551 fax: 0039 02 96 55 086 email: rheavendors@rheavendors.com exclusive property of rheavendors group

external door

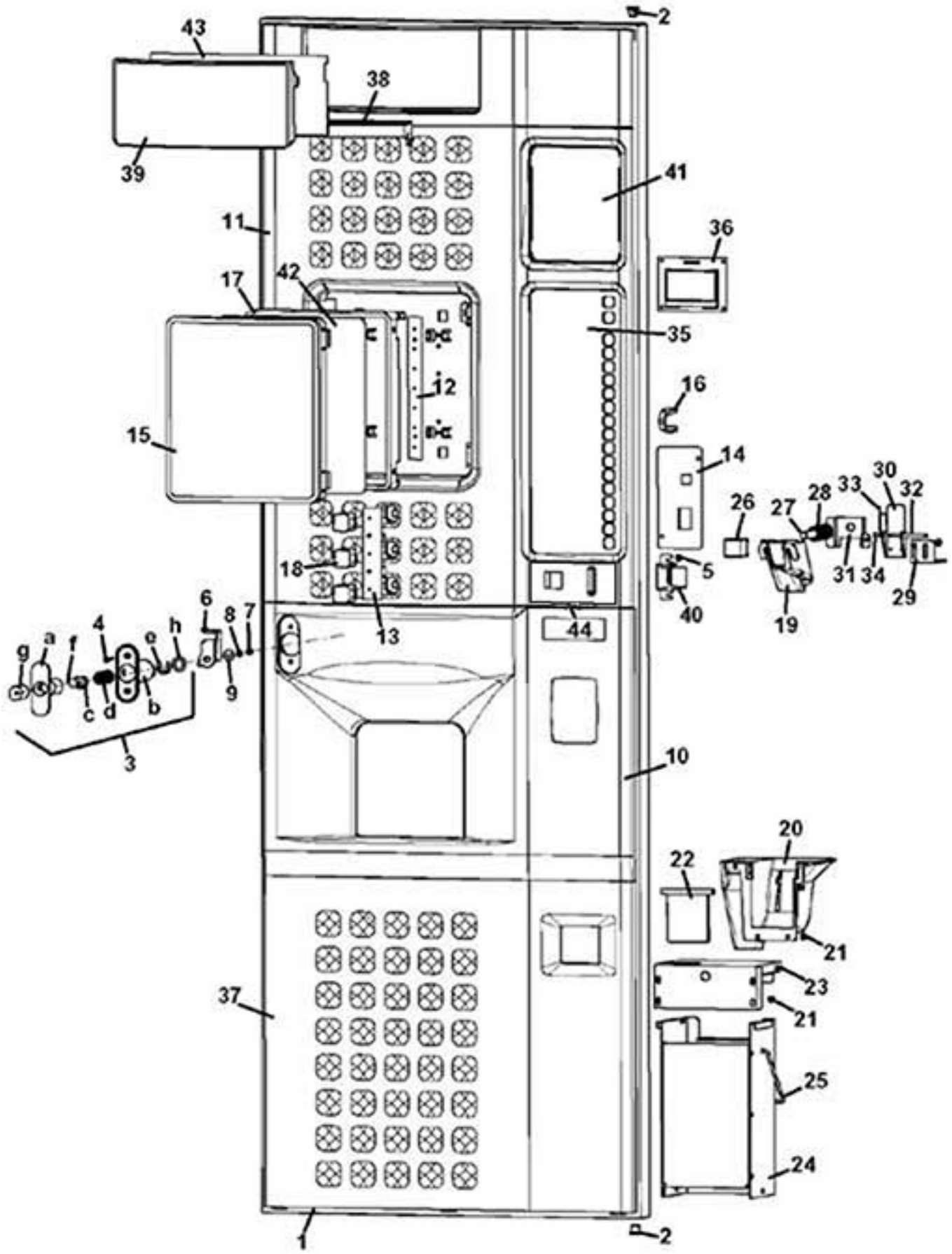

www.rheavendors.com tel: 0039 02 966 551 fax: 0039 02 96 55 086 email: rheavendors@rheavendors.com exclusive property of rheavendors group

external door		
Pos.	**Code**	**Description**
1	Z0020038205DA	DOOR RAL9022
2	Z0020034156	DOOR HINGE BUSH
3_1	1150003337DA	LOCK RAL9022
3_1a	1150002112DA	SLEEVE RAL9022
3_1b	1150003336DA	SLEEVE RAL9022
3_1c	1150002111	PIN
3_1d	1150002113	SPRING
3_1e	VIT0006508	RING 10
3_1f	VIT0005203	DOWEL PIN 4X18
3_1g	SER0000003	LOCK c.7851
3_1h	1150003054	NYLON SPACER MM.20X12,5X1
3_2	1150003342DA	LOCK ASSEMBLY (GREY RAL 9022)
3_2a	1150002112DA	SLEEVE RAL9022
3_2b	1150003336DA	SLEEVE RAL9022
3_2c	1150002111	PIN
3_2d	1150002113	SPRING
3_2e	VIT0006508	RING 10
3_2f	VIT0005203	DOWEL PIN 4X18
3_2g	SER0000022	LOCK
3_2h	1150003054	NYLON SPACER MM.20X12,5X1
4	VIT0000127	SCREW COUNT FLAT HEAD M4X35
5	VIT0004815	NUT M4
6	Z0020038128	LOCK HOOK
7	VIT0000208	SCREW HEX HEAD M5X10
8	VIT0003104	SPRING WASHER 5,3
9	VIT0003302	WASHER 5,5X15X1,6
10/a		See table 2 turrets cups station
10/b		See table 1 turret cups station
11	Z0020038221DA	KEYPAD FRAME RAL9022
12	SCH0007820	7 LED BOARD
13	SCH0008940	BOARD 3 LED
14	Z0020038233	LED BOARD HOLDER
15	Z0020038213	PLEXIGLASS PICTURE
16	Z0020042175	PLEXIGLASS HOOK
17/a	Z0020038214IE	GRAPHIC PANEL FRAME ORANGE
17/b	Z0020038214PN	GRAPHIC PANEL FRAME BLUE
18/a	Z0020038216IE	SUPPLY DRINK LED PLEXIGL ORANG
18/b	Z0020038216PN	PLEXIGLASS LED BLUE
19	Z0020042051CY	COINS ENTRY CHUTE RAL9018
20	Z0020042014CY	COINS RETURN CHUTE RAL9018
21	VIT0002401	SCREW ST HEAD CAP M3.5X9.5
22	Z0020038144XC	COINS RETURN FLAP CHROME
23	Z0020038145	COIN BOX LID
24	Z0030006255CL0	§COIN BOX Include cod.Z0030006258 HOOK
25	Z0030006258	COIN BOX HOOK
26	4050010072XC	COIN RETURN BUTTON CHROMO
27	Z0020034023	COIN RETURN PIN

www.rheavendors.com tel: 0039 02 966 551 fax: 0039 02 96 55 086 email: rheavendors@rheavendors.com exclusive property of rheavendors group

external door		
28	4050010074	COIN RETURN BUTTON SPRING
29	Z0020038155	LOWER BRACKET
30	Z0020042057	UPPER BRACKET
31	Z0020038129	COIN RETURN BUTTON CONNECTOR
32	Z0020034187	PIN
33	Z0020005013	COIN REJECT BUTTON SPRING
34	VIT0007005	DUO-CLIPSE 4 PLATE
35		See table KEYBOARD
36	SCH0008381	DISPLAY
37	Z0020038212DA	COIN RETURN SURROUND (RAL9022)
38/a	Z0020038211IE	PLEXIGLASS LED ORANGE
38/b	Z0020038211PN	PLEXIGLASS LED BLUE
39	Z0020038227	UPPER PLEXIGLASS
40	Z0020038260	LOCK PROTECTION
41	Z0020038219DA	SYS. PAYMENT PLATE RAL9022
42		Please communicate the panel needed
43		Please communicate the panel needed
44	Z0020038278	SELF-ADHESIVE METAL PLATE

www.rheavendors.com tel: 0039 02 966 551 fax: 0039 02 96 55 086 email: rheavendors@rheavendors.com exclusive property of rheavendors group

internal door

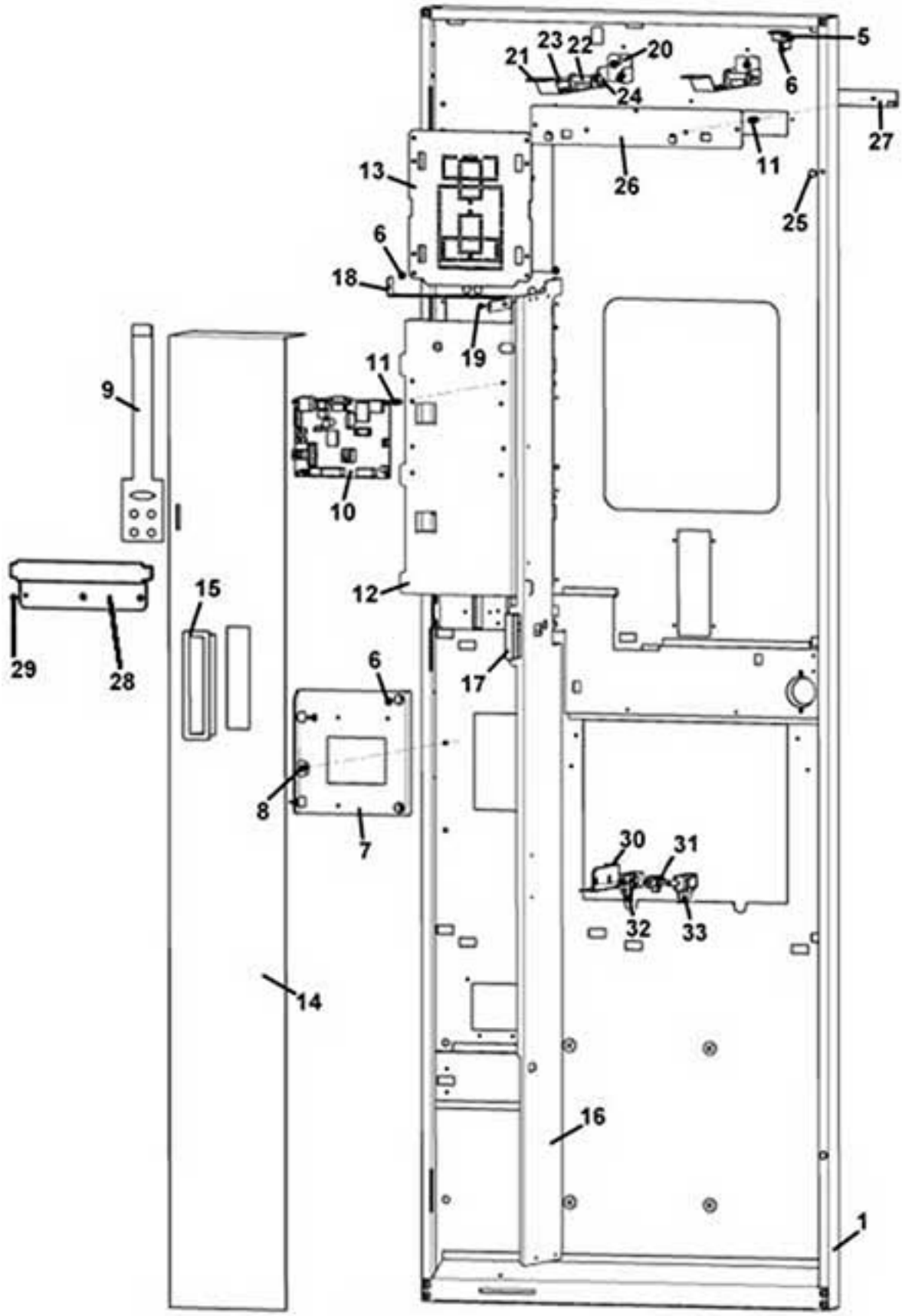

www.rheavendors.com tel: 0039 02 966 551 fax: 0039 02 96 55 086 email: rheavendors@rheavendors.com exclusive property of rheavendors group

internal door		
Pos.	**Code**	**Description**
1	Z0020038205DA	DOOR RAL9022
5	Z0270011485	SWITCH PLATE
6	VIT0002401	SCREW ST HEAD CAP M3.5X9.5
7	Z0020038125	PAYMENT SYSTEM SUPPORT
8	4060010126	PAYM SYSTEM FIXING SCREW
9	Z0020038124	PROGRAMMING KEYPAD
10	SCH0007904	CPU BOARD (2017)
11	ELE0062003	BOARD SUPPORT
12	Z0020038255	CPU SUPPORT
13/a	Z0020038142	PAYMEN SYSTEM PLATE
13/b	Z0020038265	PAYMENT SYSTEM PLATE + KEY
14	Z0020038592	PAYM SYSTEM COVER
15	Z0020034823	HANDLE
16	Z0020038257	COIN RETURN BOX PROTECTION
17	ELE0000103	MAGNETIC CLICK-LOCK
18	Z0020038419	COIN BOX REINFORCE For the version with 2 turrets
19	VIT0002009	SCREW ST HEAD CAP M3.5X6.5
20	Z0020042124	UPPER HINGE TURRET SUPPORT
21/a	Z0020038404	UPPER HINGE 2 TURRETS For the version with 2 turrets
21/b	Z0020042126	TURRET 4COLUMNS UPPER HINGE For the version with 1 turret
22	Z0020038167	HINGE SPACER
23	Z0020034173	DOOR STOP IN
24	VIT0007102	BENZING CLIP
25	Z0020018061	SELECTION BUTTON PLUG
26	Z0020038232	UPPER GLASS LED BOARD SUPPORT
27	SCH0007820	7 LED BOARD
28	Z0020038176	INGREDIENT CANISTER SUPPORT
29	VIT0007021	BLIND RIVET 3X6
30	Z0400008457	CUP SENSOR SUPPORT
31	ELT0006813	DISTANCE SENSOR
32	Z0020040671	CUP SENSOR LOWER COVER
33	Z0020040672	CUP SENSOR UPPER COVER

www.rheavendors.com tel: 0039 02 966 551 fax: 0039 02 96 55 086 email: rheavendors@rheavendors.com exclusive property of rheavendors group

KEYBOARD

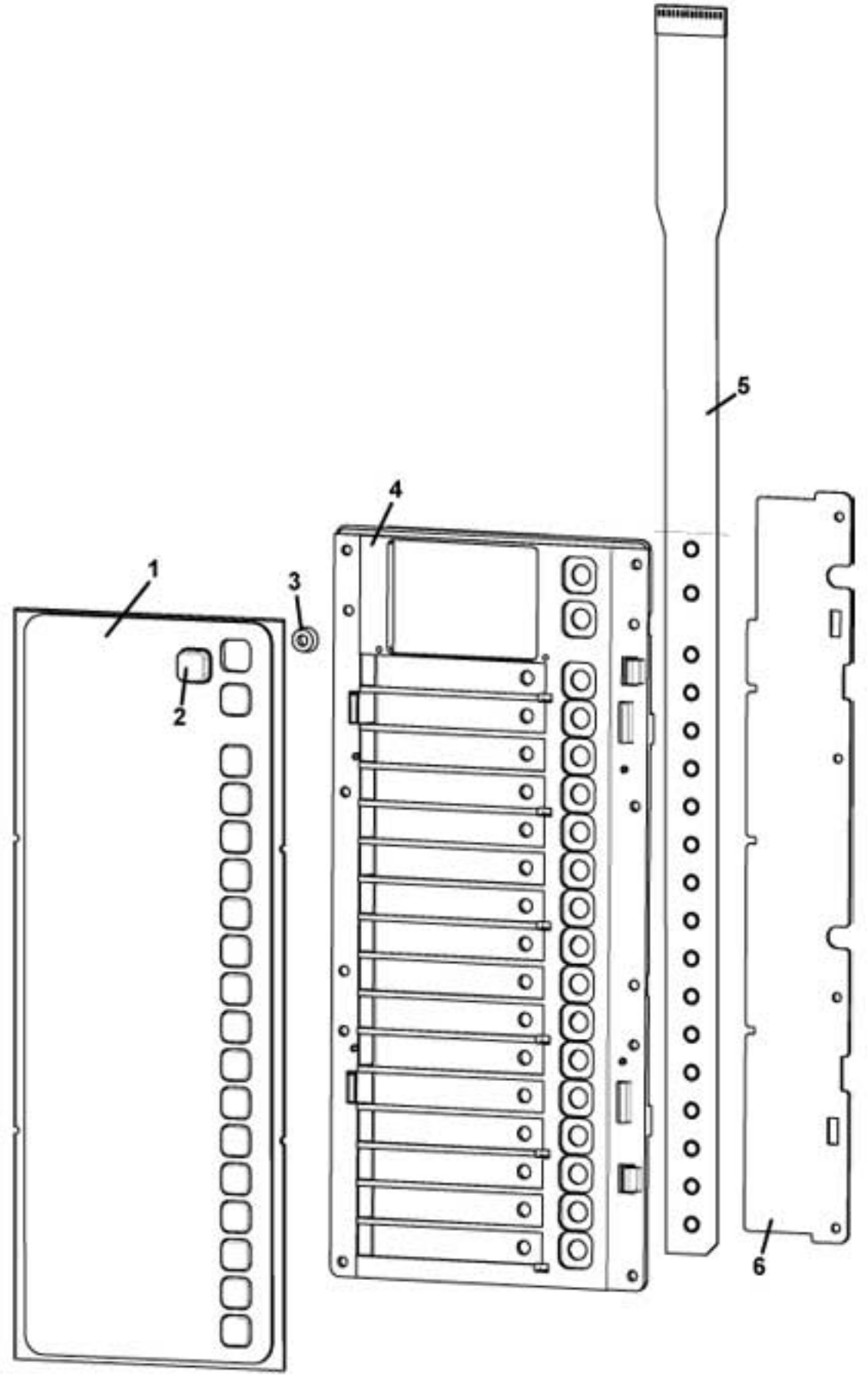

www.rheavendors.com tel: 0039 02 966 551 fax: 0039 02 96 55 086 email: rheavendors@rheavendors.com exclusive property of rheavendors group

KEYBOARD		
Pos.	**Code**	**Description**
1	Z0020038252DAR1	§ PLEXIGLASS FR. PANEL+LABELS
2/a	Z0020038254CF	SELECTION BUTTON RAL7016
2/b	Z0020038254IC	SELECTION BUTTON RAL2011
3	Z0020034311	SPRING
4	Z0020038253	KEYBOARD HOLDER PANEL
5	Z0020038256	KEYPAD 18 BUTTON
6	Z0020038251	KEYPAD SUPPORT
100	Z0020038252DAR	§ PLEXIGLASS FR. PANEL RAL9022

www.rheavendors.com tel: 0039 02 966 551 fax: 0039 02 96 55 086 email: rheavendors@rheavendors.com exclusive property of rheavendors group

2 turrets cups station

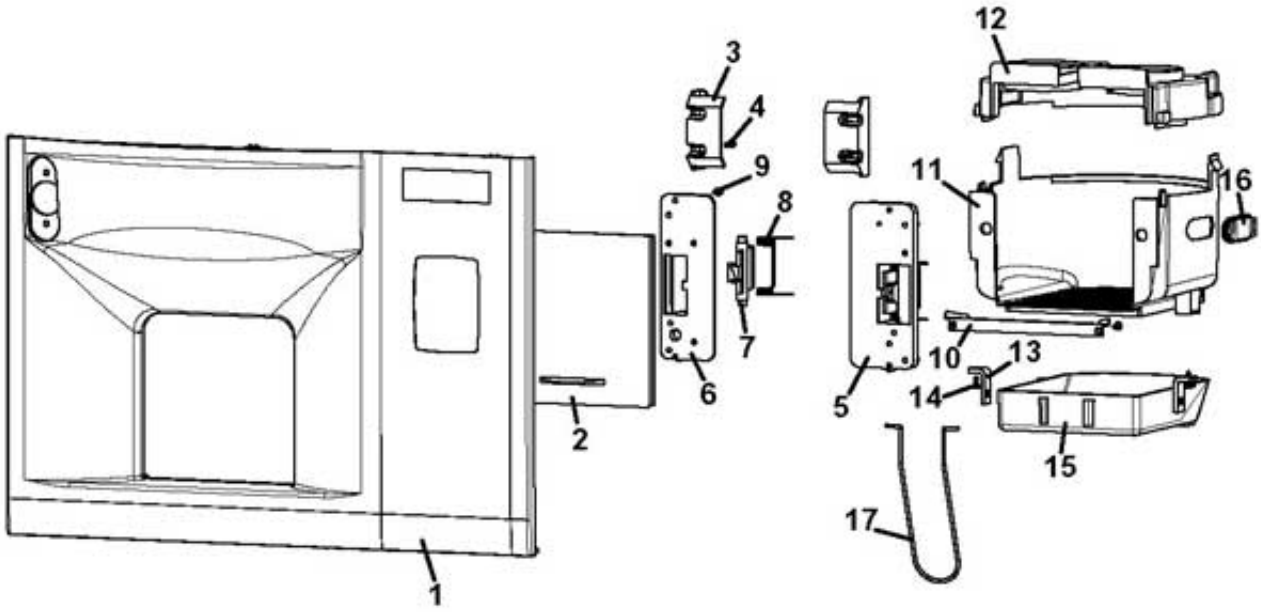

www.rheavendors.com tel: 0039 02 966 551 fax: 0039 02 96 55 086 email: rheavendors@rheavendors.com exclusive property of rheavendors group

2 turrets cups station		
Pos.	**Code**	**Description**
1/a	Z0020038126CM	CUPS STATION FRAME RAL9006
1/b	Z0020038126DA	CUPS STATION FRAME RAL9022
2	Z0400008009/2	CUP STATION FLAP
3	Z0020034168NA	CUP STATION DOOR GUIDE BLACK
4	VIT0002466	SCREW HEAD TAP M3.5X16
5	Z0400007014NA	L.H. CUP STAT. PLATE BLACK
6	Z0400007027NA	R.H. CUP STAT. PLATE BLACK
7	Z0400009501CW	PLATE STOPPER RAL 7043
8	Z0400007021	SPRING
9	VIT0002469	SCREW HEAD TAP M3.5X10
10	Z0150001056	DRIP TRAY
11	Z0400009502CW	CUPS STATION FRAME RAL7043
12	Z0400009504CW	CUPS STATION COVER RAL7043
13	Z0400008101NA	CHUTE SUPPORT BLACK
14	VIT0002004	SCREW ST HEAD CAP M3.5X13
15	Z0400009506CW	DRIP TRAY RAL7043
16	Z0400009508	TRANSPARENT GLASS
17	Z0150001053	DRIP TRAY SPRING

www.rheavendors.com tel: 0039 02 966 551 fax: 0039 02 96 55 086 email: rheavendors@rheavendors.com exclusive property of rheavendors group

1 turret cups station

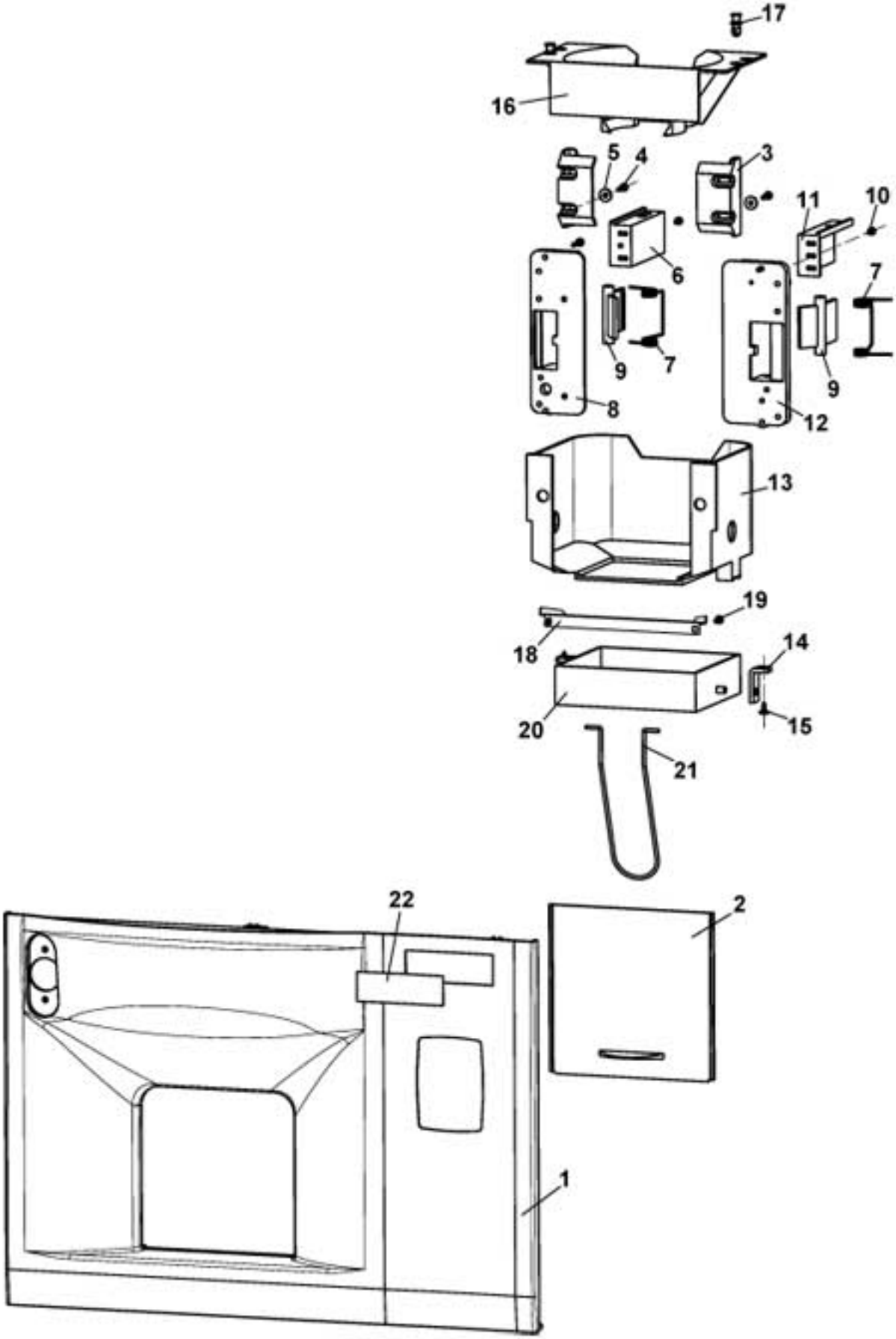

www.rheavendors.com tel: 0039 02 966 551 fax: 0039 02 96 55 086 email: rheavendors@rheavendors.com exclusive property of rheavendors group

1 turret cups station		
Pos.	**Code**	**Description**
1	Z0020038126DA	CUPS STATION FRAME RAL9022
2	Z0400008009/2	CUP STATION FLAP
3	Z0020034168NA	CUP STATION DOOR GUIDE BLACK
4	VIT0002004	SCREW ST HEAD CAP M3.5X13
5	VIT0003301	WASHER 4,3X12X1,5
6	Z0400006011NA	RIGHT BRACKET BLACK
7	Z0400007021	SPRING
8	Z0400007027NA	R.H. CUP STAT. PLATE BLACK
9	Z0400007017NA	BLOCK PLATE BLACK
10	VIT0002004	SCREW ST HEAD CAP M3.5X13
11	Z0400006026NA	LEFT BRACKET BLACK
12	Z0400008554NA	L.H. CUP STAT. PLATE
13	Z0400008562NA	CUPS STATION FRAME BLACK
14	Z0400008101NA	CHUTE SUPPORT BLACK
15	VIT0002401	SCREW ST HEAD CAP M3.5X9.5
16	Z0400006033NA	CUP SUPPORT BLACK
17	VIT0007104R	§ BUSH+BUTTON
18	Z0150001056	DRIP TRAY
19	VIT0002469	SCREW HEAD TAP M3.5X10
20	Z0150001052NA	FUNNEL BLACK
21	Z0150001053	DRIP TRAY SPRING
22		Please communicate the language and the configuration needed

www.rheavendors.com tel: 0039 02 966 551 fax: 0039 02 96 55 086 email: rheavendors@rheavendors.com exclusive property of rheavendors group

cups loader (2 turrets)

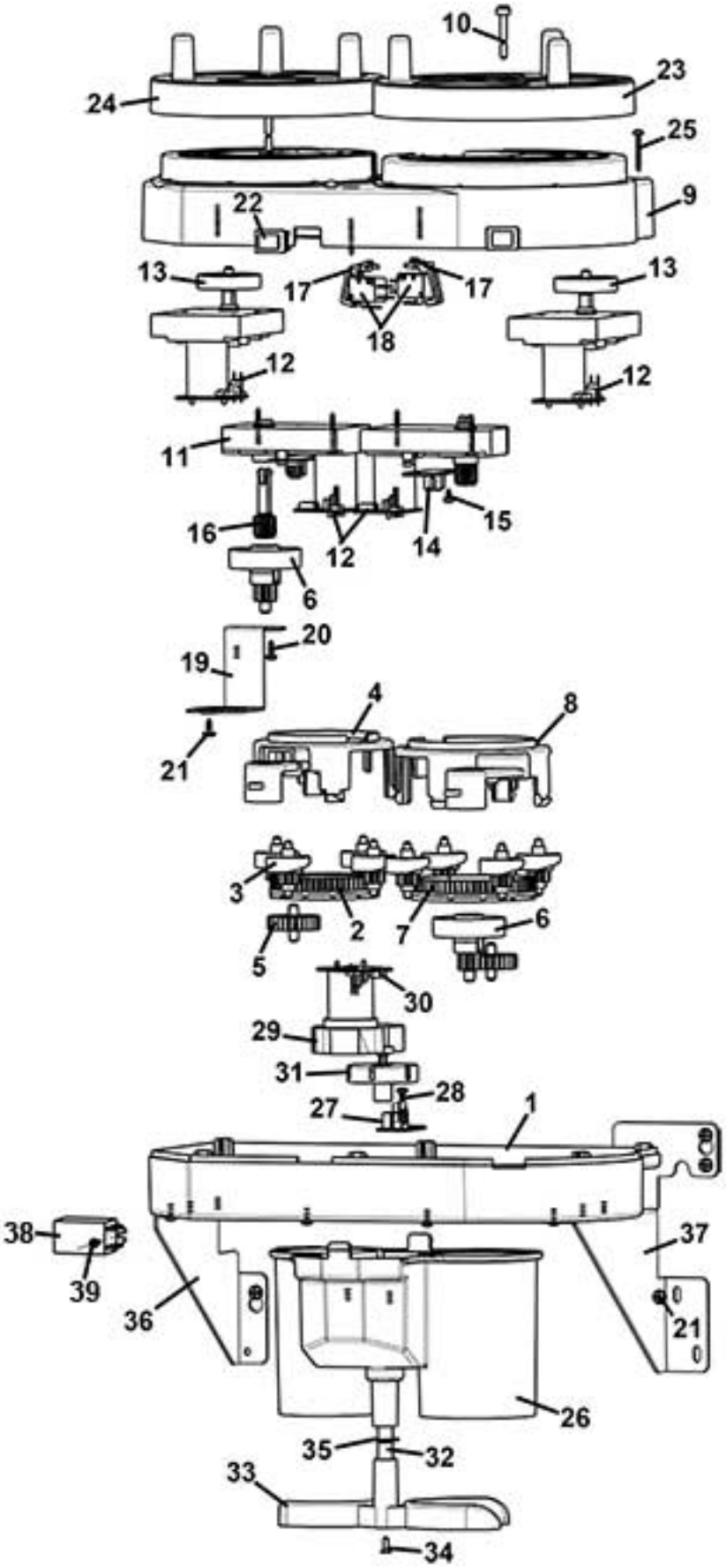

www.rheavendors.com tel: 0039 02 966 551 fax: 0039 02 96 55 086 email: rheavendors@rheavendors.com exclusive property of rheavendors group

cups loader (2 turrets)		
Pos.	**Code**	**Description**
1	Z0190006729CW	PALLETS LOWER PLATE RAL 7043
2	Z0190006726	Z57 RING NUT
3	Z0190006506IC	SPLIT UP D.70/78-ORANGE PL
4	Z0190006732CW	CUP SPLITTER COVER D.53 7043
5	Z0190006528	Z26 WHEEL WHITE
6	Z0190006511NA	CUPS TURRET SPINDLE BLACK
7	Z0190006523	TOOTHED RING NUT D.70/73
8	Z0190006731CW	D.70 CUP GUIDE RAL 7043
9	Z0190006727CW	PALLETS UPPER PLATE RAL 7043
10	Z0190006751	PIN
11	Z0090002114R1	§ GEARBOX MOTOR 11RPM 24V DC
12	SCH0007020	MOTOR FILTER
13	Z0190006744	SPROCKET WHEEL
14	SCH0007000	SPLIT UP SENSOR
15	VIT0002002	SCREW ST HEAD CAP M3.5X6.5
16	Z0190006518	TOOTHED SHAFT Z18 WHITE
17	Z0190006556KA	MICROSWITCH LEVER RAL3020
18	ELE0001530	MICROSWITCH 3A 125-250VA
19	Z0190006743	CONNECTOR SUPPORT
20	VIT0002469	SCREW HEAD TAP M3.5X10
21	VIT0002401	SCREW ST HEAD CAP M3.5X9.5
22	ELE0002258	PUSH BUTTON RED
23	Z0190006735CW	70 TURRET ROTATION RING NUT
24	Z0190006736CW	53 TURRET ROTATION RING NUT
25	VIT0002456	SCREW HEAD TAP M3.5X25
26	Z0190006734CW	CUPS FEEDER (RAL 7043)
27	SCH0008260	FORK SENSOR
28	VIT0002009	SCREW ST HEAD CAP M3.5X6.5
29	Z0090002197	GEAR MOTOR 11RPM 24V DC
30	SCH0003740	MOTOR FILTER
31	Z0190006733NA	POSITION DISK BLACK
32	Z0190006737	CUP FORK SUPPORT PIN
33	Z0190006728CW	CUPS FORK RAL7043
34	VIT0000107	SCREW COUNT FLAT HEAD M4X10
35	VIT0006518	RING 9
36	Z0020038401	LEFT TURRET SUPPORT
37	Z0020038402	RIGHT TURRET SUPPORT
38	ELE0001014	RELAY 24 V DC WITH SUPPORT
39	VIT0002009	SCREW ST HEAD CAP M3.5X6.5
100	Z0190006701CL	§ 2 CUPS DISP. 3C D.53/70 PL From pos. 1 to pos. 37

www.rheavendors.com tel: 0039 02 966 551 fax: 0039 02 96 55 086 email: rheavendors@rheavendors.com exclusive property of rheavendors group

cups turret (2 TURRETS)

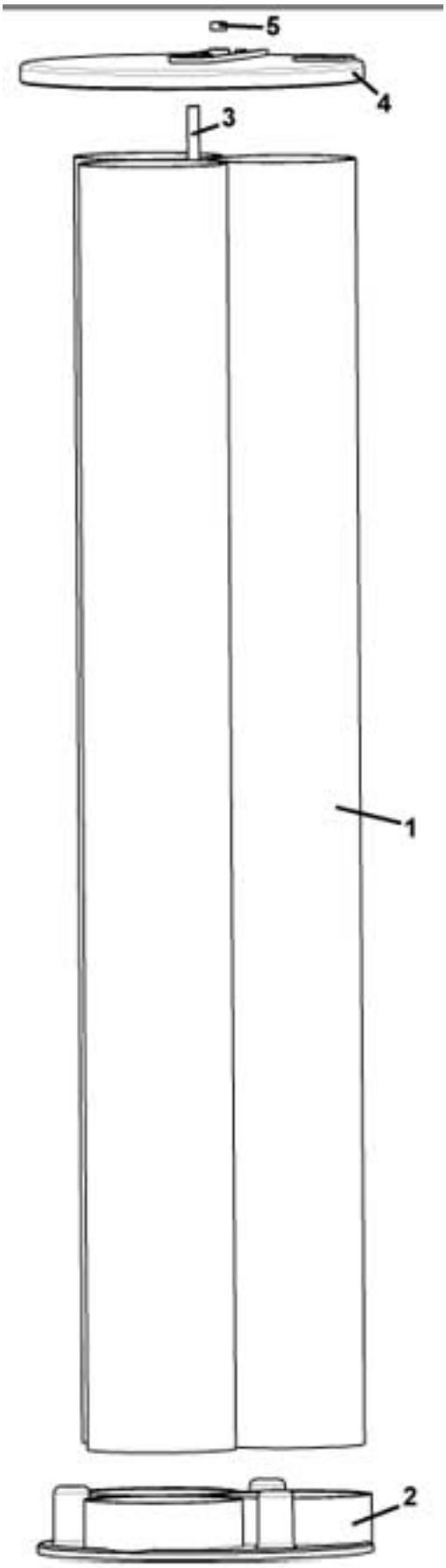

www.rheavendors.com tel: 0039 02 966 551 fax: 0039 02 96 55 086 email: rheavendors@rheavendors.com exclusive property of rheavendors group

cups turret (2 TURRETS)		
Pos.	**Code**	**Description**
1/a	Z0180013151	2 TURRETS PIPE D.66/62MM L680M
1/b	Z0180013152	2 TURRETS PIPE D.78/74MM L680M
2/a	Z0190006738CW-02	HOSE GUIDE D.62-66 (RAL 7043)
2/b	Z0190006739CW-02	HOSE GUIDE D.74-78 (RAL 7043)
3	Z0180013155	TIE-BOLT
4/a	Z0190006747CW	62/66 2 TURRETTS COVER
4/b	Z0190006748CW	2 TURRETTS COVER D.70 RAL 7043
5	ELT0030560	MAGNET D.8X4

www.rheavendors.com tel: 0039 02 966 551 fax: 0039 02 96 55 086 email: rheavendors@rheavendors.com exclusive property of rheavendors group

cups loader (1 turret)

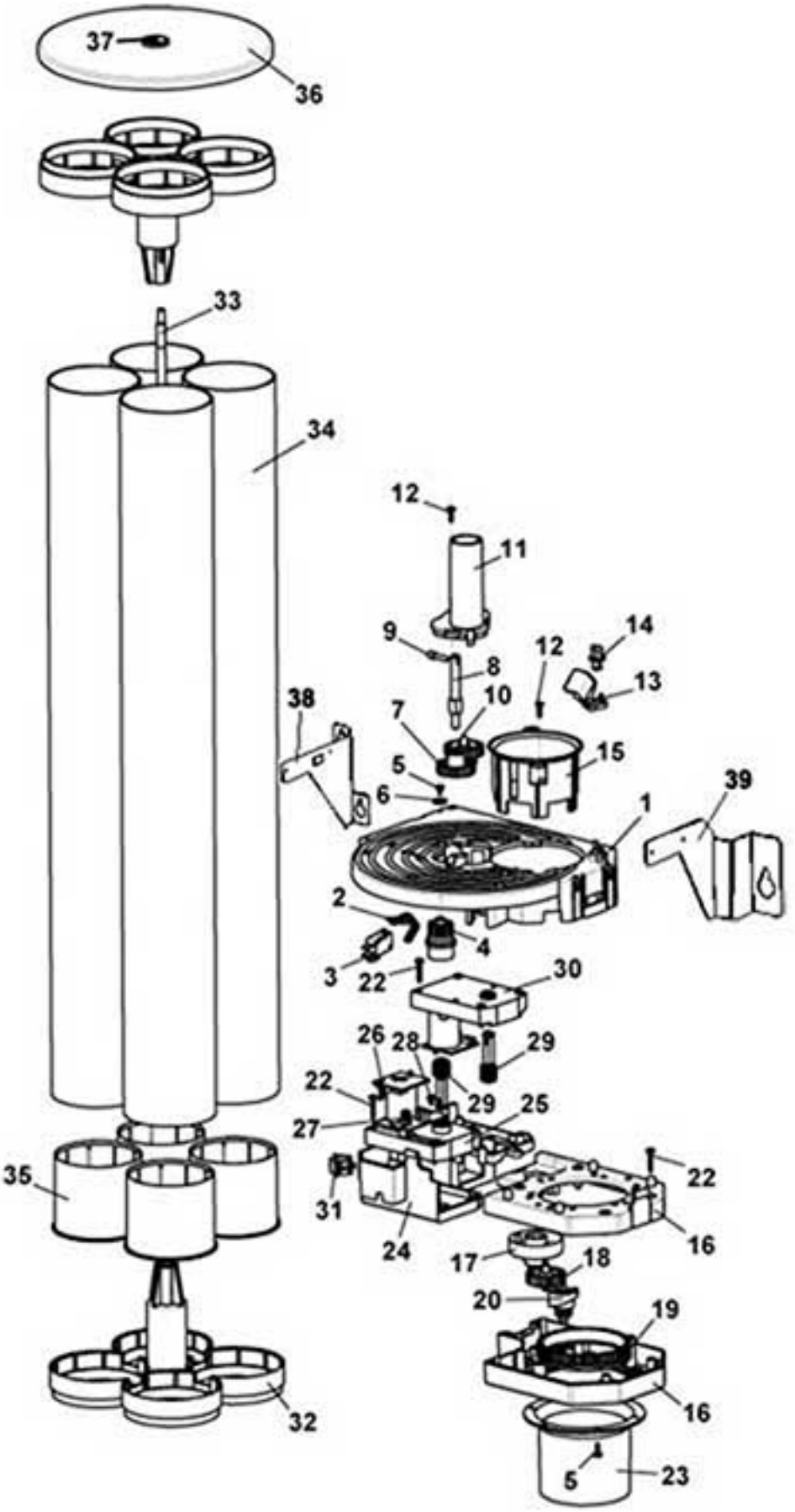

www.rheavendors.com tel: 0039 02 966 551 fax: 0039 02 96 55 086 email: rheavendors@rheavendors.com exclusive property of rheavendors group

cups loader (1 turret)		
Pos.	**Code**	**Description**
1	Z0190006534CY-03	TURRET SUPPORT RAL9018
2	Z0190006543-01	MICROSWITCH LEVER WHITE
3	ELE0001530	MICROSWITCH 3A 125-250VA
4	Z0190006546	CUP DISPENSER MOTOR CONNECTOR
5	VIT0002469	SCREW HEAD TAP M3.5X10
6	VIT0003301	WASHER 4,3X12X1,5
7	Z0190006503	Z26 WHEEL TURRET (WHITE)
8	Z0190006536	TURRET SHAFT
9	Z0190006553	PIN
10	Z0190006544	Z16 PINION WHITE
11	Z0190006537CY	TURRET CUP CONNEC. 4C. RAL9018
12	VIT0002101	SCREW COUNT FLAT HEAD M3.5X13
13	Z0190006554CYR	§ TURRET STOPPER LEVER+PIN Pos.13+14
15/a	Z0190006538CF	CUPS REDUCER D.70 RAL7016
15/b	Z0190006539CY	CUPS REDUCER D.73 RAL9018
16	Z0190006521CYR	LOWER/UPPER CUP DROP MECH.
17	Z0190006511NA	CUPS TURRET SPINDLE BLACK
18	Z0190006528	Z26 WHEEL WHITE
19/a	Z0190006523	TOOTHED RING NUT D.70/73
19/b	Z0190006507	TOOTHED RING NUT D.78/80 WHITE
20/a	Z0190006506IC	SPLIT UP D.70/78-ORANGE PL
20/b	Z0190006552CI	SPLIT UP D.73-GREY PL
20/c	Z0190006502	CUP SPLITTER D.73/80 PP WHITE
20/d	Z0190006551GJ	SPLIT UP D.70/78-YELLOW PP
22	VIT0002456	SCREW HEAD TAP M3.5X25
23/a	Z0190006514CY	CUPS CHUTE 70/73 RAL9018
23/b	Z0190006515CY	CUPS CHUTE 78/80 RAL9018
24	Z0190006522CY	MOTOR SUPPORT RAL9018
25	Z0090002123R	§ GEARBOX MOTOR 5,5RPM 24V DC
26	SCH0007020	MOTOR FILTER
27	SCH0007000	SPLIT UP SENSOR
28	VIT0002002	SCREW ST HEAD CAP M3.5X6.5
29	Z0190006518	TOOTHED SHAFT Z18 WHITE
30	Z0090002114R2	§ GEARBOX MOTOR 11RPM 24V DC
31	ELE0002258	PUSH BUTTON RED
32	Z0180013105-02CY	CUP TURRET SPINDLE 4C RAL9018
33	Z0180013114	1 TURRET SHAFT
34	Z0180013109	CUP HOLDER 1T D.84/81MM L680MM
35	Z0180013113	D.70 COLUMN REDUCTION (WHITE)
36	Z0180013107CY	CUPS TURRET LID 4C. RAL9018
37	ELT0030560	MAGNET D.8X4
38/a	Z0020038121	TURRET LEFT SUPPORT
38/b	Z0020038192	L.H. TURRET SUPPORT CUP 80 For version with cups Ø80
39/a	Z0020038122	TURRET RIGHT SUPPORT
39/b	Z0020038123	TURRET RIGHT SUPPORT W/STIRRER
39/c	Z0020038191	R.H. TURRET SUPPORT CUP 80 For version with cups Ø80
100	Z0190006522CLR	§ CUPS DISPENSER MOTOR SUPPORT From pos. 24 to pos. 31

www.rheavendors.com tel: 0039 02 966 551 fax: 0039 02 96 55 086 email: rheavendors@rheavendors.com exclusive property of rheavendors group

cups loader (1 turret)		
101	Z0180013100R1	§ CUPS TURRET 4COLUMNS D.70/73 From pos. 32 a pos. 36

www.rheavendors.com tel: 0039 02 966 551 fax: 0039 02 96 55 086 email: rheavendors@rheavendors.com exclusive property of rheavendors group

stirrer dispenser (2 TURRETS)

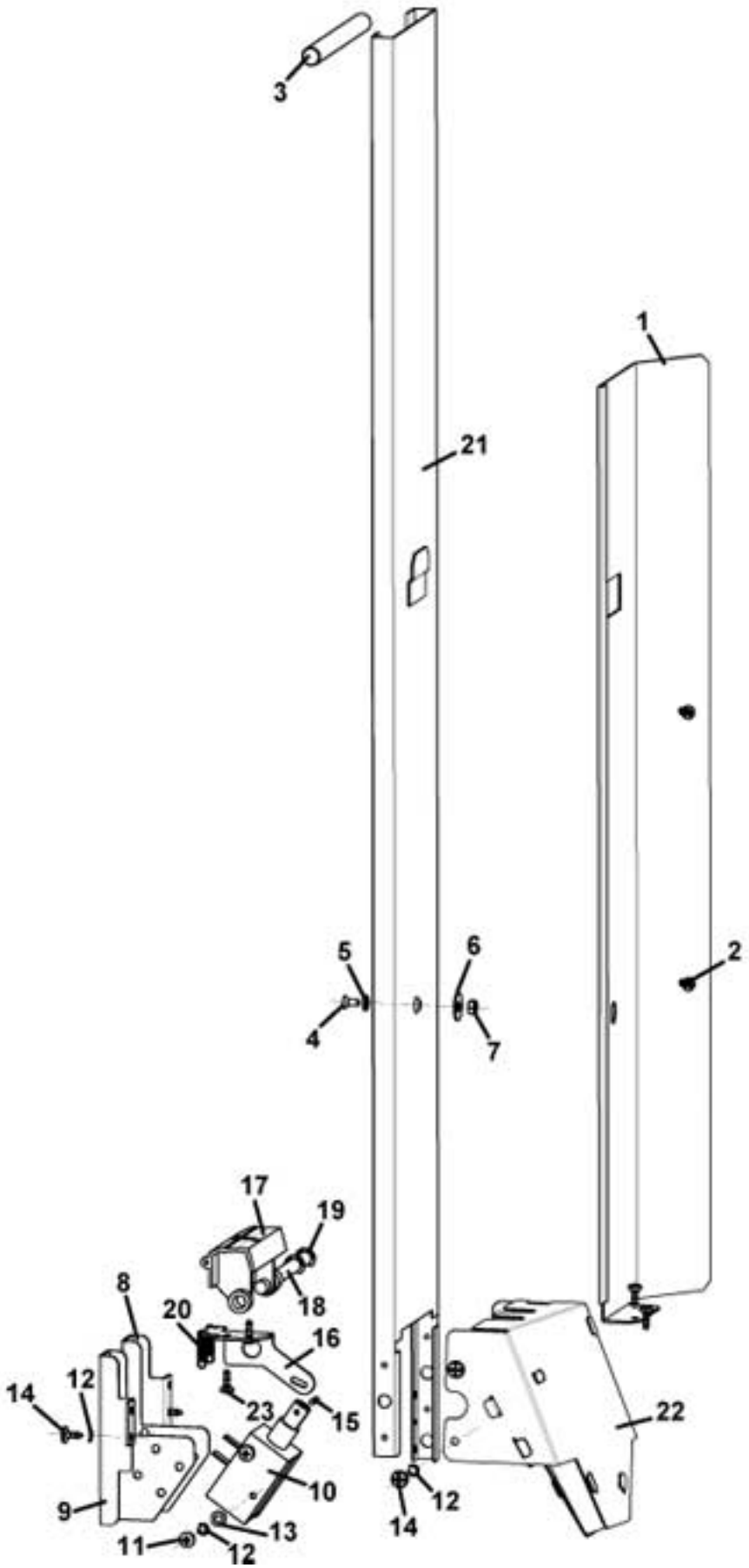

www.rheavendors.com tel: 0039 02 966 551 fax: 0039 02 96 55 086 email: rheavendors@rheavendors.com exclusive property of rheavendors group

stirrer dispenser (2 TURRETS)		
Pos.	**Code**	**Description**
1	Z0020038403	STIRRER DISPENSER SUPPORT
2	VIT0002009	SCREW ST HEAD CAP M3.5X6.5
3	4001012030	STIRRER WEIGHT 89MM
4	VIT0000106	SCREW COUNT FLAT HEAD M4X8
5	VIT0003103	SPRING WASHER 4,3
6	VIT0003302	WASHER 5,5X15X1,6
7	VIT0004503	NUT M4
8	Z0450011138	LEFT ELECTROMAGNET SUPPORT
9	Z0450011137	RIGHT ELECTROMAGNET SUPPORT
10	ELE0000055	ELECTROMAGNET 5% 24V DC
11	VIT0000021	SCREW HEAD TAP CAP M4X6
12	VIT0003405	SPRING WASHER 4,3
13	VIT0003003	WASHER 4,3X8X0,8
14	VIT0002401	SCREW ST HEAD CAP M3.5X9.5
15	VIT0005211	DOWEL PIN 2.5X12
16	Z0450003108	ELECTROMAGNET CONNECTING ROD
17	Z0450002003	STIRRER EJECTOR
18	Z0450003008	STICKS DISPENSER PIN 89 mm
19	VIT0006504	RING 5
20	Z0450003010	SPRING
21	Z0450011135	STICKS CONTAINER mm 89
22	Z0450011132CW	STIRRER CHUTE (TRAFFIC GREY RA
23	VIT0002469	SCREW HEAD TAP M3.5X10
100	Z0450011220CL	§ MOTORIZED STIRRER DISPENSER From pos. 9 to pos. 25

www.rheavendors.com tel: 0039 02 966 551 fax: 0039 02 96 55 086 email: rheavendors@rheavendors.com exclusive property of rheavendors group

motorized stirrer dispenser (2 TURRETS)

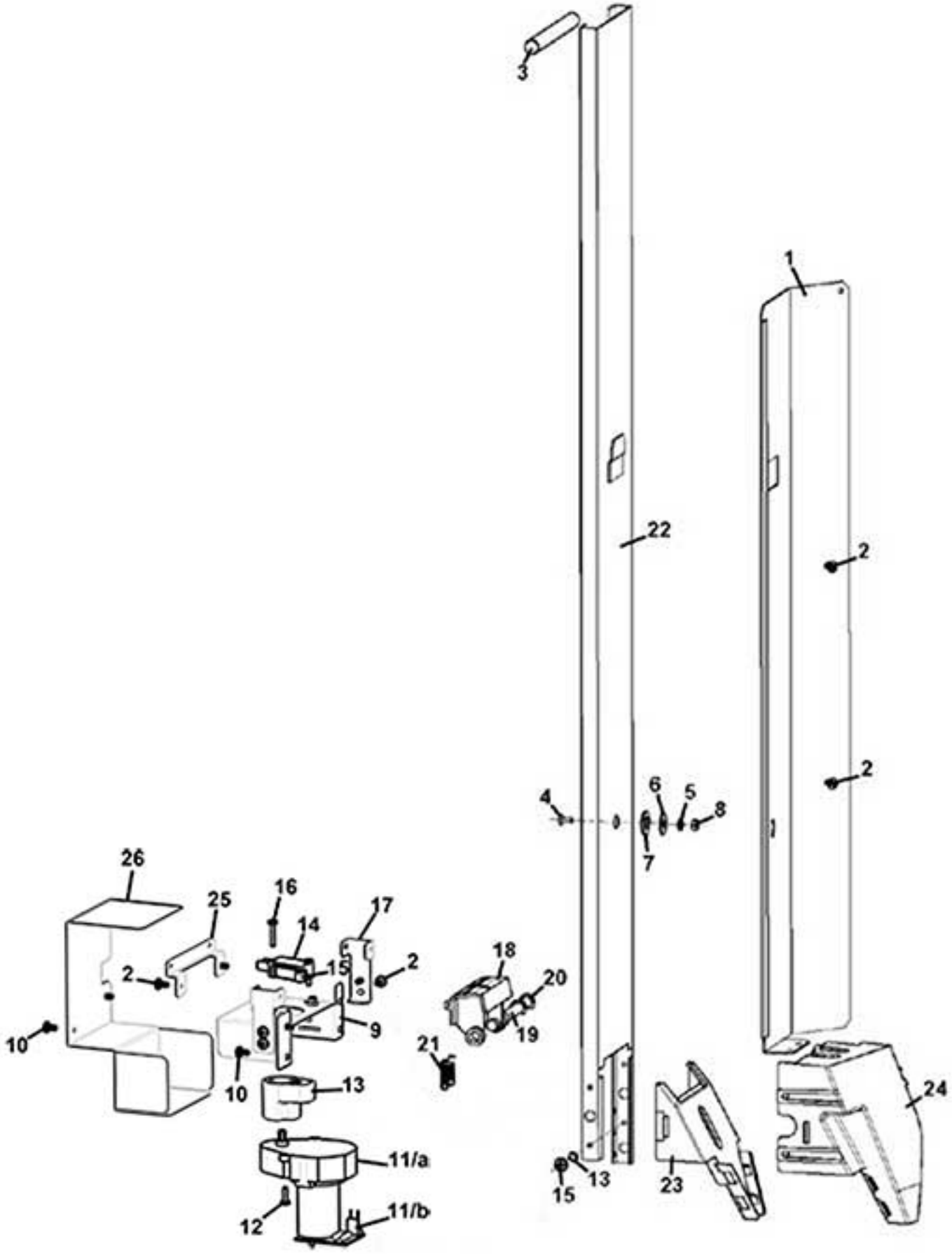

www.rheavendors.com tel: 0039 02 966 551 fax: 0039 02 96 55 086 email: rheavendors@rheavendors.com exclusive property of rheavendors group

motorized stirrer dispenser (2 TURRETS)		
Pos.	**Code**	**Description**
1	Z0020038403	STIRRER DISPENSER SUPPORT
2	VIT0002009	SCREW ST HEAD CAP M3.5X6.5
3	4001012030	STIRRER WEIGHT 89MM
4	VIT0000107	SCREW COUNT FLAT HEAD M4X10
5	VIT0003103	SPRING WASHER 4,3
6	VIT0003302	WASHER 5,5X15X1,6
7	VIT0003006	WASHER 8,4X17X1,6
8	VIT0004503	NUT M4
9	Z0450011272	MOTOR SUPPORT
10	VIT0002401	SCREW ST HEAD CAP M3.5X9.5
11	Z0090002196R	§ GEAR MOTOR 18RPM+FILTER
11/a	Z0090002196	GEAR MOTOR 18RPM 24V DC
11/b	SCH0003740	MOTOR FILTER
12	VIT0000004	SCREW HEAD TAP CAP M3X10
13	Z0450011274NA	STIRRER EJECTOR CAM
14	ELE0001528	MICROSWITCH
15	ELE0001906	MICROSWITCH LEVER
16	VIT0000006	SCREW HEAD TAP CAP M3X16
17	Z0450011275	EJECTOR STOP
18	Z0450002003	STIRRER EJECTOR
19	Z0450003008	STICKS DISPENSER PIN 89 mm
20	VIT0006504	RING 5
21	Z0450003010	SPRING
22	Z0450011135-02	STIRRER CONTAINER MM.89
23	Z0450011132CW	STIRRER CHUTE (TRAFFIC GREY RA
24	Z0450011134CW	STIRRER CHUTE COVER RAL7043
25	Z0450011276	SPRING PLATE
26	Z0450011277	STIRRER EJECTOR COVER
100	Z0450011220CL	§ MOTORIZED STIRRER DISPENSER Froom pos.9 to pos.26

www.rheavendors.com tel: 0039 02 966 551 fax: 0039 02 96 55 086 email: rheavendors@rheavendors.com exclusive property of rheavendors group

stirrer dispenser (1 TURRET)

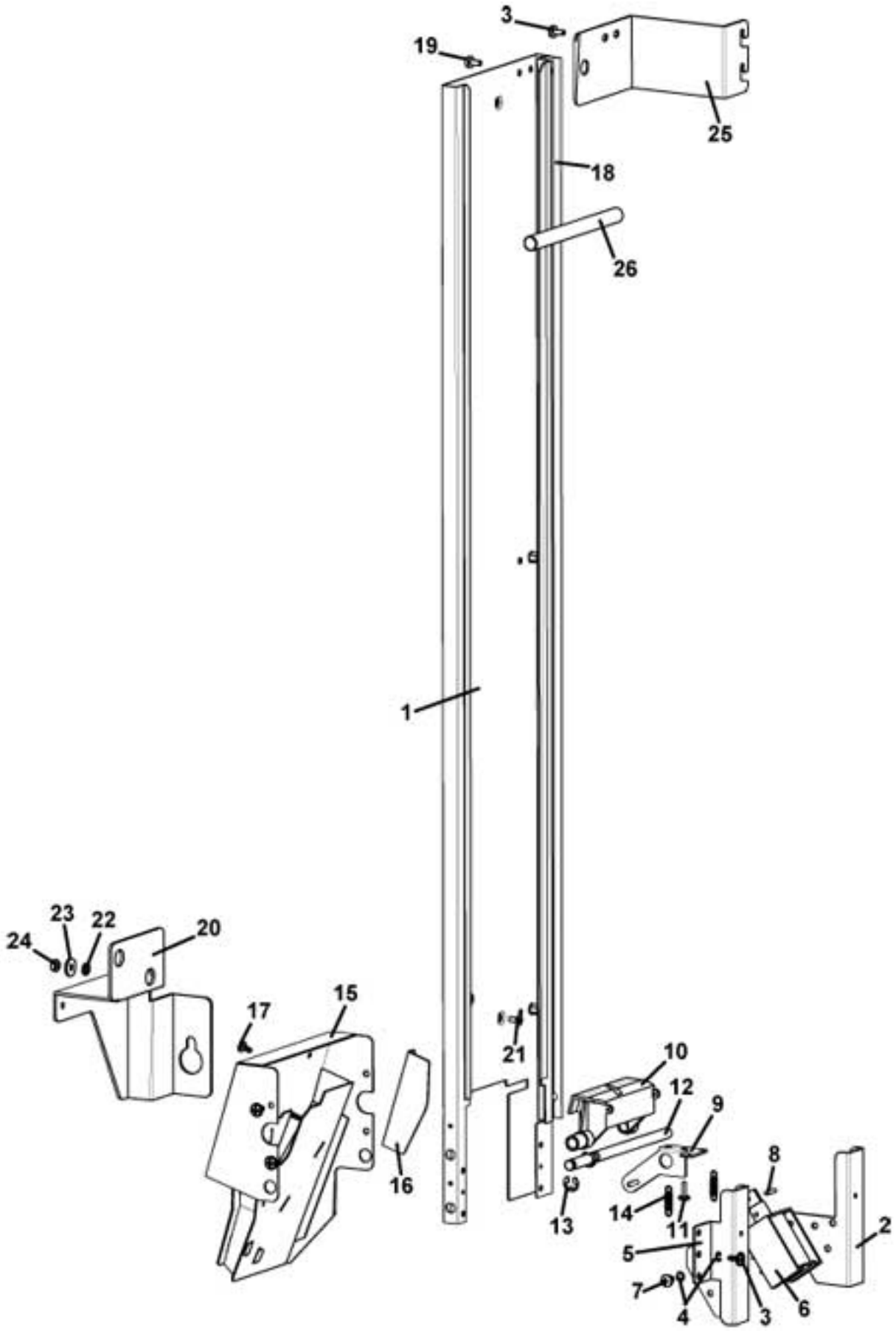

www.rheavendors.com tel: 0039 02 966 551 fax: 0039 02 96 55 086 email: rheavendors@rheavendors.com exclusive property of rheavendors group

stirrer dispenser (1 TURRET)		
Pos.	**Code**	**Description**
1	Z0450011056	STIRRERS CONTAINER
2	Z0450011063	ELECTROMAGNET RIGHT SUPPORT
3	VIT0002401	SCREW ST HEAD CAP M3.5X9.5
4	VIT0003405	SPRING WASHER 4,3
5	Z0450011064	ELECTROMAGNET LEFT SUPPORT
6	ELE0000055	ELECTROMAGNET 5% 24V DC
7	VIT0000021	SCREW HEAD TAP CAP M4X6
8	VIT0005211	DOWEL PIN 2.5X12
9	Z0450011065	STIRRER EJECTOR CONNECTING ROD
10	Z0450002003	STIRRER EJECTOR
11	VIT0002469	SCREW HEAD TAP M3.5X10
12	Z0450011066	STIRRER EJECTOR PIN
13	VIT0006515	RING 5
14	Z0450003010	SPRING
15	Z0450011106	STIRRER FUNNEL
16	Z0450011112	INTERNAL WALL
17	VIT0002009	SCREW ST HEAD CAP M3.5X6.5
18	Z0450011057	STIRRER CONTAINER GUIDE
19	VIT0000030	SCREW HEAD TAP CAP M4X7
20/a	Z0020038123	TURRET RIGHT SUPPORT W/STIRRER
20/b	Z0020038191	R.H. TURRET SUPPORT CUP 80 For version with cups Ø80
21	VIT0000107	SCREW COUNT FLAT HEAD M4X10
22	VIT0003103	SPRING WASHER 4,3
23	VIT0003302	WASHER 5,5X15X1,6
24	VIT0004503	NUT M4
25	Z0020038166	STIRRERS REINFORCEMENT
26/a	4001012030	STIRRER WEIGHT 89MM
26/b	Z0450003033	STIRRER WEIGHT 104MM
100	Z0450011100CL	§ STIRRER DISPENSER 89 From pos. 1 to pos. 19
101	Z0450011101CL	§ STIRRER DISPENSER 104 From pos.1 to pos. 19 (excluded pos. 16 and 17)

www.rheavendors.com tel: 0039 02 966 551 fax: 0039 02 96 55 086 email: rheavendors@rheavendors.com exclusive property of rheavendors group

solubles dispenser E

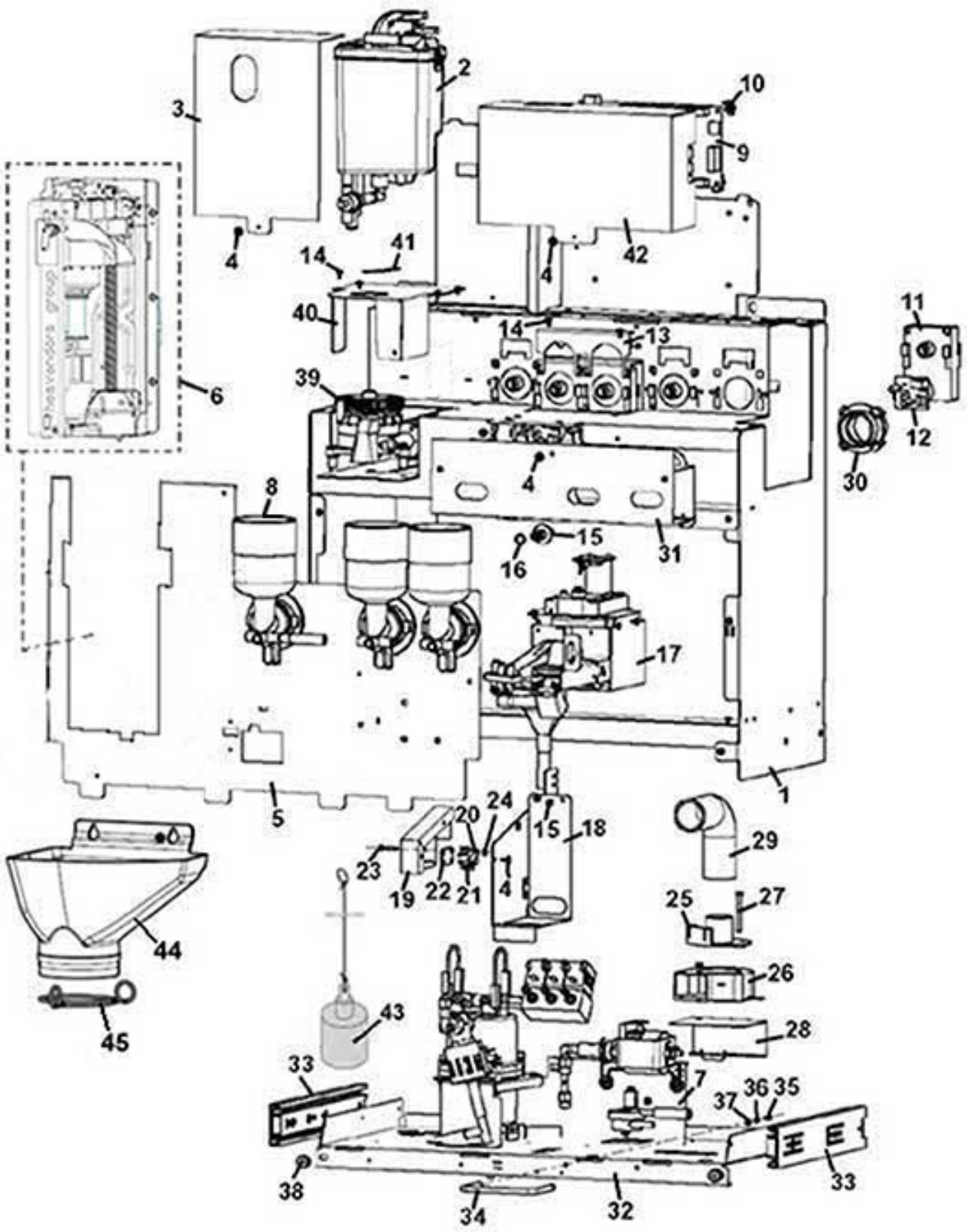

www.rheavendors.com tel: 0039 02 966 551 fax: 0039 02 96 55 086 email: rheavendors@rheavendors.com exclusive property of rheavendors group

solubles dispenser E		
Pos.	**Code**	**Description**
1		COMPONENT NO MORE SELLING
2		See table water inlet panel
3	Z0070015117	AIR BREAK COVER
4	VIT0002401	SCREW ST HEAD CAP M3.5X9.5
5		COMPONENT NO MORE SELLING
6		See table PRO BREWER SUPPORT+MOTOR
7		See table ESPRESSO boiler support
8		See table mixer
9	BRD03002	2M FS COFFEE BREWER BOARD
10	ELE0062008	BOARD SUPPORT
11	Z0090002113R	§ GEARBOX MOTOR 24V DC+FILTER
12	SCH0003760	MOTOR FILTER
13	Z0070015524	PRODUCT MOTORS STOPPER
14	VIT0002009	SCREW ST HEAD CAP M3.5X6.5
15/a	Z0080100123PL	MIXER CONNECTOR D.2 BLUE
15/b	Z0080100123MD	MIXER CONNECTOR D.2 GREEN
15/c	Z0080100123IC	MIXER CONNECTOR D.2 ORANGE
16	GUA0000085	OR 106 RED SILICONE A70
17/a		See table "E" distribution pipes movement (1 TURRET)
17/b		See table "E"distribution pipes movement (2 TURRETS)
18	Z0070015145	PIPE GUIDE
19	Z0070015146	MICRO SWITCH PROTECTION
20	ELE0001528	MICROSWITCH
21	NL201106265	MICRO LEVER
22	4600010014	SPACER
23	VIT0000006	SCREW HEAD TAP CAP M3X16
24	VIT0004701	NUT M3
25	Z0010014071	TRAP CONNECTOR
26	ELE0000465R	§ TRAP 24V DC
27	VIT0000235	SCREW HEX HEAD M4X40
28	Z0070015142	FAN SUPPORT
29	TEOL000002	EXTRACTOR TUBE D.30
30	Z0070020019CY	EXTRATOR TUBE SUPPORT
31		COMPONENT NO MORE SELLING
32		COMPONENT NO MORE SELLING
33	Z0070015144	TELESCOPICS GUIDE
34	Z0070015143	BOTTOM EXTRACTABLE HANDLE
35	VIT0000030	SCREW HEAD TAP CAP M4X7
36	VIT0003103	SPRING WASHER 4,3
37	VIT0004503	NUT M4
38	Z0180012157	SCREW
39		
40	Z0070020317	CANISTER SUPPORT
41	Z0320004729	GRINDER REGULATION LABEL
42	Z0070016229	BOARD COVER
43	Z0070020038CL1	§ WASTE FLOAT
44	Z0070015151NA	GROUNDS CONTAINER

www.rheavendors.com tel: 0039 02 966 551 fax: 0039 02 96 55 086 email: rheavendors@rheavendors.com exclusive property of rheavendors group

solubles dispenser E		
45	Z0070015149	GROUNDS BAG FIXING SPRING

www.rheavendors.com tel: 0039 02 966 551 fax: 0039 02 96 55 086 email: rheavendors@rheavendors.com exclusive property of rheavendors group

mixer

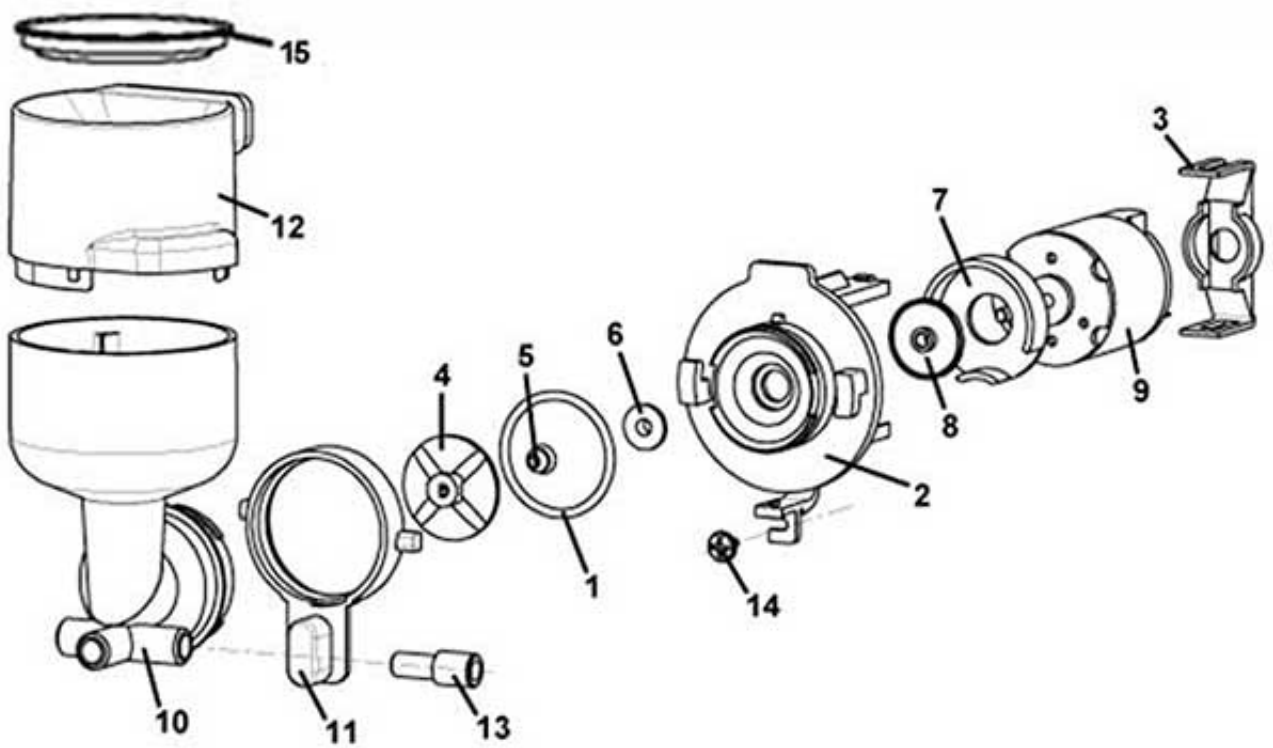

www.rheavendors.com tel: 0039 02 966 551 fax: 0039 02 96 55 086 email: rheavendors@rheavendors.com exclusive property of rheavendors group

mixer		
Pos.	**Code**	**Description**
1	GUA0000084	OR 3131 RED SILICONE A60
2	Z0080100005	MOTOR MIXER BASE
3	Z0080100009IC	MIXER MOTOR SUPPORT RAL2011
4	Z0080100011	MIXER FAN
5	Z0080100102	MIXER SHAFT GASKET
6	Z0080100015	MIXER BUSH
7	Z0080100023IC	MIXER COVER RAL2011
8	Z0080100024	MIXER FAN
9	Z0090003023	MIXER MOTOR 24V DC SHAFT D.4
10_1/a	Z0080200104L	MIXING BOWL L.W/O H20 BREAKER
10_1/b	Z0080200105R	MIXING BOWL R.W/O H20 BREAKER
10_1/c	Z0080200106C	MIXING BOWL F.W/O H20 BREAKER
10_2/a	Z0080200101L	MIXING BOWL L.W/H20 BREAKER
10_2/b	Z0080200102R	MIXING BOWL R.W/H20 BREAKER
10_2/c	Z0080200103C	MIXING BOWL F.W/H20 BREAKER
11	Z0080100006IC	LOCK RING RAL2011
12	Z0080100131NA	MIXING BOWL EXTRACTOR BLACK
13/a	Z0080100095	TUBE REDUCER D.4
13/b	Z0080100096	COFFEE OUTLET REDUCTION D.2
14	VIT0002401	SCREW ST HEAD CAP M3.5X9.5
15	Z0080100022	MIXING BOWL RING
100	Z0080100001R	§ MIXER BOWL BASE+MOTOR (from pos.1 to pos.9)

www.rheavendors.com tel: 0039 02 966 551 fax: 0039 02 96 55 086 email: rheavendors@rheavendors.com exclusive property of rheavendors group

ADDITIONAL GEAR MOTOR SUPPORT

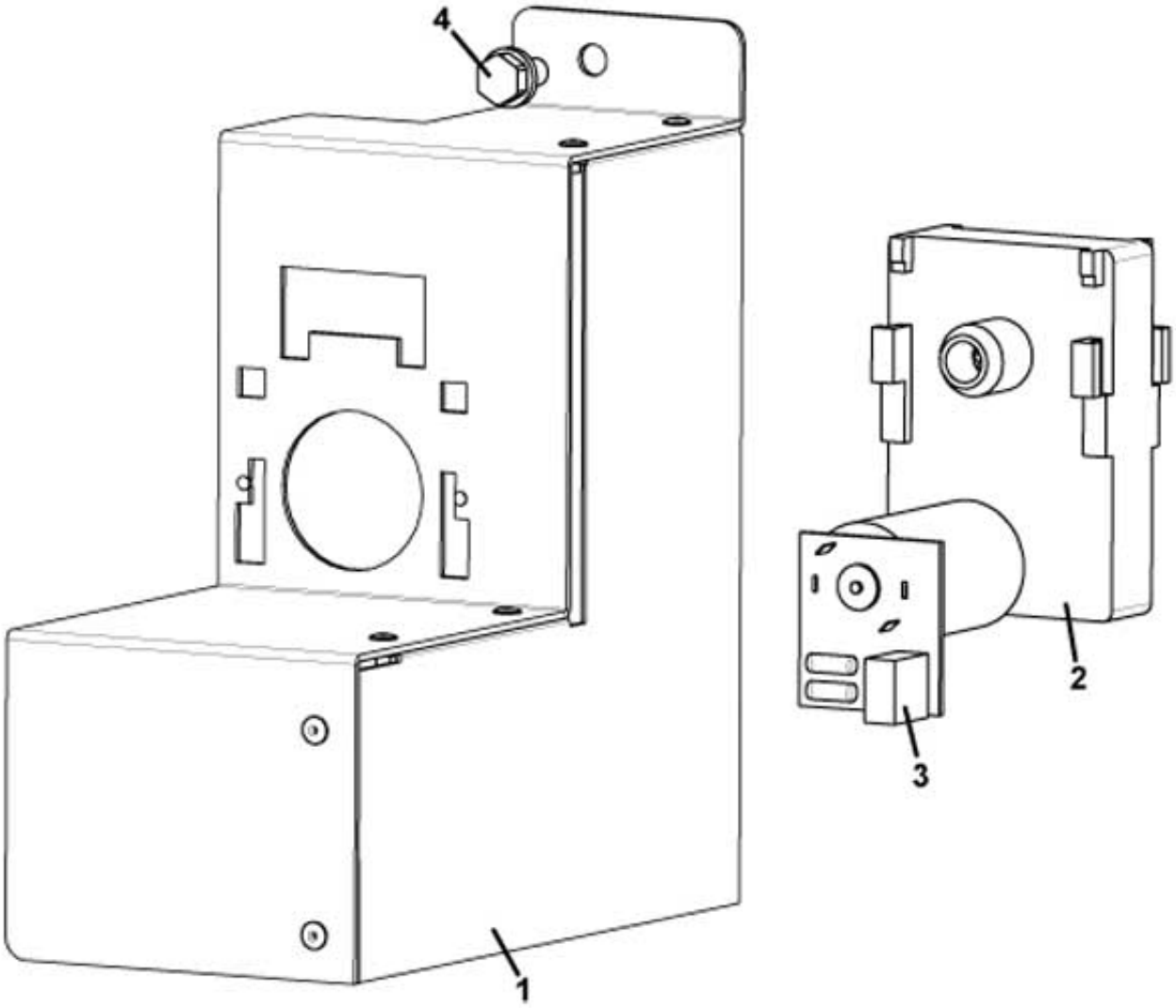

www.rheavendors.com tel: 0039 02 966 551 fax: 0039 02 96 55 086 email: rheavendors@rheavendors.com exclusive property of rheavendors group

ADDITIONAL GEAR MOTOR SUPPORT		
Pos.	**Code**	**Description**
1/a	Z0070014680	GEARBOX MOTOR SUPPORT E5 For the E7 version (2 TURRETS)
1/b	Z0070015521	ADDITIONAL MOTOR COVER For the E6 version (1TURRET)
2	Z0090002113	MOTOR 24 DC 97 RPM
3	SCH0003760	MOTOR FILTER
4	VIT0000236	SCREW HEX HEAD M6X11

www.rheavendors.com tel: 0039 02 966 551 fax: 0039 02 96 55 086 email: rheavendors@rheavendors.com exclusive property of rheavendors group

water inlet panel

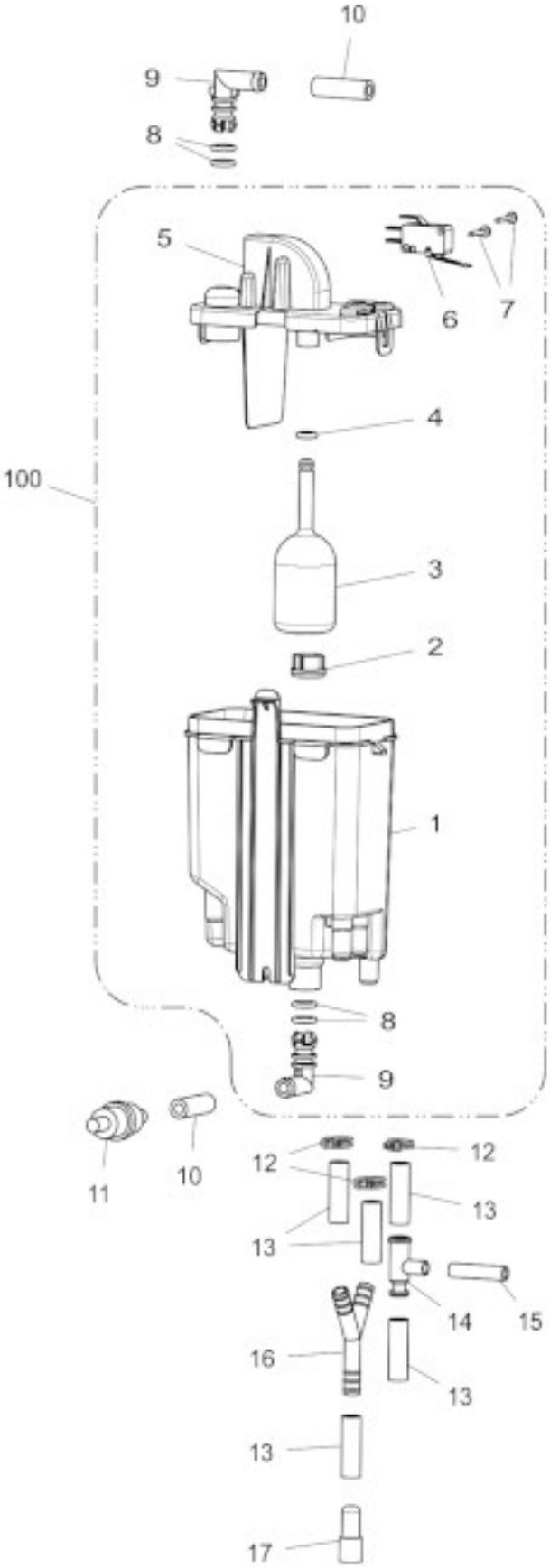

www.rheavendors.com tel: 0039 02 966 551 fax: 0039 02 96 55 086 email: rheavendors@rheavendors.com exclusive property of rheavendors group

water inlet panel		
Pos.	**Code**	**Description**
1	Z0800013041	AIR BREAK TANK
1	Z0800013041	AIR BREAK TANK
2	Z0110020007	PLASTIC FILTER DIAM. 20
3	Z0800013046	AIR BREAK WASTE FLOAT
4	GUA0000082	SILICON GASKET D.6
5	Z0800013043	AIR BREAK COVER
6	ELE0001514	MICROSWITCH 3A 125-250VA
7	VIT0002013	SCREW ST HEAD CAP M2.9X19
8	GUA0000043	OR 109 NBR AL 75 BLACK
9	Z0800009211	ELBOW CONNECTOR
10/a	TSIL06/11T-10	SILICON HOSE 6X11 MT.10
10/b	TSIL06/11T-50	SILICON HOSE 6X11 MT.50
11	Z0109002002	H2O FILTER
12	FASC000109	CLAMP
13/a	TSIL07/11T-10	SILICON HOSE 7X11 MT.10
13/b	TSIL07/11T-50	SILICON HOSE 7X11 MT.50
14	Z0600016028	T CONNECTOR
15/a	TSIL05/08T-10	SILICON HOSE 5X8 MT.10
15/b	TSIL05/08T-50	SILICON HOSE 5X8 MT.50
16	Z0100001065	CONNECTOR "Y"
17	650001057	DRAINER PLUG
100	Z0800014001R	§ AIR BREAK FS

www.rheavendors.com tel: 0039 02 966 551 fax: 0039 02 96 55 086 email: rheavendors@rheavendors.com exclusive property of rheavendors group

PRO BREWER SUPPORT+MOTOR

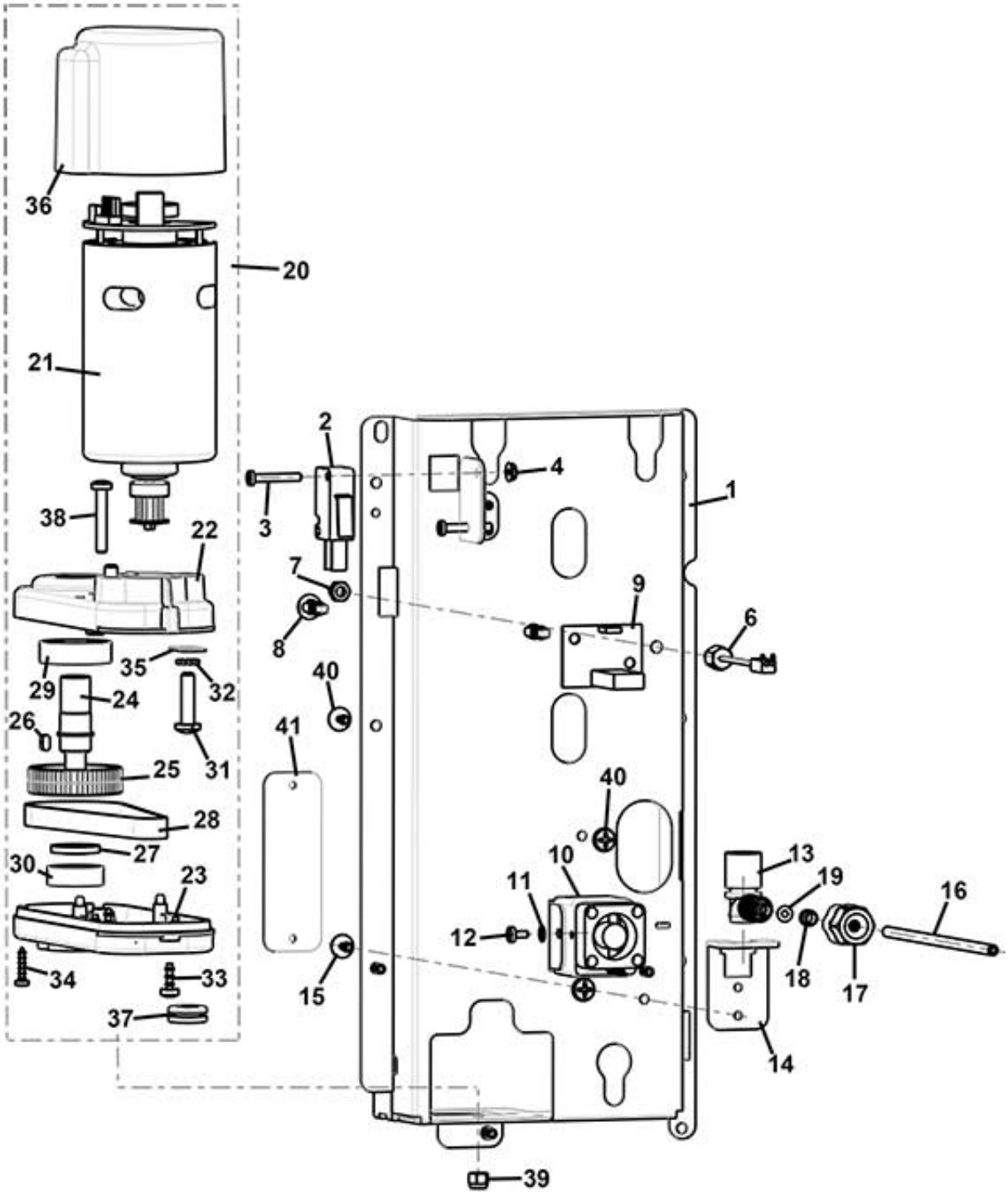

www.rheavendors.com tel: 0039 02 966 551 fax: 0039 02 96 55 086 email: rheavendors@rheavendors.com exclusive property of rheavendors group

PRO BREWER SUPPORT+MOTOR		
Pos.	**Code**	**Description**
1	Z0260014042	VARIFLEX BREWER SUPPORT
2	ELE0001522	MICROSWITCH
3	VIT0000006	SCREW HEAD TAP CAP M3X16
4	VIT0004701	NUT M3
6	ELE0000931	PROBE NTC 10K/TE
7	VIT0004803	NUT M4
8	ELE0062020	BOARD SUPPORT
9		Heater board sold with code ELE0000467-02
10	ELE0000467-02	FAN HEATER 24V DC + BOARD
11	VIT0003102	SPRING WASHER 3,2
12	VIT0000002	SCREW HEAD TAP CAP M3X6
13	Z0250014084-02	FEMALE CONNECTOR
14	Z0260014009-01	H2O CONNECTOR SUPPORT
15	VIT0002009	SCREW ST HEAD CAP M3.5X6.5
16	TTEF02/04T	PTFE PIPE 2X4
17	Z0250014086	NUT
18	Z0100002014	LOCKING RING SO1-4
19	GUA0000061	OR 2010 VITON 80 BLACK
20	Z0090002250R	§ VARIFLEX BREW. GEARBOX MOTOR From pos. 21 to pos. 37 (new version components)
21	Z0090002252-01	§ MOTOR 24V DC New version
22	Z0090002222NA	MOTOR UPPER CASE RAL9005 New version
23	Z0090002223NA	MOTOR LOWER CASE RAL9005 New version
24	Z0090002224	FEMALE CONNECTOR SHAFT
25/a	Z0090002255AN	PULLEY New version from serial 20154600000
25/b		For machine built before Serial n. 20154599999 pls order motor Z0090002250R
26	VIT0006703	CLAMP
27	Z0090002226	SPACER
28/a	Z0090002258	BELT New version from serial 20154600000
28/b		For machine built before Serial n. 20154599999 pls order motor Z0090002250R
29	VIT0009324	BEARING
30	VIT0009320	BEARING
31	VIT0000017	SCREW HEAD TAP CAP M5X20
32	VIT0003104	SPRING WASHER 5,3
33	VIT0002469	SCREW HEAD TAP M3.5X10
34	VIT0002014	SCREW ST HEAD CAP M2.9X13
35	Z0090002240	MOTOR SPACER
36	Z0090002235CK	MR GV BOARD COVER R.7037
37	GUA0010501	ELECTRICAL GROMMET DG 7,5
38	VIT0000015	SCREW HEAD TAP CAP M4X25
39	VIT0004815	NUT M4
40	VIT0002401	SCREW ST HEAD CAP M3.5X9.5
41		PARTS NO MORE AVAILABLE
100	Z0250014086R	§ WATER INLET TUBE 0,15 mt From pos. 16 to pos. 19
101	Z0090002224R	§ FEMALE CONNECTOR SHAFT From pos.24 to pos.30 excluded pos.28

www.rheavendors.com tel: 0039 02 966 551 fax: 0039 02 96 55 086 email: rheavendors@rheavendors.com exclusive property of rheavendors group

ESPRESSO boiler support

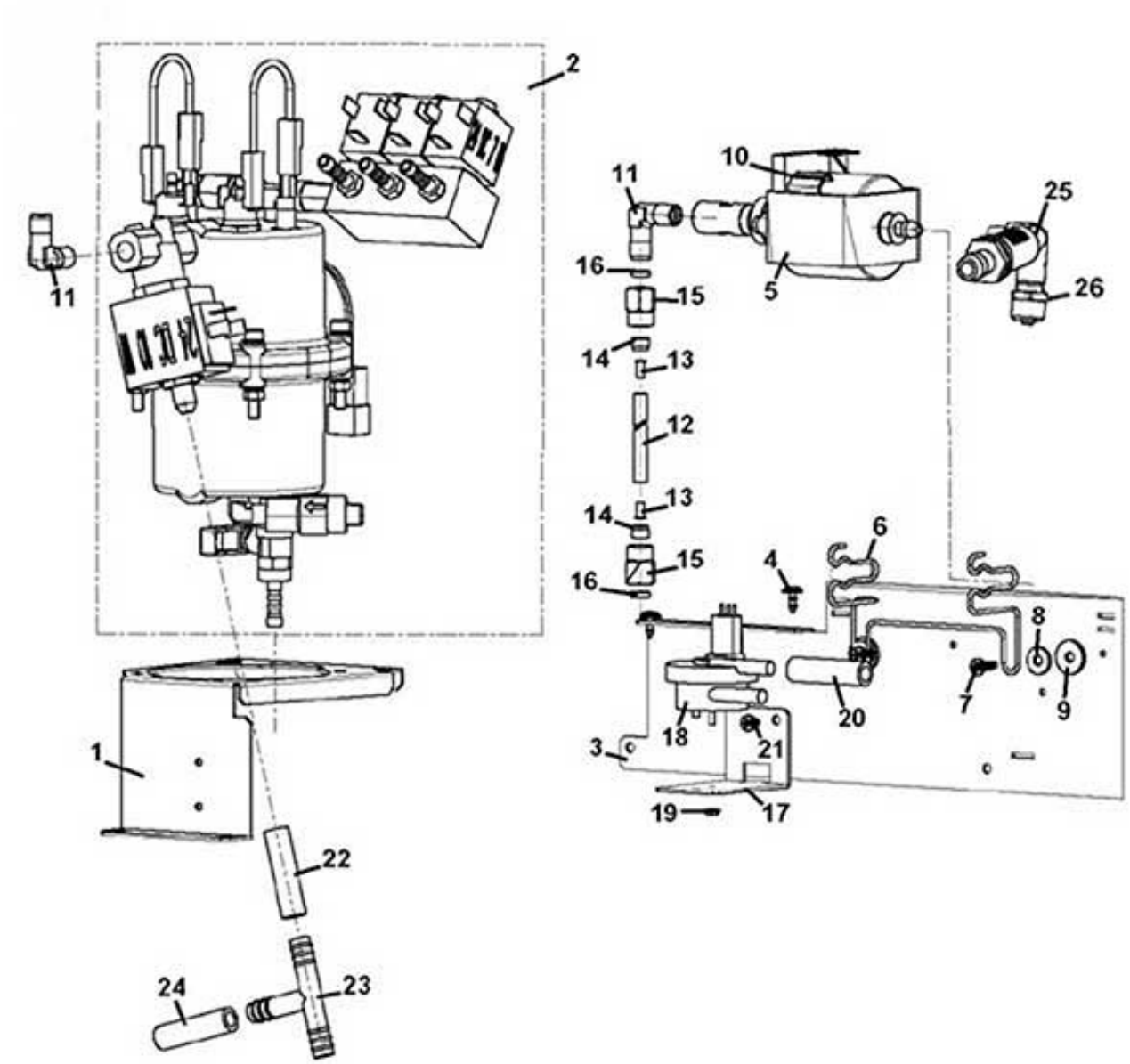

www.rheavendors.com tel: 0039 02 966 551 fax: 0039 02 96 55 086 email: rheavendors@rheavendors.com exclusive property of rheavendors group

ESPRESSO boiler support		
Pos.	**Code**	**Description**
1	Z0070016241	INOX BOILER SUPPORT
2		
3	Z0070016221	PUMP SUPPORT
4	VIT0002009	SCREW ST HEAD CAP M3.5X6.5
5	Z0110004041	PUMP EX5 230V-50HZ
6	Z0110004038	PUMP SUPPORT
7	VIT0002004	SCREW ST HEAD CAP M3.5X13
8	VIT0003301	WASHER 4,3X12X1,5
9	1600001098	RUBBER SPACER D. 4,5
10	ELE0000915	PUMP THERMOPROTECTOR
11	Z0100001019	ELBOW CONNECTOR SO2400-6-1/8
12/a	TTEF04/06T-10	
12/b	TTEF04/06T-50	
13	Z0100002005	NUT D.4
14	Z0100002002	LOCKING RING SO1-6
15	Z0100001002	CONNECTOR NUT
16	Z0100003002	COPPER GASKET SO5-5-1/8
17	Z0070016224	VOLUMETRIC COUNTER SUPPORT
18	Z0110007003	VOLUMETRIC COUNTER
19	VIT0004701	NUT M3
20/a	TSIL05/08T-10	SILICON HOSE 5X8 MT.10
20/b	TSIL05/08T-50	SILICON HOSE 5X8 MT.50
21	VIT0002009	SCREW ST HEAD CAP M3.5X6.5
22/a	TSIL06/11T-10	SILICON HOSE 6X11 MT.10
22/b	TSIL06/11T-50	SILICON HOSE 6X11 MT.50
23	Z0100003022	T CONNECTOR 461 TS UL
24/a	TSIL07/11T-10	SILICON HOSE 7X11 MT.10
24/b	TSIL07/11T-50	SILICON HOSE 7X11 MT.50
25	Z0110004070	BY PASS VALVE 11 BAR
26	Z0100001007	STRAIGHT CONNECT SO30-1/8-1/8

www.rheavendors.com tel: 0039 02 966 551 fax: 0039 02 96 55 086 email: rheavendors@rheavendors.com exclusive property of rheavendors group

ESPRESSO BOILER STAINLESS STEEL 400CC

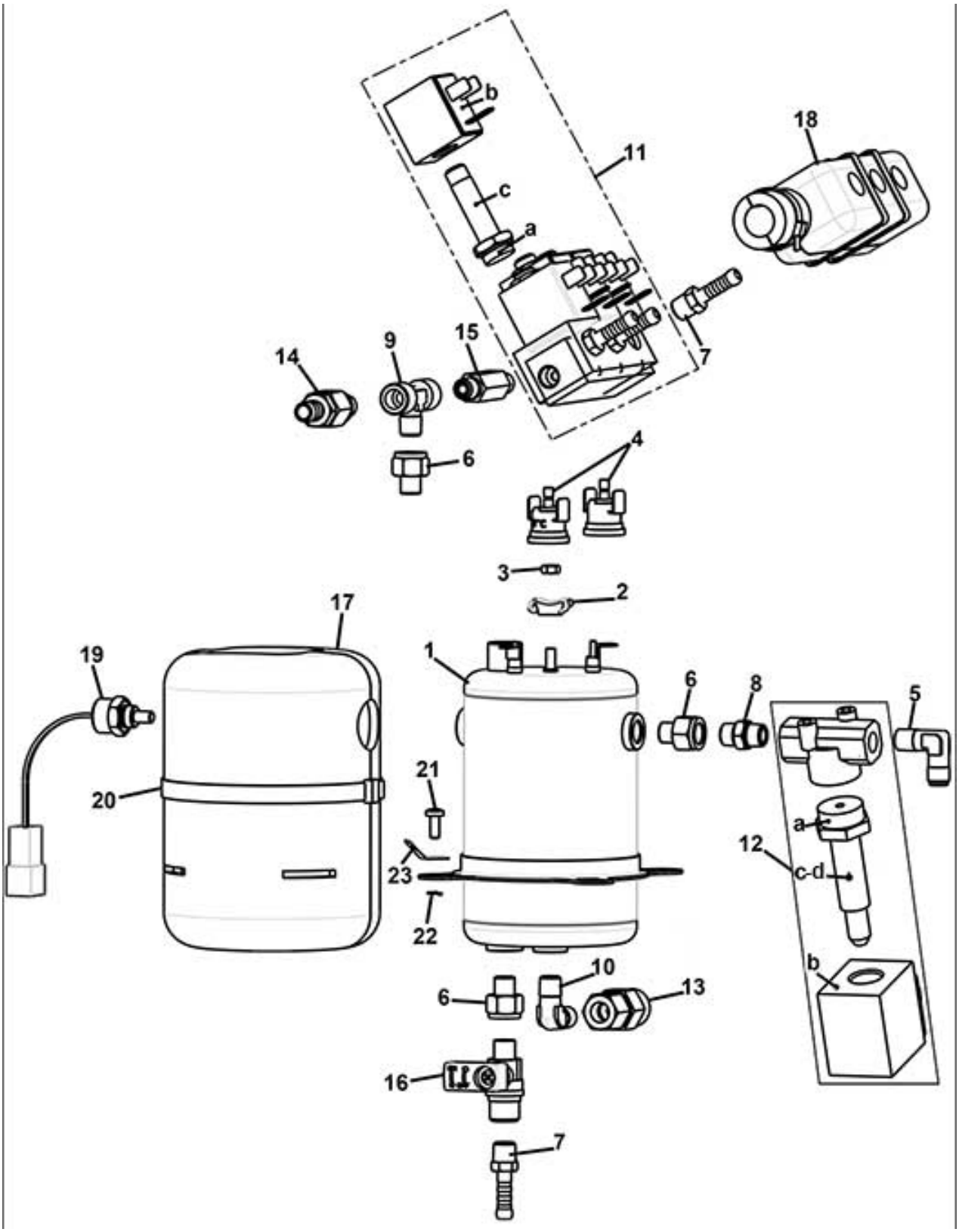

www.rheavendors.com tel: 0039 02 966 551 fax: 0039 02 96 55 086 email: rheavendors@rheavendors.com exclusive property of rheavendors group

ESPRESSO BOILER STAINLESS STEEL 400CC		
Pos.	**Code**	**Description**
1	Z0600019701CL	§ BOILER 1500 W 230V 400 CC Pos.1+4 from serial 20180400000
2	Z0600019188	THERMOSTAT CLIP
3	VIT0004826	NUT M4X0,7
4	ELE0000982	CLIXSON 127°
5	Z0100001019	ELBOW CONNECTOR SO2400-6-1/8
6	Z0100001067	CONNECTOR SO40-1/8-1/8
7	Z0100001082	RUBBER HOLDER D.7-GC 1/8
8	Z0100001084	NIPPLE 1/8
9	Z0100001087	T CONNECTOR 1/8
10	Z0100001110	ELBOW CONNECTOR 6-1/8
11_1	Z0110001117	VALVE BLOCK 3V 2W 24V DC 7W
11_1/a	Z0110010138	SLEEVE D.13,9+WHITE OR
11_1/a	Z0110010148	SLEEVE D.14,9+GREEN OR
11_1/b	Z0110010135	COIL 7W 24V DC
11_1/c	Z0110010136	CORE+SPRING
11_2	Z0110001117	VALVE BLOCK 3V 2W 24V DC 7W
11_2/a		COMPONENT NO MORE SOLD
11_2/b	Z0110010145	COIL 6W 24V DC 70%
11_2/c		PARTS NO MORE AVAILABLE
12_1	Z0110001072	VALVE 3W 1/8 24DC O
12_1/a		
12_1/b	Z0110010065	COIL 8 W 24 DC
12_1/c		COMPONENT NO MORE SELLING
13	Z0110002012R	§ SAFETY VALVE E:1/8M O:1/8F
14	Z0110002013	SAFETY VALVE 1/8M D.9
15	Z0110001220	STRAIGHT CONNECTOR MM 1/8 GC
16	Z0600019017	TAP M/F 1/8
17	Z0600019195	INSULATION SHELL
18	Z0600019196	EV HOUSING INSULATION
19	ELE0000975	PROBE
20	FASC000214	PLASTIC CLIP BLACK 7,8X365
100	KITCAF0089	UPGRADE KIT BOILER STAIN.STEEL Completed with the new support Up to serial 20180399999
101	Z0600019791CL	§ STAINLESS STEEL BOILER 400CC From pos. 1 to pos. 31 from serial 20180400000

www.rheavendors.com tel: 0039 02 966 551 fax: 0039 02 96 55 086 email: rheavendors@rheavendors.com exclusive property of rheavendors group

800 CC ESPRESSO BOILER

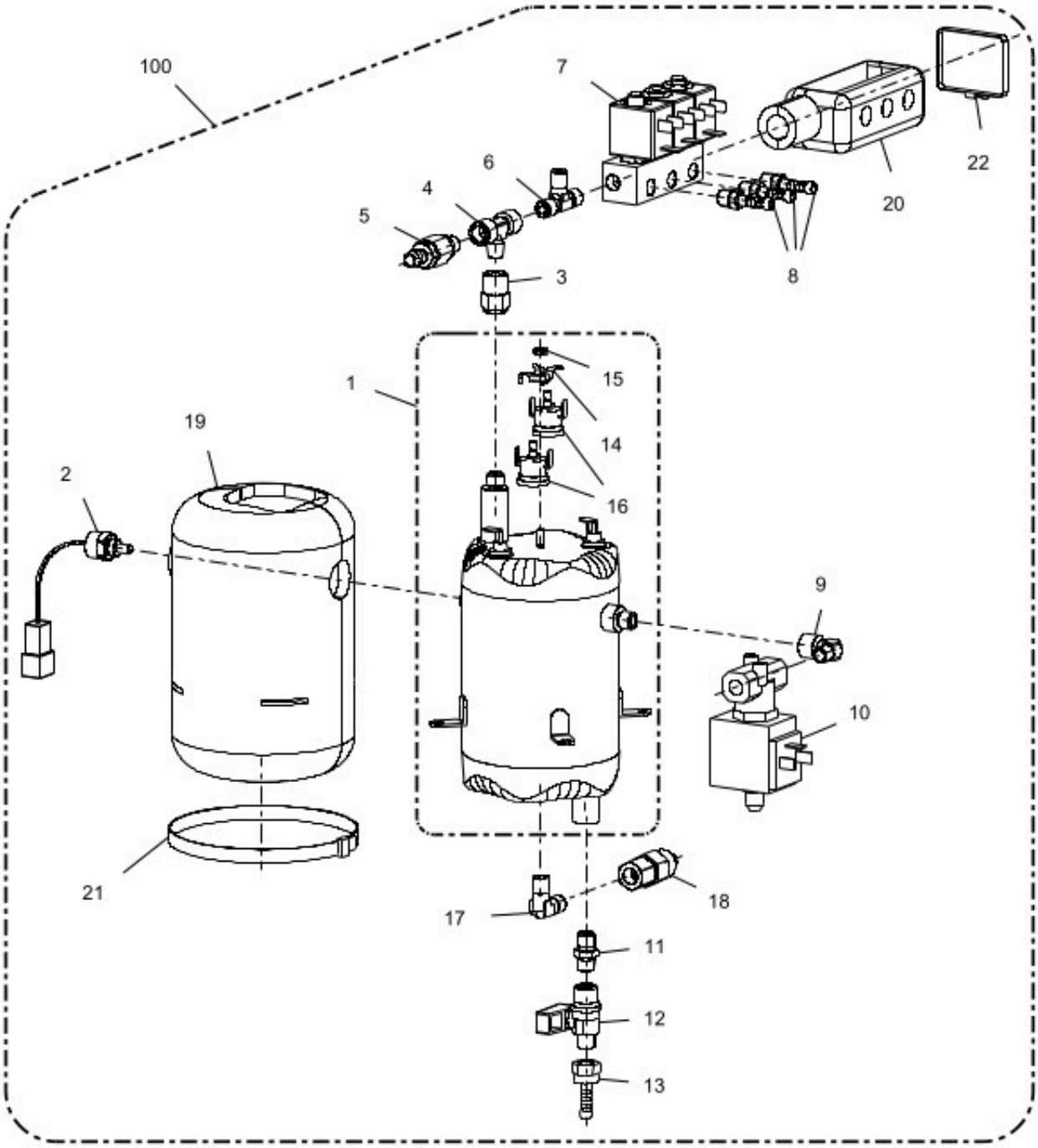

www.rheavendors.com tel: 0039 02 966 551 fax: 0039 02 96 55 086 email: rheavendors@rheavendors.com exclusive property of rheavendors group

800 CC ESPRESSO BOILER		
Pos.	**Code**	**Description**
1	Z0600019703CL	§ PRESS.BOIL.800CC 2000W 230V
2	ELE0000975	PROBE
3	Z0100001007	STRAIGHT CONNECT SO30-1/8-1/8
4	Z0100001087	T CONNECTOR 1/8
5	Z0110002015	SAFETY VALVE 1/8M D.9
6	Z0100001030	T CONNECTOR SO3700-6-1/8-6
7	Z0110001117	VALVE BLOCK 3V 2W 24V DC 7W
8	Z0100001082	RUBBER HOLDER D.7-GC 1/8
9	Z0100001085	ELBOW CONNECTOR
10	Z0110001122	VALVE 3W 1/8 24V DC
11	Z0100001017	STRAIGHT CONNECT SO1100-6-1/8
12	Z0600019017	TAP M/F 1/8
13	Z0100001090	ELECTRICAL GROMMET D.7-1/8
14	Z0600019188	THERMOSTAT CLIP
15	VIT0004803	NUT M4
16	ELE0000982	CLIXSON 127°
17	Z0600019116	ELBOW M 1/8
18	Z0110002012R	§ SAFETY VALVE E:1/8M O:1/8F
19	Z0600019198	800CC BOILER HOUSING INSULAT.
20	Z0600019196	EV HOUSING INSULATION
21	FASC000214	PLASTIC CLIP BLACK 7,8X365
22	FASC000215	PLASTIC CLIP BLACK 2,6X200
100	Z0600019752CL	§ BOILER 230V800CC+3EV+EV

www.rheavendors.com tel: 0039 02 966 551 fax: 0039 02 96 55 086 email: rheavendors@rheavendors.com exclusive property of rheavendors group

800 CC BOILER SUPPORT W/ROTATIVE PUMP

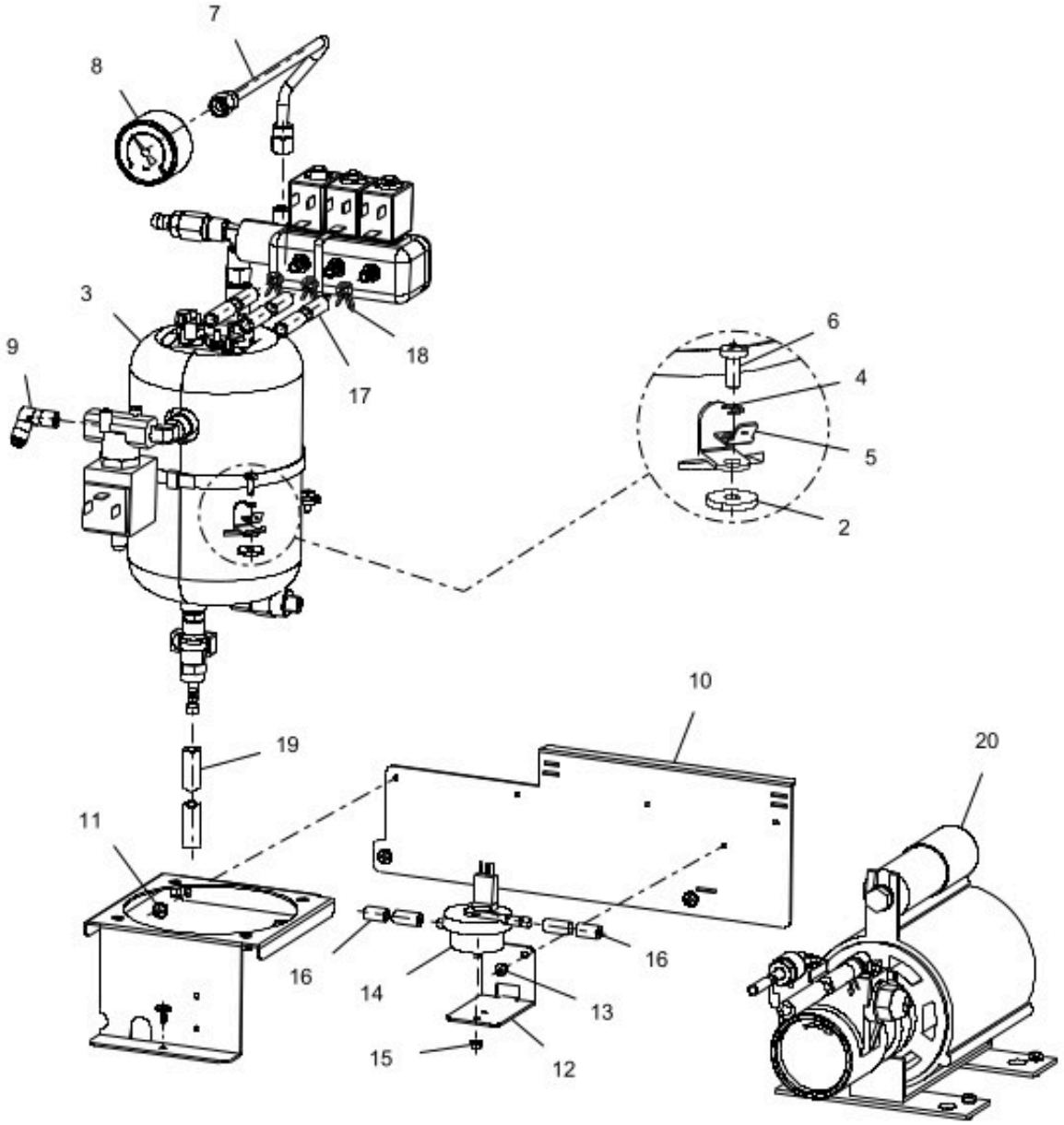

www.rheavendors.com tel: 0039 02 966 551 fax: 0039 02 96 55 086 email: rheavendors@rheavendors.com exclusive property of rheavendors group

800 CC BOILER SUPPORT W/ROTATIVE PUMP		
Pos.	**Code**	**Description**
1	Z0070016226	INOX BOILER SUPPORT
2	1600001098	RUBBER SPACER D. 4,5
3		See table 800 CC ESPRESSO BOILER
4	VIT0003405	SPRING WASHER 4,3
5	Z0600019012	GROUND WIRING
6	VIT0000012	SCREW HEAD TAP CAP M4X10
7	Z0600019216CL	§PRESSURE GAUGE CONNECT TUBE
8	Z0110006003	MANOMETER
9	Z0100001019	ELBOW CONNECTOR SO2400-6-1/8
10	Z0070016228	PUMP SUPPORT
11	VIT0002401	SCREW ST HEAD CAP M3.5X9.5
12	Z0070016224	VOLUMETRIC COUNTER SUPPORT
13	VIT0002009	SCREW ST HEAD CAP M3.5X6.5
14	Z0110007003	VOLUMETRIC COUNTER
15	VIT0004701	NUT M3
16/a	TSIL05/08T-10	SILICON HOSE 5X8 MT.10
16/b	TSIL05/08T-50	SILICON HOSE 5X8 MT.50
17/a	TSIL06/09T-10	SILICON HOSE 6X9 MT.10
17/b	TSIL06/09T-50	SILICON HOSE 6X9 MT.50
18	FASC000112	TUBE FIXING CLIP
19/a	TSIL07/11T-10	SILICON HOSE 7X11 MT.10
19/b	TSIL07/11T-50	SILICON HOSE 7X11 MT.50
20		See table ROTATIVE PUMP

www.rheavendors.com tel: 0039 02 966 551 fax: 0039 02 96 55 086 email: rheavendors@rheavendors.com exclusive property of rheavendors group

ROTATIVE PUMP

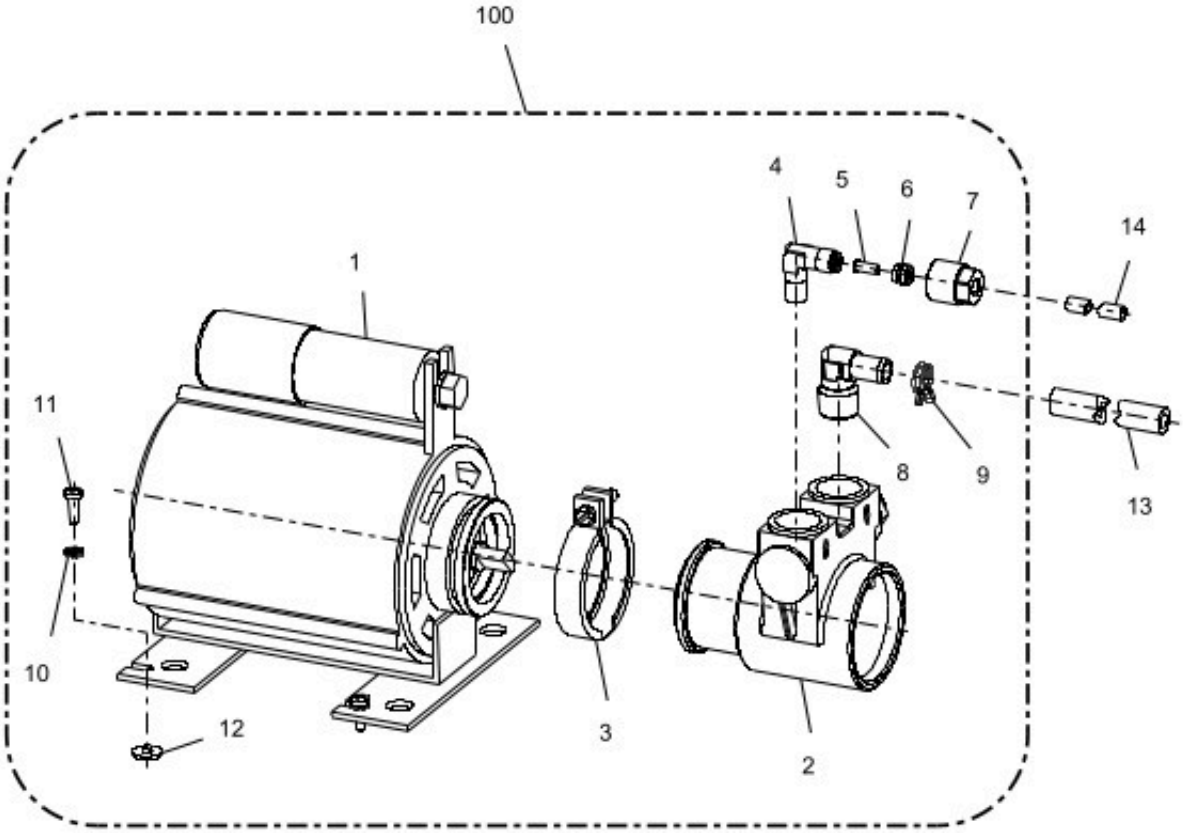

www.rheavendors.com tel: 0039 02 966 551 fax: 0039 02 96 55 086 email: rheavendors@rheavendors.com exclusive property of rheavendors group

ROTATIVE PUMP		
Pos.	**Code**	**Description**
1	Z0099003002	MOTOR 120W 230V 50 HZ 4P
2	Z0110004033	PROCON PUMP MOD.13BB015F116A
3	Z0110004033/1	V BAND CLAMP SLOTTED HEAD
4	Z0100001022	ELBOW CONNECTOR 8-3/8-1/4
5	Z0100002005	NUT D.4
6	Z0100002002	LOCKING RING SO1-6
7	Z0100001003	TAP CONNECTOR SO20-6-1/4
8	Z0100003013	ELBOW CONNECTOR
9	FASC000101	CLAMP
10	VIT0003103	SPRING WASHER 4,3
11	VIT0000013	SCREW HEAD TAP CAP M4X12
12	VIT0003301	WASHER 4,3X12X1,5
13/a	TSIL06/11T-10	SILICON HOSE 6X11 MT.10
13/b	TSIL06/11T-50	SILICON HOSE 6X11 MT.50
14	TTEF04/06T	PTFE PIPE 4X6
100	Z0110004033R2	§ROTARY PUMP + ENGINE

www.rheavendors.com tel: 0039 02 966 551 fax: 0039 02 96 55 086 email: rheavendors@rheavendors.com exclusive property of rheavendors group

800 CC BOILER SUPPORT W/VIBRATION PUMP

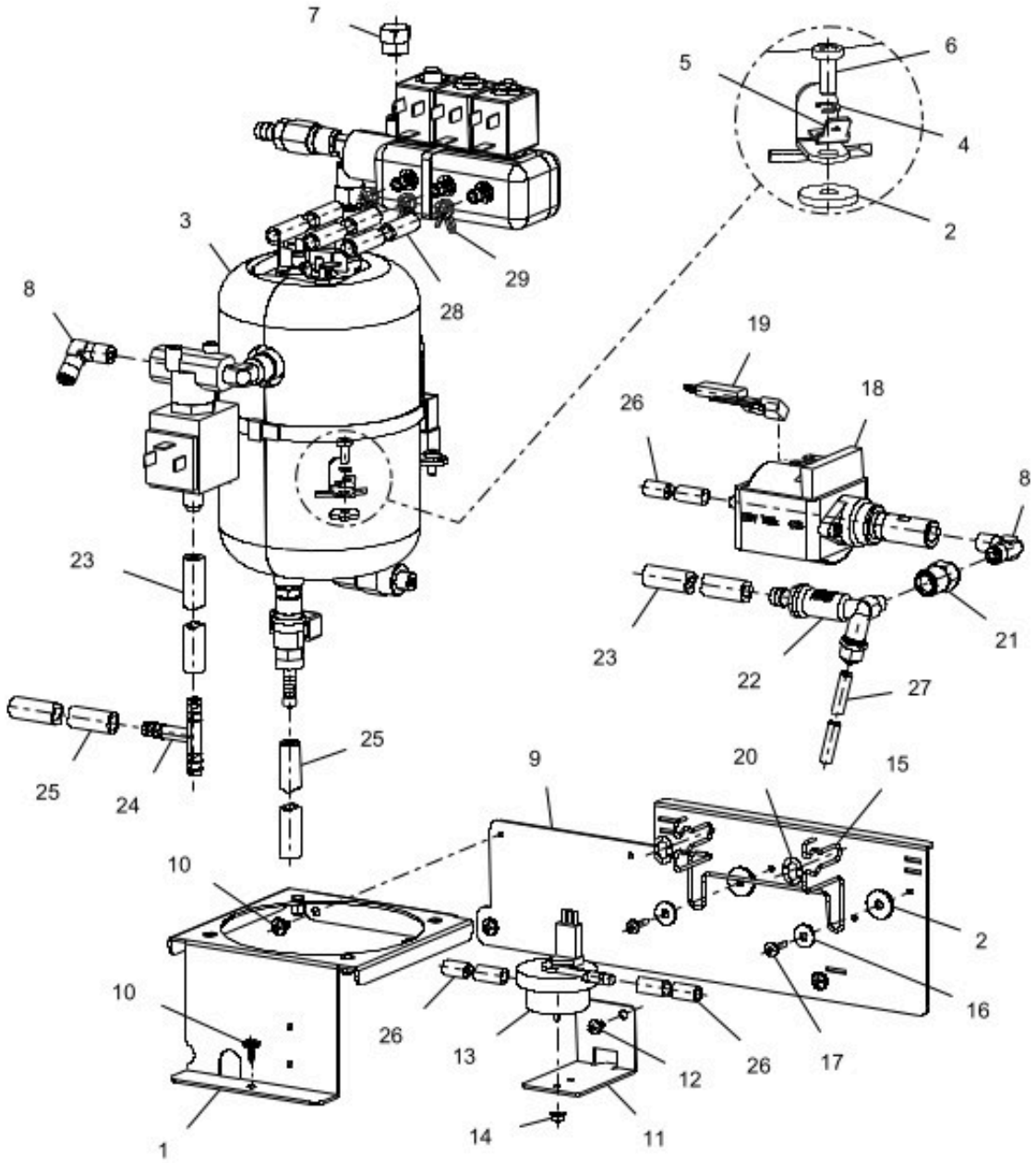

www.rheavendors.com tel: 0039 02 966 551 fax: 0039 02 96 55 086 email: rheavendors@rheavendors.com exclusive property of rheavendors group

800 CC BOILER SUPPORT W/VIBRATION PUMP		
Pos.	**Code**	**Description**
1	Z0070016226	INOX BOILER SUPPORT
2	1600001098	RUBBER SPACER D. 4,5
3		See table 800 CC ESPRESSO BOILER
4	VIT0003405	SPRING WASHER 4,3
5	Z0600019012	GROUND WIRING
6	VIT0000012	SCREW HEAD TAP CAP M4X10
7	Z0110004089	PLUG
8	Z0100001019	ELBOW CONNECTOR SO2400-6-1/8
9	Z0070016228	PUMP SUPPORT
10	VIT0002401	SCREW ST HEAD CAP M3.5X9.5
11	Z0070015141	VOLUMETRIC COUNTER SUPPORT
12	VIT0002009	SCREW ST HEAD CAP M3.5X6.5
13	Z0110007003	VOLUMETRIC COUNTER
14	VIT0004701	NUT M3
15	Z0110004038	PUMP SUPPORT
16	VIT0003301	WASHER 4,3X12X1,5
17	VIT0002004	SCREW ST HEAD CAP M3.5X13
18	Z0110004041	PUMP EX5 230V-50HZ
19	ELE0000915	PUMP THERMOPROTECTOR
20	GUA0000043	OR 109 NBR AL 75 BLACK
21	Z0100001007	STRAIGHT CONNECT SO30-1/8-1/8
22	Z0110004070	BY PASS VALVE 11 BAR
23/a	TSIL06/11T-10	SILICON HOSE 6X11 MT.10
23/b	TSIL06/11T-50	SILICON HOSE 6X11 MT.50
24	Z0100003022	T CONNECTOR 461 TS UL
25/a	TSIL07/11T-10	SILICON HOSE 7X11 MT.10
25/b	TSIL07/11T-50	SILICON HOSE 7X11 MT.50
26/a	TSIL05/08T-10	SILICON HOSE 5X8 MT.10
26/b	TSIL05/08T-50	SILICON HOSE 5X8 MT.50
27	TTEF04/06T	PTFE PIPE 4X6
28/a	TSIL06/09T-10	SILICON HOSE 6X9 MT.10
28/b	TSIL06/09T-50	SILICON HOSE 6X9 MT.50
29	FASC000102	CLAMP

www.rheavendors.com tel: 0039 02 966 551 fax: 0039 02 96 55 086 email: rheavendors@rheavendors.com exclusive property of rheavendors group

800 CC BOILER RELE

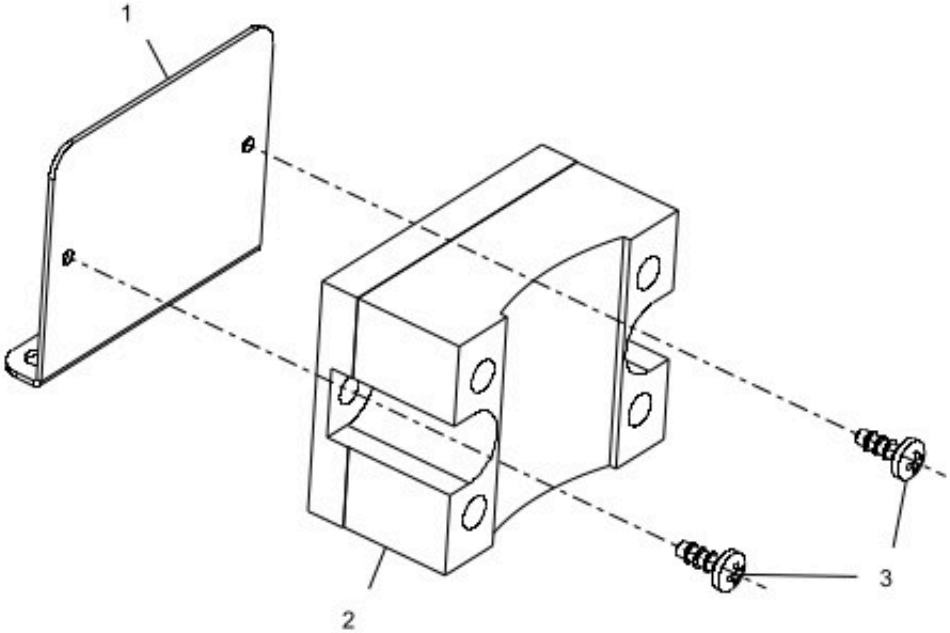

www.rheavendors.com tel: 0039 02 966 551 fax: 0039 02 96 55 086 email: rheavendors@rheavendors.com exclusive property of rheavendors group

800 CC BOILER RELE		
Pos.	**Code**	**Description**
1	Z0070016232	SOLID STATE RELAY SUPPORT
2	ELE0001012	RELAY
3	VIT0002010	SCREW ST HEAD CAP M3.5X9.5

www.rheavendors.com tel: 0039 02 966 551 fax: 0039 02 96 55 086 email: rheavendors@rheavendors.com exclusive property of rheavendors group

"E" distribution pipes movement (1 TURRET)

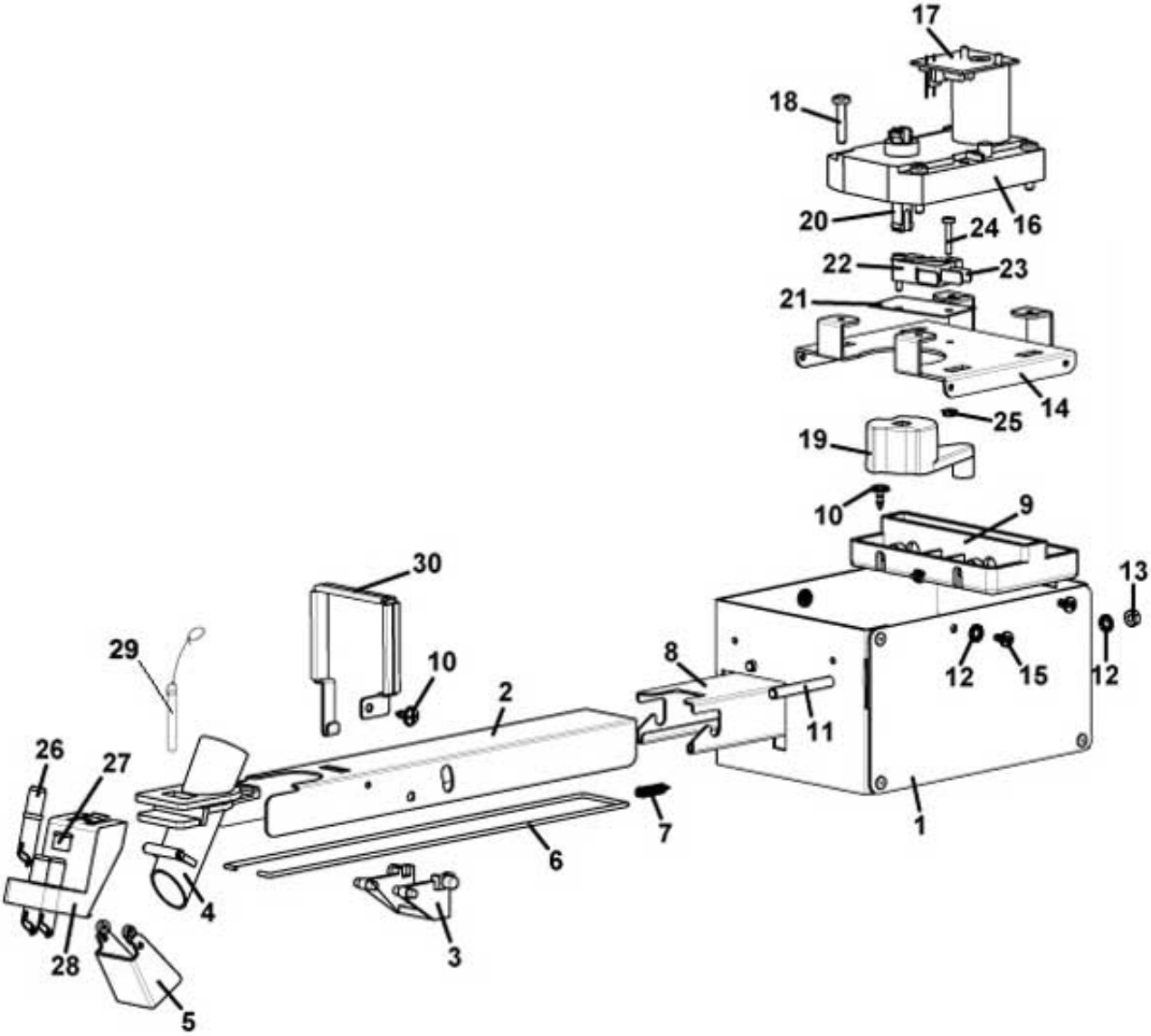

www.rheavendors.com tel: 0039 02 966 551 fax: 0039 02 96 55 086 email: rheavendors@rheavendors.com exclusive property of rheavendors group

"E" distribution pipes movement (1 TURRET)		
Pos.	**Code**	**Description**
1	Z0380010805	PIPE MOVEMENT HOUSING
2	Z0380010815	NOZZLE HOLDER
3	Z0380010599	NOZZLE MOVEMENT BUTTON
4	Z0380011229NA	SUGAR CHUTE
5	Z0380010424NA	SUGAR SPLITTER
6	Z0380010813	BRACKET
7	Z0380010431	SPRING
8	Z0380010683	PIPE SUPPORT GUIDE
9	Z0380010692	PIPE SUPPORT GUIDE
10	VIT0002004	SCREW ST HEAD CAP M3.5X13
11	Z0380010808	SHAFT
12	VIT0003103	SPRING WASHER 4,3
13	VIT0004503	NUT M4
14	Z0380010693	GEAR MOTOR SUPPORT
15	VIT0002009	SCREW ST HEAD CAP M3.5X6.5
16	Z0090002114R1	§ GEARBOX MOTOR 11RPM 24V DC
17	SCH0003740	MOTOR FILTER
18	VIT0000035	SCREW HEAD TAP CAP M4X20
19	Z0380010694	NOZZLE MOVEMENT CAM
20	Z0380010421	GEARBOX MOTOR SHAFT
21	7500902054	ISOLATION
22	ELE0001528	MICROSWITCH
23	ELE0001906	MICROSWITCH LEVER
24	VIT0000006	SCREW HEAD TAP CAP M3X16
25	VIT0004701	NUT M3
26	Z0380010657NA	ESPRESSO NOZZLE D. 5,7
27	Z0380010656NA	PLUG BLACK
28	Z0380010655NA/L	NOZZLES HOLDER
29	Z0380010429CL	§ FIXING PLATE PIN
30	Z0380010881	CLAMP
100	Z0380010801R	§ NOZZLE MOVEMENT From pos.1 to pos. 25

www.rheavendors.com tel: 0039 02 966 551 fax: 0039 02 96 55 086 email: rheavendors@rheavendors.com exclusive property of rheavendors group

"E"distribution pipes movement (2 TURRETS)

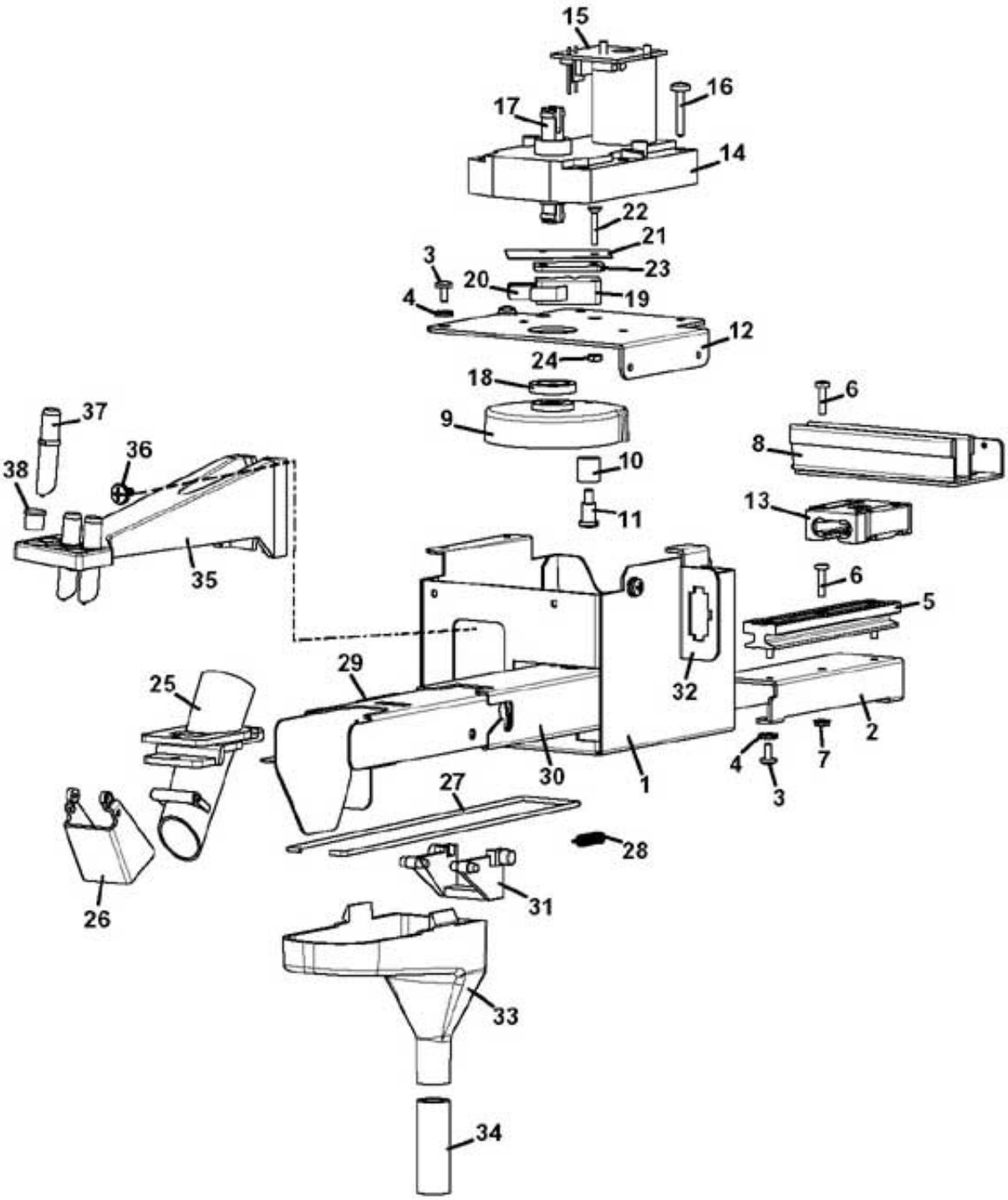

www.rheavendors.com tel: 0039 02 966 551 fax: 0039 02 96 55 086 email: rheavendors@rheavendors.com exclusive property of rheavendors group

"E"distribution pipes movement (2 TURRETS)		
Pos.	**Code**	**Description**
1	Z0380010916	PIPE MOVIMENT HOUSING
2	Z0380010932	GUIDE SUPPORT
3	VIT0002009	SCREW ST HEAD CAP M3.5X6.5
4	VIT0003103	SPRING WASHER 4,3
5	Z0380010933	PIPES MOVEMENT GUIDE RAIL
6	VIT0000005	SCREW HEAD TAP CAP M3X12
7	VIT0004701	NUT M3
8	Z0380010921	MOVEMENT PIPES GUIDE
9	Z0380010962R	SUGAR MOUVEMENT POSITION DISK
10	Z0200001011	BEARING
11	Z0200001012	PIN BEARING
12	Z0380010917	MOTOR SUPPORT
13	Z0380010798	NOZZLE MOVEMENT GUIDE
14	Z0090002114R1	§ GEARBOX MOTOR 11RPM 24V DC
15	SCH0003740	MOTOR FILTER
16	VIT0000035	SCREW HEAD TAP CAP M4X20
17	Z0380010421	GEARBOX MOTOR SHAFT
18	Z0380010831	BUSH 20x4
19	ELE0001522	MICROSWITCH
20	ELE0001906	MICROSWITCH LEVER
21	7500902054	ISOLATION
22	VIT0000104	M 3*16 TSP SCREW
23	4600010014	SPACER
24	VIT0004502	NUT M3
25	Z0380011229NA	SUGAR CHUTE
26	Z0380010424NA	SUGAR SPLITTER
27	Z0380010558	BRACKET
28	Z0380010431	SPRING
29	Z0380010970	SUPPORT
30	Z0380010931	DISPENSER MOVEMENT GUIDE
31	Z0380010599	NOZZLE MOVEMENT BUTTON
32	Z0070015130	PIPES MOVIMENT CONNECT SUPPORT
33	Z0400009507NA	DROPS CHUTE BLACK
34	TSIL10/14T	SILICON HOSE 10X14
35	Z0380010968NA	NOZZLES HOLDER BLACK
36	VIT0002401	SCREW ST HEAD CAP M3.5X9.5
37	Z0380010657NA	ESPRESSO NOZZLE D. 5,7
38	Z0380010656NA	PLUG BLACK
100	Z0380010910R	§ SUGAR DISPENSER 2T From pos.1 to pos. 32

www.rheavendors.com tel: 0039 02 966 551 fax: 0039 02 96 55 086 email: rheavendors@rheavendors.com exclusive property of rheavendors group

GRINDER

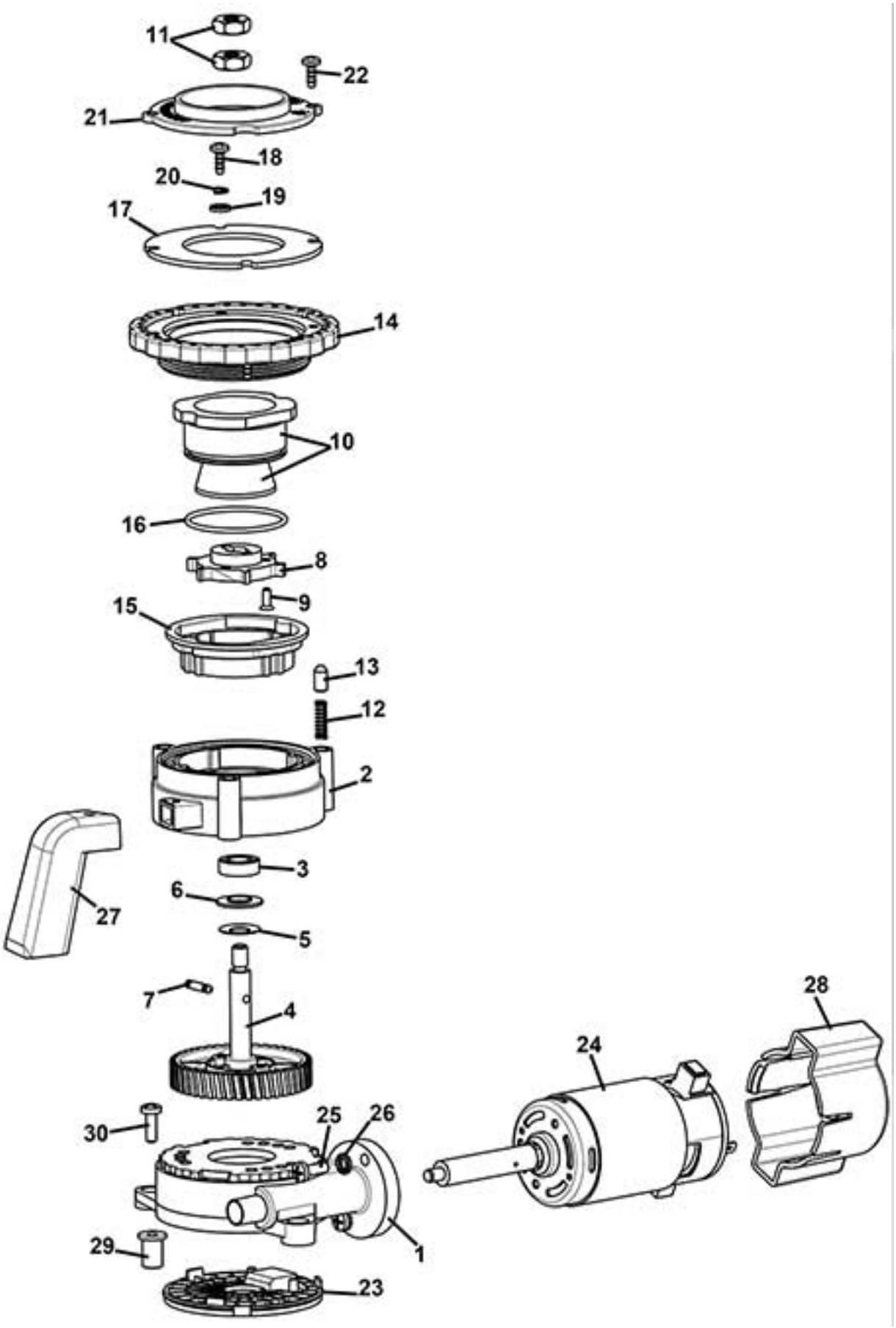

www.rheavendors.com tel: 0039 02 966 551 fax: 0039 02 96 55 086 email: rheavendors@rheavendors.com exclusive property of rheavendors group

GRINDER		
Pos.	**Code**	**Description**
1	Z0320001639NAR	§ MOTOR SUPPORT BLACK+PLUG
2	Z0320001602NAR	GRINDER BLADES SUPPORT
3	VIT0009325	BEARING
4	Z0320001608R	§ WHEEL+SHAFT+MAGNETS
5	Z0320001629	CUP SPRING 16x8,2 SP. 0,4
6	Z0320001625	BUSH
7	Z0320001704	GRINDER ROTATION PIN REINFORCE
8	Z0320001636	EJECTOR
9	VIT0000121	SCREW COUNT FLAT HEAD M3X8
10	Z0320001680	CONIC BLADES PLUS
11	Z0320001642	LOWER GRINDER FIXING NUT
12	Z0320001643	SPRING D.4X15X0,6
13	Z0320001624	REGULATION PIN
14	Z0320001605NAR	§ REGULATION RING NUT BLACK
15	Z0320001635-03NA	GRINDER SUPPORT BLACK
16	GUA0000124	SILICONE OR 2137
17	Z0320001622	UPPER GRINDER FIXING
18	VIT0002469	SCREW HEAD TAP M3.5X10
19	Z0320001666	SPACER D.4x7x2
20	VIT0003103	SPRING WASHER 4,3
21	Z0320001607NA	DUCT BLACK
22	VIT0002469	SCREW HEAD TAP M3.5X10
23	Z0320001604NA	PLUG BLACK
24	Z0090003047	GRINDER MOTOR 230V DC
25	VIT0000013	SCREW HEAD TAP CAP M4X12
26	VIT0003103	SPRING WASHER 4,3
27	Z0320001612NA	COFFEE POWDER CHUTE BLACK
28	Z0320001615NA	GRINDER SENSOR COVER BLACK
29	Z0320001628	NO-VIBRATION BUSH
30	VIT0000013	SCREW HEAD TAP CAP M4X12
100	Z0320001600CLAL	§ GRINDER PLUS-VARIFLEX BREWER From pos.1 to pos. 28
101	Z0320001600CLC1	§ GRINDER B PREGRINDED+CALIBRA From pos.1 to pos. 28

www.rheavendors.com tel: 0039 02 966 551 fax: 0039 02 96 55 086 email: rheavendors@rheavendors.com exclusive property of rheavendors group

PROFESSIONAL BREWER GROUP D.45

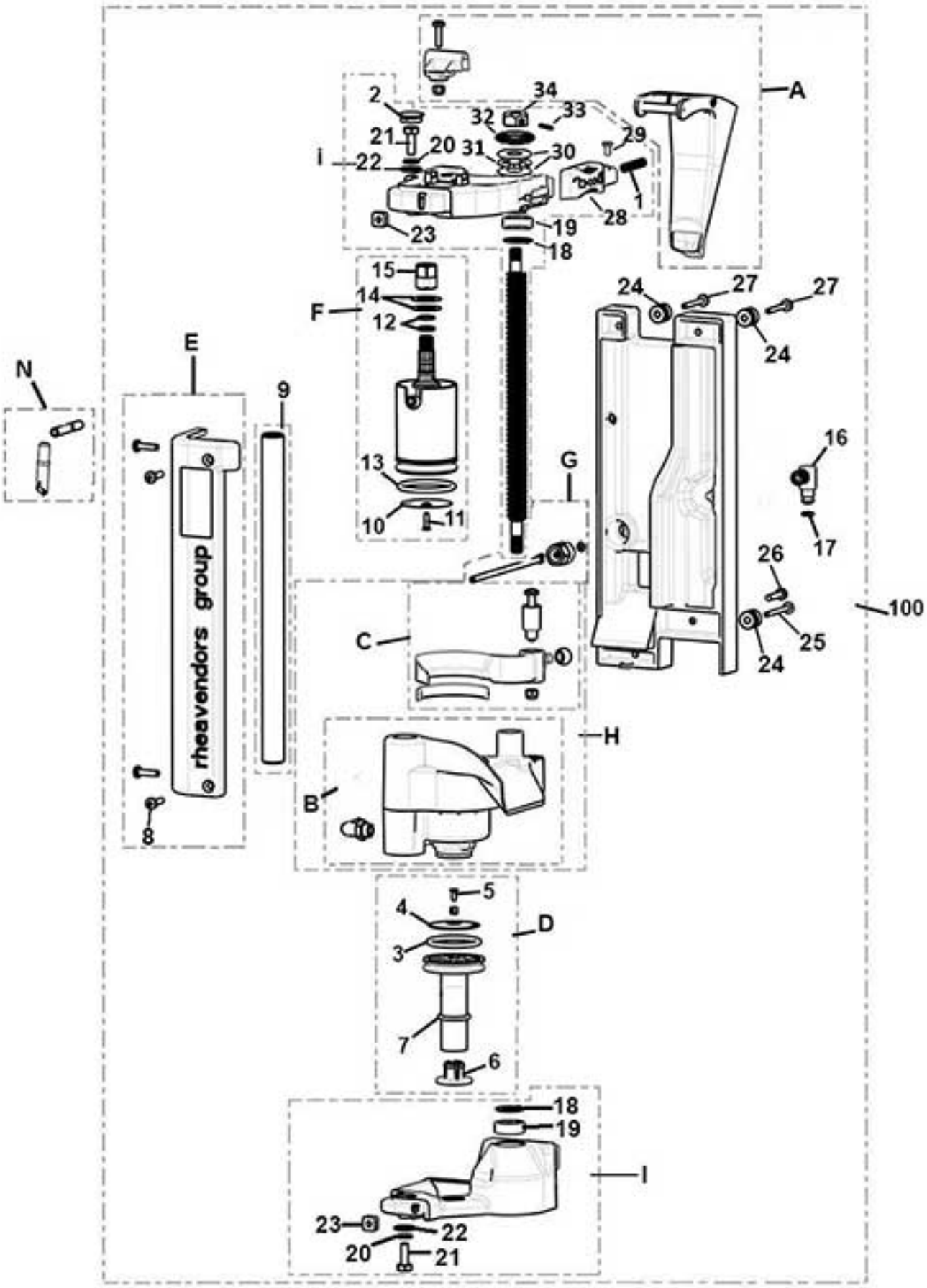

www.rheavendors.com tel: 0039 02 966 551 fax: 0039 02 96 55 086 email: rheavendors@rheavendors.com exclusive property of rheavendors group

PROFESSIONAL BREWER GROUP D.45		
Pos.	**Code**	**Description**
A	Z0250014008R	§ CHUTE D. 45
1	Z0250014081	SPRING
2	GUA0011022	PLUG
B	Z0250014022R	§ INFUSION CHAMBER D.45 included internal components and elbow
C	Z0250014024R	§ BRUSH D.45
D	Z0250014028R	§ LOWER FILTER HOLDER D.45
3	GUA0000097	OR 4131 RED SILICONE LSR70
4	Z0250014029	COFFEE FILTER DIAM. 37.3
5	VIT0000121	SCREW COUNT FLAT HEAD M3X8
6	Z0250014027R1	LOWER PISTON LOCK+SET SCREW
7	GUA0000103	OR 3075 SILICON
E	Z0250014019R	§ FRONTAL COVER
8	VIT0001009	SCREW HEAD TAP CAP M4X16
9	Z0250014013-04	CYLINDRICAL GUIDE
F	Z0250014045R	§ UPPER FILTER HOLDER D.45
10	Z0250008211	COFFEE FILTER 37,3
11	VIT0000129	SCREW COUNT HEAD M3X12
12	GUA0000045	OR 108 VITON 80 BLACK
13	GUA0000067	OR 4143 RED SILICONE LSR70
14	Z0250014048	SPRING
15	Z0250014086	NUT
16	Z0250014085	MALE CONNECTOR
17	GUA0000004	OR 104 NBR AL 75 BLACK
G	Z0250014086R	§ WATER INLET TUBE 0,15 mt
H	Z0250014020R	§ INFUSION CHAMBER D.45
I	Z0250014005R2	§UPPER SUPPORT WITHOUT CHUTE
L	Z0250014012R	§ LOWER SUPPORT
18	Z0250014077	SPACER
19	VIT0009320	BEARING
20	VIT0003113	SPRING WASHER 6,4
21	VIT0000249	SCREW HEX HEAD M6X16
22	Z0250014079	WASHER D.15 D.6,5 SP.1,5
23	VIT0009112	NUT M4
24	Z0250014072	PIN
25	VIT0000033	SCREW HEAD TAP CAP M4X35
26	VIT0001011	SCREW HEAD TAP CAP M4X20
27	VIT0001006	SCREW HEAD TAP CAP M4X30
28	Z0250014082	BREWER STOPPER BUTTON
29	VIT0002009	SCREW ST HEAD CAP M3.5X6.5
30	VIT0009318	SPACER WASHER
31	VIT0009317	BEARING
32	GUA0001007	V RING GASKET VA16
33	VIT0007011	SET SCREW 4X4
34	Z0250014071	NUT M8
N/1	Z0250008132CL	§ COFFEE OUTLET PIPE For the version with 1 turret
N/2	Z0250008135CL	PRO 2T COFFEE OUTLET PIPE For the version with 2 turrets
100	Z0250014000CL	COFFEE BREWER VARIFLEX D 45

www.rheavendors.com tel: 0039 02 966 551 fax: 0039 02 96 55 086 email: rheavendors@rheavendors.com exclusive property of rheavendors group

PROFESSIONAL BREWER GROUP D.36

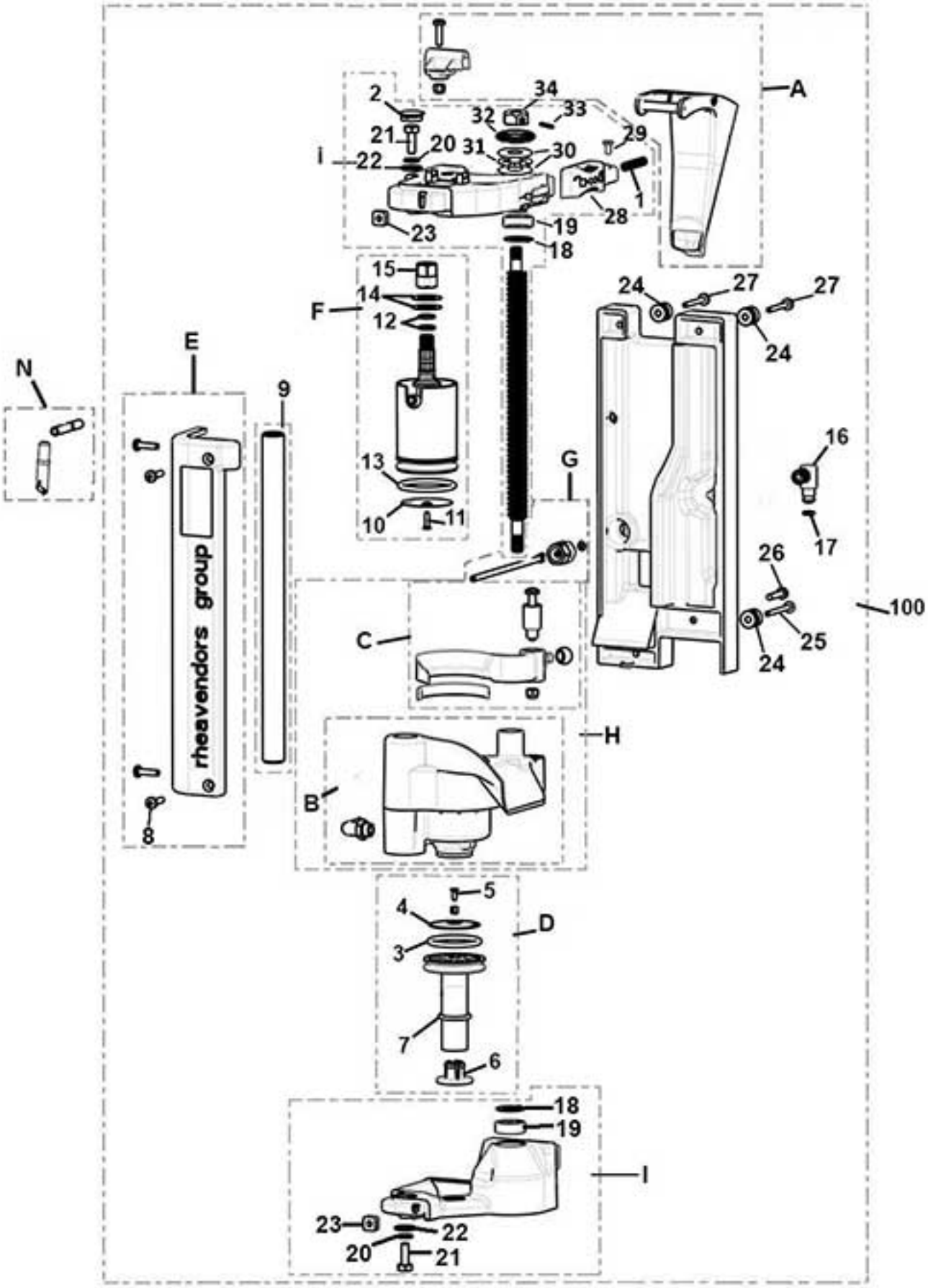

www.rheavendors.com tel: 0039 02 966 551 fax: 0039 02 96 55 086 email: rheavendors@rheavendors.com exclusive property of rheavendors group

PROFESSIONAL BREWER GROUP D.36		
Pos.	**Code**	**Description**
A	Z0250014033R	§ CHUTE D. 36
1	Z0250014081	SPRING
2	GUA0011022	PLUG
B	Z0250014032R	§ INFUSION CHAMBER D.36 included internal components and elbow
C	Z0250014034R	§ BRUSH D.36
D	Z0250014038R	§ LOWER FILTER HOLDER D.36
3	GUA0000080	OR 4112 RED SILICONE LSR70
4	Z0250008019	COFFEE FILTER
5	VIT0000121	SCREW COUNT FLAT HEAD M3X8
6	Z0250014027R1	LOWER PISTON LOCK+SET SCREW
7	GUA0000103	OR 3075 SILICON
E	Z0250014019R	§ FRONTAL COVER
8	VIT0001009	SCREW HEAD TAP CAP M4X16
9	Z0250014013	
F	Z0250014040R	§ UPPER FILTER HOLDER D.36
10	Z0250008099	COFFEE FILTER 33,4
11	VIT0000129	SCREW COUNT HEAD M3X12
12	GUA0000045	OR 108 VITON 80 BLACK
13	GUA0000080	OR 4112 RED SILICONE LSR70
14	Z0250014048	SPRING
15	Z0250014086	NUT
16	Z0250014085	MALE CONNECTOR
17	GUA0000004	OR 104 NBR AL 75 BLACK
G	Z0250014086R	§ WATER INLET TUBE 0,15 mt
H	Z0250014030R	§ CHAMBER D.36
I	Z0250014005R2	§UPPER SUPPORT WITHOUT CHUTE
L	Z0250014012R	§ LOWER SUPPORT
18	Z0250014077	SPACER
19	VIT0009320	BEARING
20	VIT0003113	SPRING WASHER 6,4
21	VIT0000249	SCREW HEX HEAD M6X16
22	Z0250014079	WASHER D.15 D.6,5 SP.1,5
23	VIT0009112	NUT M4
24	Z0250014072	PIN
25	VIT0000033	SCREW HEAD TAP CAP M4X35
26	VIT0001011	SCREW HEAD TAP CAP M4X20
27	VIT0001006	SCREW HEAD TAP CAP M4X30
28	Z0250014082	BREWER STOPPER BUTTON
29	VIT0002009	SCREW ST HEAD CAP M3.5X6.5
30	VIT0009318	SPACER WASHER
31	VIT0009317	BEARING
32	GUA0001007	V RING GASKET VA16
33	VIT0007011	SET SCREW 4X4
34	Z0250014071	NUT M8
N/1	Z0250008132CL	§ COFFEE OUTLET PIPE For the version with 1 turret
N/2	Z0250008135CL	PRO 2T COFFEE OUTLET PIPE For the version with 2 turrets
100	Z0250014060CL	§ COFFEE BREWER VARIFLEX D.36

www.rheavendors.com tel: 0039 02 966 551 fax: 0039 02 96 55 086 email: rheavendors@rheavendors.com exclusive property of rheavendors group

product containers (version E6)

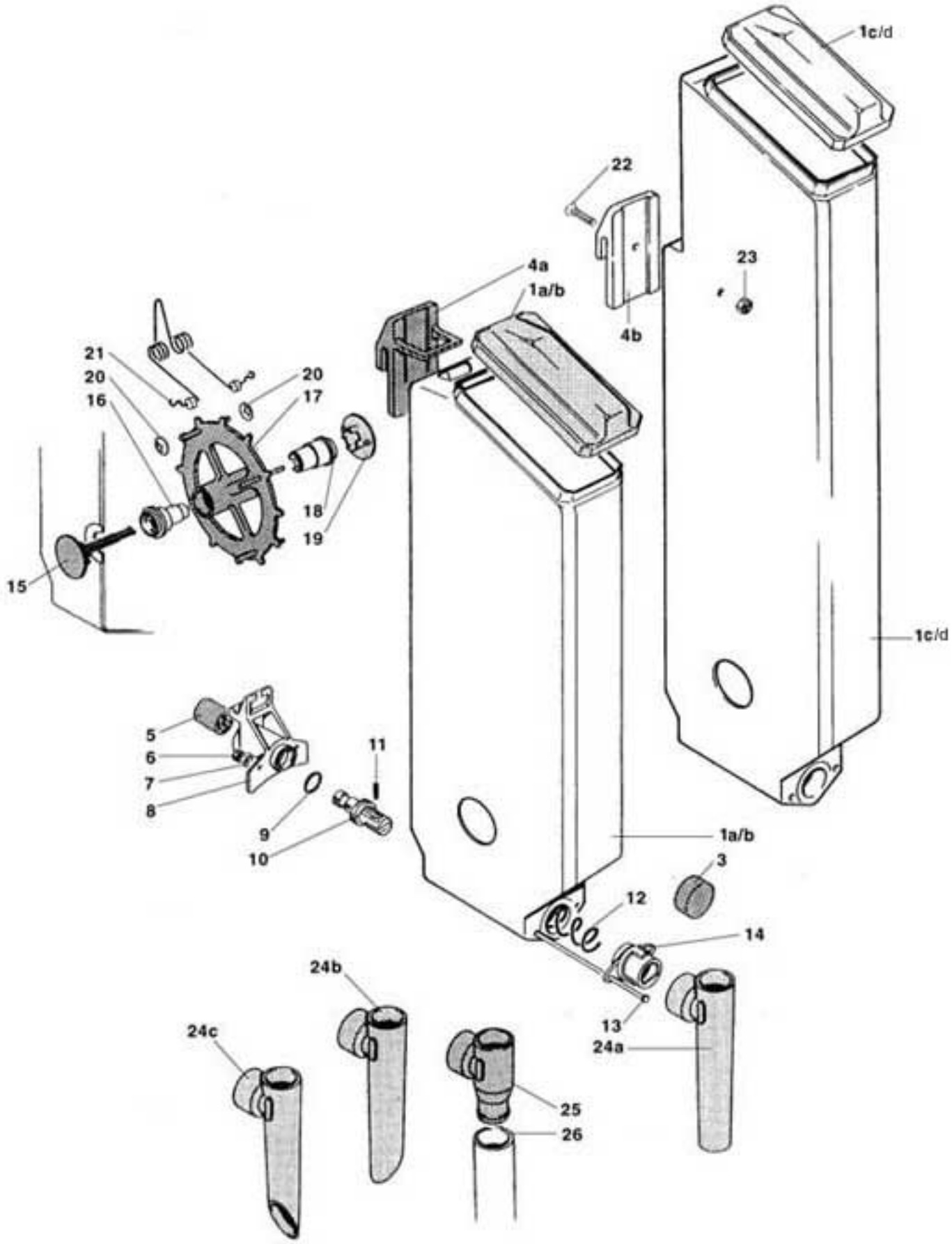

www.rheavendors.com tel: 0039 02 966 551 fax: 0039 02 96 55 086 email: rheavendors@rheavendors.com exclusive property of rheavendors group

product containers (version E6)		
Pos.	**Code**	**Description**
1/a	70003001AR	§ CANISTER "A"+LID
1/b	70003001BR	§ CANISTER "B"+LID
1/c	Z0230008003AR	§ CANISTER W/HOLE H.650+LID
1/d	Z0230008003BR	§ CANISTER W/O HOLE H.650+LID
3	4002050109AD	INGREDIENT CHUTE PLUG
4/a	70003003	FIX PLATE
4/b	Z0230012018	FIX PLATE
5	Z0230012012	SQUARED PINION
6	VIT0004803	NUT M4
7	VIT0003202	WASHER 4,3X9X0,8
8	70003006	REAR BUSH
9	GUA0000015	OR 119 NBR AL 75 BLACK
10	Z0230012006	SPIRAL WITH FLANGE
11	VIT0005106	PIN 2X14
12/a	70003016	SPIRAL 18
12/b	Z0230024009	SPIRAL 9
13	70003010	BUSH CONNECTOR
14/a	70003008	FRONT BUSH
14/b	70003007	FRONT BUSH
14/c	Z0230012025	FRONT BUSH-REDUCED TRANSITION
15	70003028	PIN
16	70003027	BUSH
17	70003012	WHEEL (PLASTIC)
18	70003026	BUSH
19	70003029	DISK
20	VIT0007102	BENZING CLIP
21	11837	PRODUCT AGITATOR
22	VIT0001205	SCREW COUNT FLAT HEAD M4X12
23	VIT0004810	NUT M4
24/a	4001003072/20R1	§ PROD.CHUTE FRONTAL WHITE
24/b	4001003072/22R1	§ INGREDIENT CHUTE-LEFT WHITE
24/c	4001003072/21R1	§ INGREDIENT CHUTE-RIGHT WHITE
25	Z0230016024	SUGAR CHUTE
26/a	TSIL15/19T-10	SILICON HOSE 15X19 MT.10
100	Z0230017007R	§ CANISTER WHEEL 9
101	Z0230016006R	§ CANISTER SPIRAL 9
102	Z0230018009R	§ CANISTER AGITATOR 18
103	Z0230019005R	§ CANISTER AGITATOR 9-THE
104	Z0230017008R	§ CANISTER WHEEL 18
105	Z0230008019R	§ CANISTER H.650 SPIRAL 18+LID
106	Z0230008010R	§ CANISTER H.650 SPIRAL 18+LID

www.rheavendors.com tel: 0039 02 966 551 fax: 0039 02 96 55 086 email: rheavendors@rheavendors.com exclusive property of rheavendors group

product containers (version E7)

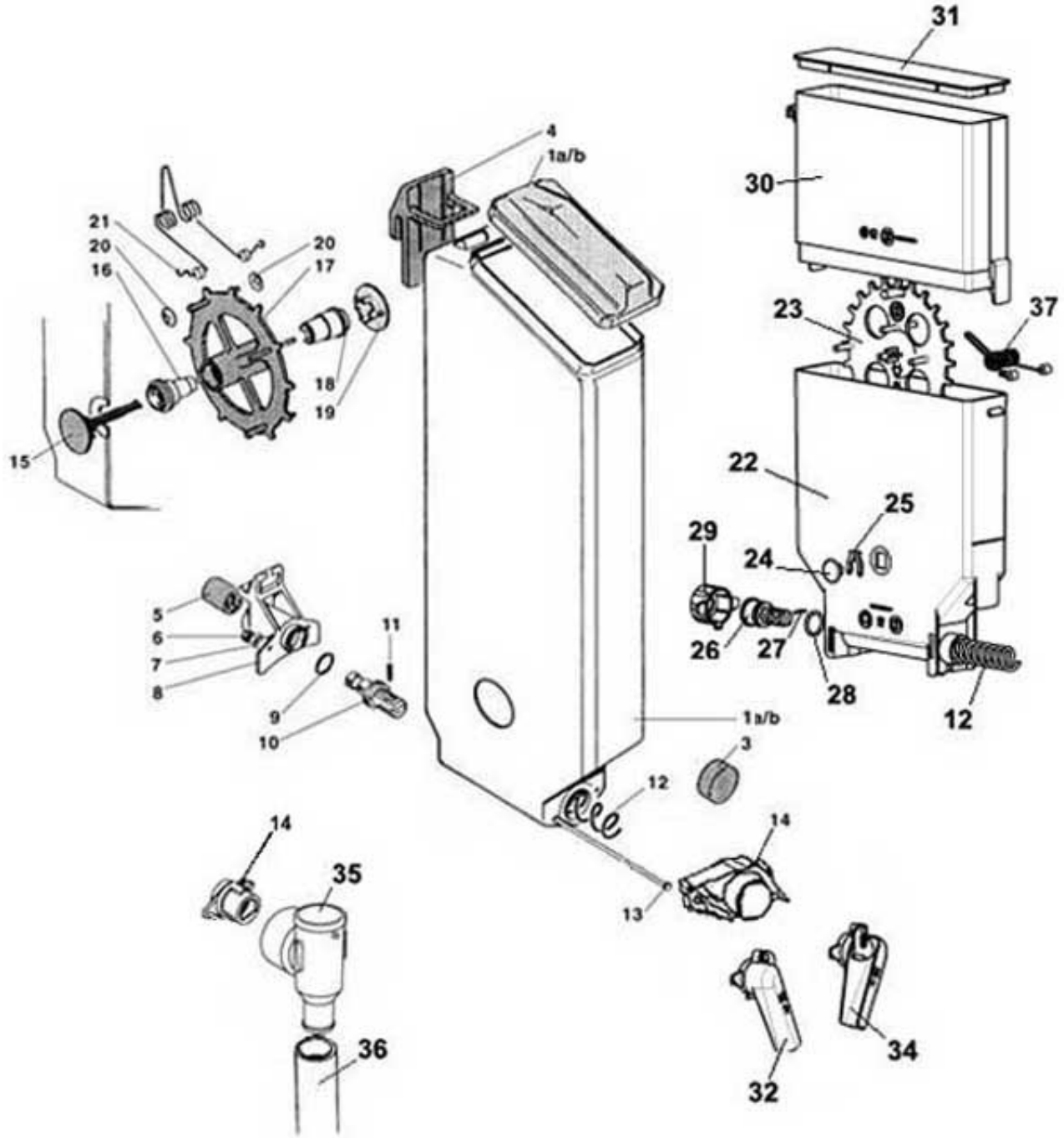

www.rheavendors.com tel: 0039 02 966 551 fax: 0039 02 96 55 086 email: rheavendors@rheavendors.com exclusive property of rheavendors group

product containers (version E7)		
Pos.	**Code**	**Description**
1/a	70003001AR	§ CANISTER "A"+LID
1/b	70003001BR	§ CANISTER "B"+LID
3	70003061	SUGAR CHUTE PLUG
4	70003003	FIX PLATE
5	Z0230012012	SQUARED PINION
6	VIT0004803	NUT M4
7	VIT0003202	WASHER 4,3X9X0,8
8	70003006	REAR BUSH
9	GUA0000015	OR 119 NBR AL 75 BLACK
10	Z0230012006	SPIRAL WITH FLANGE
11	VIT0005106	PIN 2X14
12/a	70003016	SPIRAL 18
12/b	Z0230030014	SPIRAL 18
12/c	Z0230024009	SPIRAL 9
12/d	Z0230030013	SPIRAL 9
13	70003010	BUSH CONNECTOR
14/a	Z0230016105	PRODUCT CHUTE ADAPTER
14/b	70003008	FRONT BUSH For SUGAR
15	70003028	PIN
16	70003027	BUSH
17	70003012	WHEEL (PLASTIC)
18	70003026	BUSH
19	70003029	DISK
20	VIT0007102	BENZING CLIP
21	11837	PRODUCT AGITATOR
22	Z0230030233	INGREDIENT CANISTER 54 265
23	Z0230030236AB	§ WHEEL MM54
24	Z0230030238-02	WHEEL PIN
25	Z0230030239	WHEEL PIN FORK
26	Z0230030012	SPIRAL PIN
27	VIT0005106	PIN 2X14
28	GUA0000083	OR 123 RED SILICONE A70
29	Z0230030011	REAR BUSH
30	Z0230030274	CANISTER EXTENSION
31	Z0230030006	CANISTER 55 LID
32/a	Z0230030187R	§ INGREDIENT CHUTE-RIGHT RED
32/b	Z0230030198R	§ INGRED. CHUTE-RIGHT ORANGE
34/a	Z0230030186R	§ INGREDIENT CHUTE-LEFT RED
34/b	Z0230030197R	§ INGREDIENT CHUTE-LEFT ORANGE
35	Z0230016024	SUGAR CHUTE
36/a	TSIL15/19T-10	SILICON HOSE 15X19 MT.10
37	Z0230030060-05	PRODUCT AGITATOR
100	Z0230030277R	§ CANIS. 54-265 WHEEL18 W/LID For GINSENG and BARLEY
101	Z0230030275R	§ CANIS. 54-265 WHEEL9 W/LID For DECAFFEINATED
102	Z0230016006R	§ CANISTER SPIRAL 9 For SUGAR
103	Z0230018012R	§ CANISTER AGITATOR 18 For CHOCOLATE
104	Z0230019012R	§ CANISTER AGITATOR 9-THE For TEA

www.rheavendors.com tel: 0039 02 966 551 fax: 0039 02 96 55 086 email: rheavendors@rheavendors.com exclusive property of rheavendors group

product containers (version E7)		
105	Z0230017012R	§ CANISTER WHEEL 9 For MILK

www.rheavendors.com tel: 0039 02 966 551 fax: 0039 02 96 55 086 email: rheavendors@rheavendors.com exclusive property of rheavendors group

coffee beans container

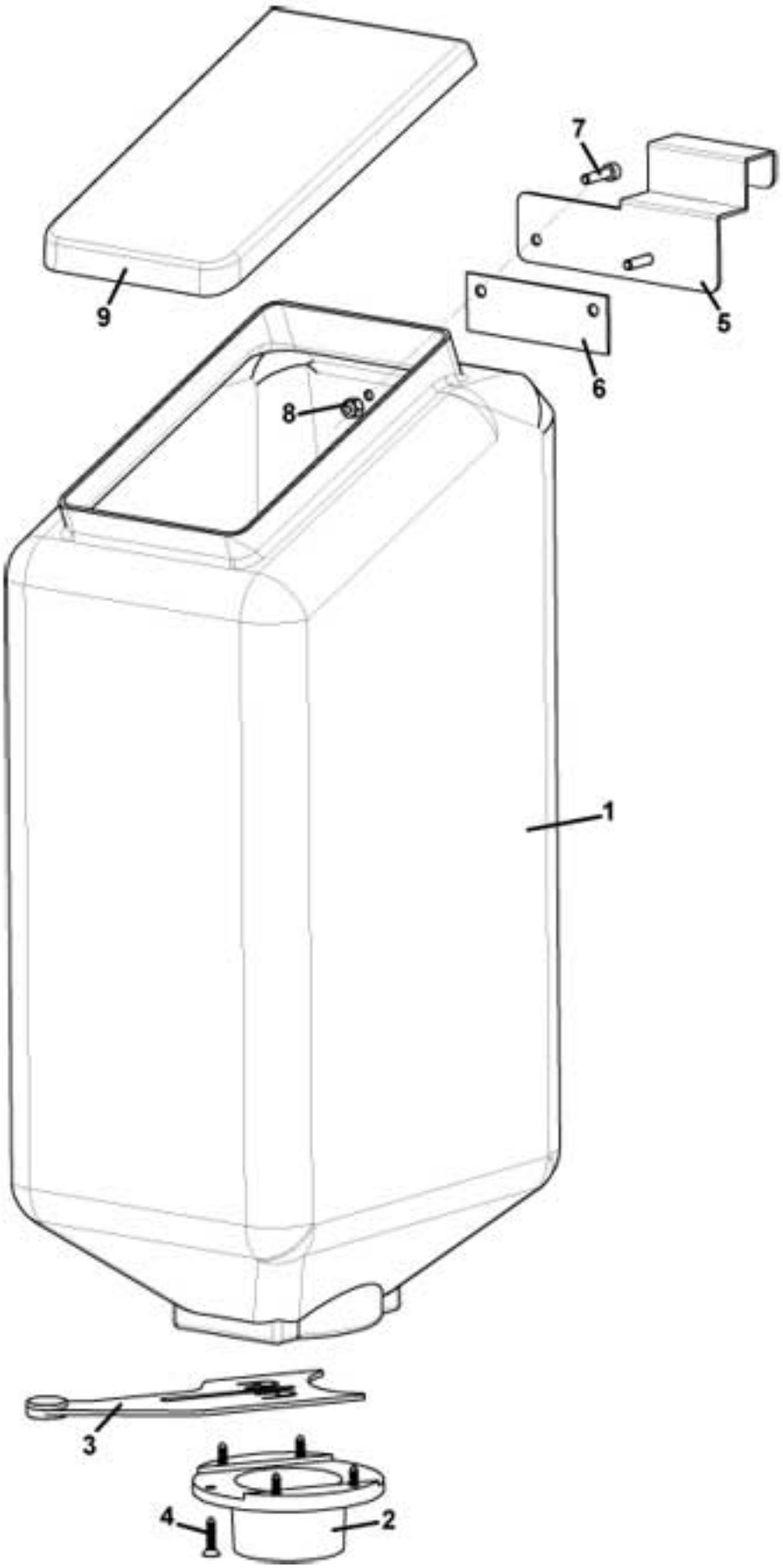

www.rheavendors.com tel: 0039 02 966 551 fax: 0039 02 96 55 086 email: rheavendors@rheavendors.com exclusive property of rheavendors group

coffee beans container		
Pos.	**Code**	**Description**
1	Z0230030442	COFFEE BEANS HOPPER 2 GRINDER
2	Z0230030449NA	COFFEE BEANS HOPPER STOPPER
3	Z0230015207IC	COFFEE BEANS HOPPER STOPPER
4	VIT0002104	SCREW COUNT FLAT HEAD M3.9X16
5/a	Z0230030478	COFFEE BEAN HOPPER BRACKET For the E6 version
5/b	Z0230030473	COFFEE BEAN HOPPER BRACKET For the E7 version
6	Z0230030426	PLATE
7	VIT0005519	SCREW TCEI 4x12 STAIL STEEL
8	VIT0004810	NUT M4
9	Z0230015057	COFFEE BEANS HOPPER LID
100	Z0230030442R2	§ COFFEE BEANS HOPP. 1 GRIND.P

www.rheavendors.com tel: 0039 02 966 551 fax: 0039 02 96 55 086 email: rheavendors@rheavendors.com exclusive property of rheavendors group

control panel

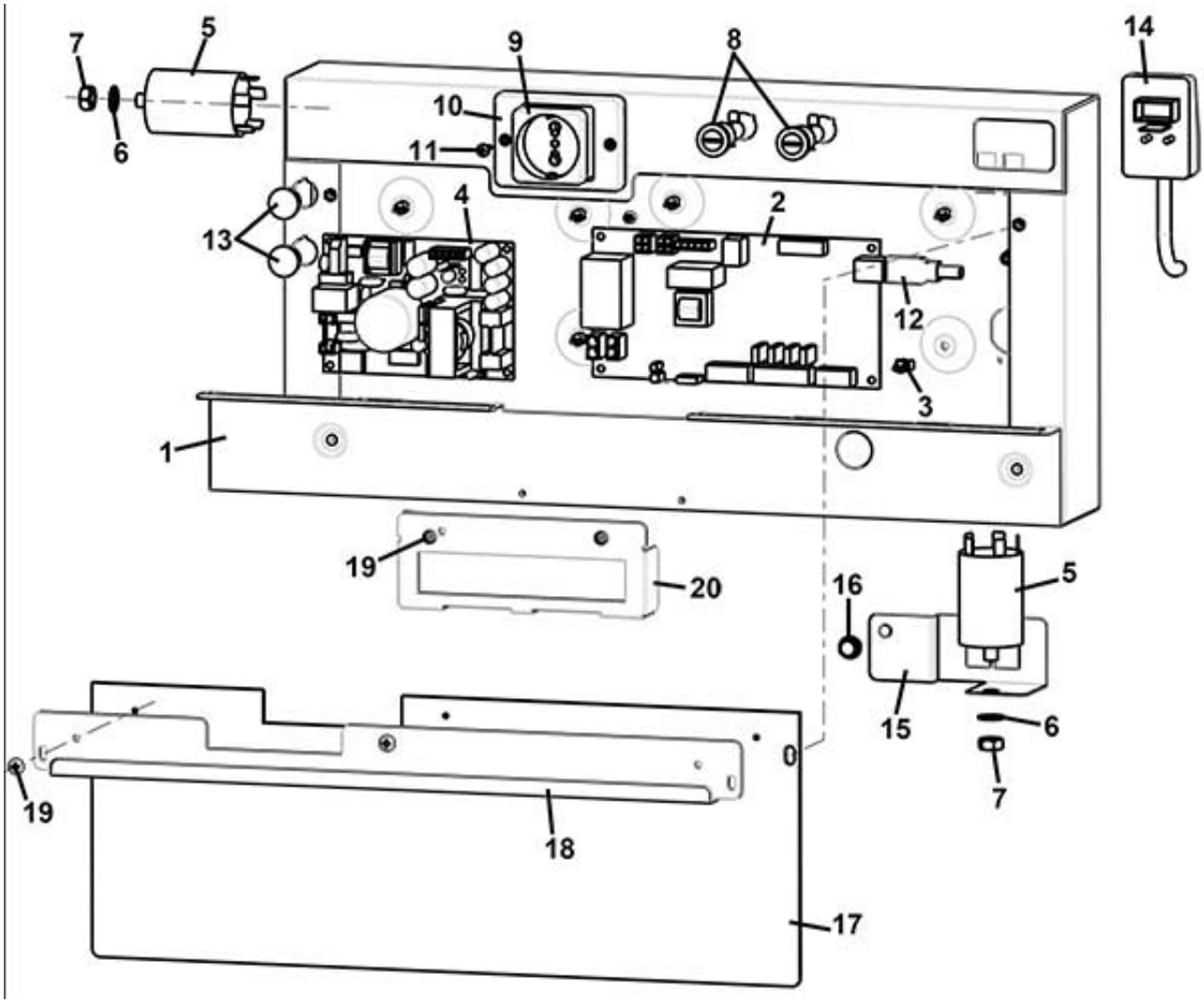

www.rheavendors.com tel: 0039 02 966 551 fax: 0039 02 96 55 086 email: rheavendors@rheavendors.com exclusive property of rheavendors group

control panel		
Pos.	**Code**	**Description**
1/a	Z0130012305-01	ELECTRICAL PANEL FRAME For the version with 1 turret
1/b	Z0130012325-02	CONTROL PANEL FRAME For the version with 2 turrets
2	SCH0007060	POWER BOARD
3	ELE0062003	BOARD SUPPORT
4	SCHA161001	SWITCHING BOARD
5	ELE0009055	NOISE FILTER 16A
6	VIT0003106	WASHER D.8,2
7	VIT0004506	NUT M8
8	ELE0003507CL	FUSE HOLDER+FUSE 12A
3	ELE0002319	MAINS SOCKET SCHUKO
10	ELE0002307	ELECTRIC SOCKET 2 POSITION
11	VIT0002004	SCREW ST HEAD CAP M3.5X13
12	ELT0030874	USB WIRING 1,5MT
13	GUA0011010	PLUG
14/a	ELE0055003CL	SUPPLY CABLE
14/b	ELE0055004CL	POWER LEAD-CH SOCKET
15	Z0130012231	FILTER SUPPORT
16	VIT0000236	SCREW HEX HEAD M6X11
17	Z0130012311	CONTROL PANEL COVER
18	Z0130012312	CONTAINER SUPPORT
19	VIT0002009	SCREW ST HEAD CAP M3.5X6.5
20	Z0132300008	EXTENSION CANISTER SUPPORT

www.rheavendors.com tel: 0039 02 966 551 fax: 0039 02 96 55 086 email: rheavendors@rheavendors.com exclusive property of rheavendors group

ROTATIVE PUMP

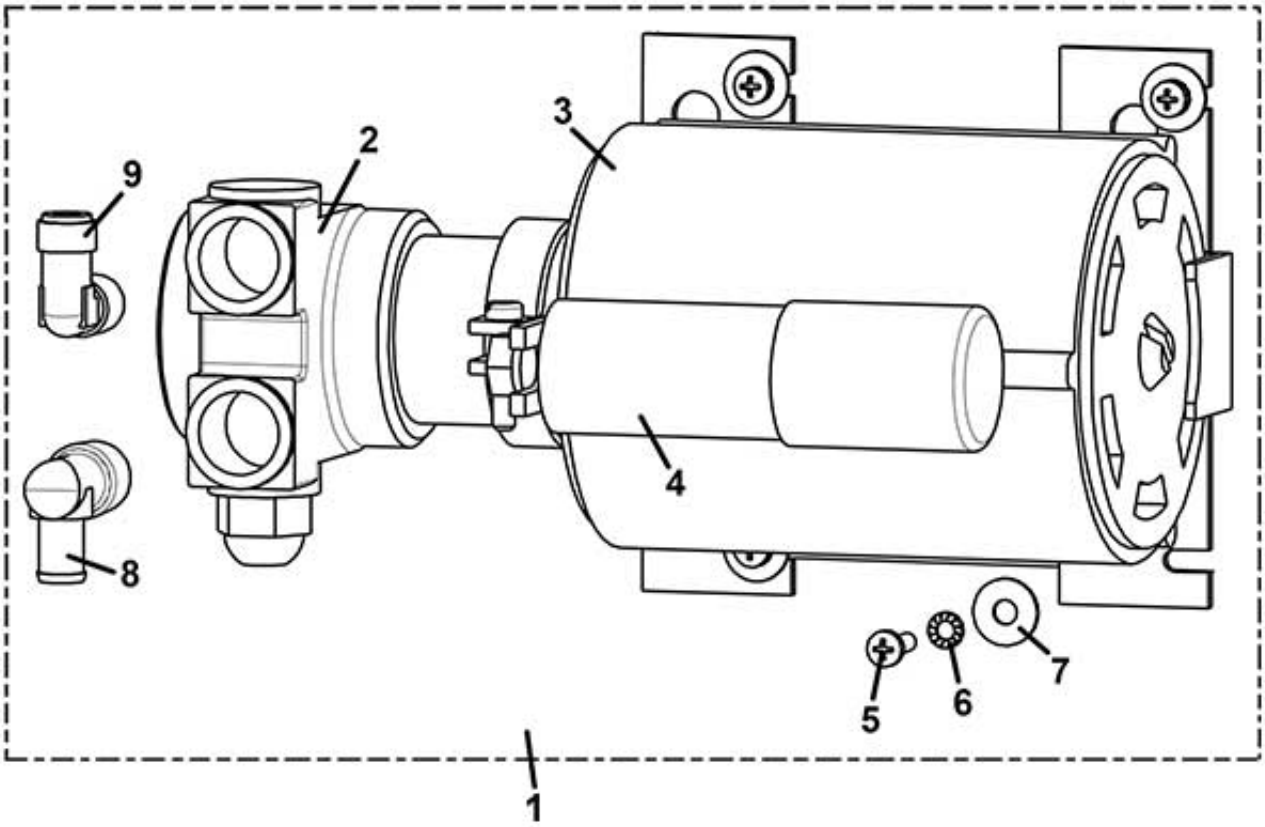

www.rheavendors.com tel: 0039 02 966 551 fax: 0039 02 96 55 086 email: rheavendors@rheavendors.com exclusive property of rheavendors group

ROTATIVE PUMP		
Pos.	**Code**	**Description**
1	Z0110004033R1	§ROTARY PUMP + ENGINE
2	Z0110004033/0	PROCON PUMP MOD.CB1521PX+CLAMP
3	Z0099003002	MOTOR 120W 230V 50 HZ 4P
4	ELE0009061	CAPACITOR 7
5	VIT0000013	SCREW HEAD TAP CAP M4X12
6	VIT0003103	SPRING WASHER 4,3
7	VIT0003301	WASHER 4,3X12X1,5
8	Z0100003013	ELBOW CONNECTOR
9	Z0100001022	ELBOW CONNECTOR 8-3/8-1/4

www.rheavendors.com tel: 0039 02 966 551 fax: 0039 02 96 55 086 email: rheavendors@rheavendors.com exclusive property of rheavendors group